The Naval Artificer's Manual

PATE

THE NAVAL ARTIFICER'S MANUAL

THE NAVAL ARTIFICER'S MANUAL

(THE NAVAL ARTIFICER'S HAND-BOOK REVISED)

TEXT, QUESTIONS AND GENERAL INFORMATION FOR DECK ARTIFICERS IN THE UNITED STATES NAVY

COMPILED AND ARRANGED BY
Assistant Naval Constructor (T.) McCALL PATE, U. S. N.

★

UNDER DIRECTION OF THE
BUREAU OF CONSTRUCTION AND REPAIR

★

ANNAPOLIS, MARYLAND
THE UNITED STATES NAVAL INSTITUTE
1918

THE NAVAL ARTIFICER'S MANUAL

Price, $2.00, postpaid

COPYRIGHT, 1918

BY

J. W. CONROY

Trustee for

U. S. NAVAL INSTITUTE

ANNAPOLIS, MD.

The Lord Baltimore Press

BALTIMORE, MD., U. S. A.

MANUAL FOR DECK ARTIFICERS.

(The "Naval Artificer's Hand-Book, 1914," Revised.)

Appertaining to the care and preservation of the hull and fittings, and the operation of auxiliary machinery on ships of the Navy. Containing elementary arithmetic, rules and tables of weights, measures, etc., weights and strengths of materials, rules for inspection of and descriptions of all kinds of lumber used in the Navy; descriptions of drainage, sanitary and ventilation systems, steering appliances including telemotors, oxy-acetylene welding, etc.; standard formulæ for mixing all kinds of paints used on iron and steel vessels. Examination questions pertaining to the different trades of Deck Artificers, glossary of technical and nautical definitions, etc.

Digitized by the Internet Archive
in 2026

https://archive.org/details/navalartificersm0000tmcc

PREFACE.

The NAVAL ARTIFICER'S MANUAL is a revised edition of the "Naval Artificer's Hand-Book, 1914," with much new matter added, including the rules for inspection of lumber, descriptions of various steering appliances including telemotors, water-ejecting system, acetylene welding, etc.

The "Naval Artificer's Hand-Book, 1914," was prepared at the request of the Bureau of Construction and Repair, to be used as a hand-book and text-book for Deck Artificers, in the extension of education for enlisted men, as set forth in Navy Department General Order, No. 63, dated December 16, 1913. While this order provided for supplying deficiencies in academic education to all enlisted men requiring it, it was considered advisable to include in this book, a chapter on the rudiments of arithmetic for convenience of reference, and because of the important relation this subject bears to the mechanical trades.

Robinson's Naval Construction was consulted in the preparation of definitions, formulæ pertaining to Naval Architecture, etc. A brochure on the "Proper Use of Tools," written by Mr. Wm. Deitz, formerly instructor in the Louisville, Ky., Industrial School, was, by kind permission of the author, freely consulted in preparing the article on Woodworking Hand Tools.

Grateful acknowledgment is made to Naval Constructor R. M. Watt, U. S. N., Industrial Manager at the Norfolk Navy Yard, and formerly Chief of the Bureau of Construction and Repair, for valuable suggestions and criticisms; also to Assistant Naval Constructor (T) Geo. J. Shaw, U. S. N., Instructor of Artificers at the Norfolk Navy Yard, for valuable assistance

rendered in the revision of this edition; also to Mr. N. E. Adamson, Jr., Assistant Shop Superintendent, who revised the chapter on Painting and contributed some valuable text. The many others connected with the Norfolk Navy Yard, who have rendered valuable assistance in various ways, are too numerous to mention individually here; and the author wishes to assure them of sincere appreciation for their services.

McC. P.

CONTENTS.

CHAPTER I.

PAGE

Arithmetic, including first four rules, tables of currency, weights, measures, etc. Metric system and equivalents. Fractions. Decimals. Proportion. Square and cube root. Formulæ. Mensuration. Elements of water. Strength and weights of materials. Practical problems pertaining to displacement, tons per inch immersion, etc..... 1-77

CHAPTER II.

Miscellaneous subjects pertaining to all trades represented in the Deck Artificer Branch. Method of numbering watertight compartments. Nomenclature of decks. Instructions for fitting draft marks and interior draft gages. How to read the draft of a ship. Instructions for making joints for watertight and oiltight work. Sounding compartments. Watertight doors and airports, care of. Auxiliary machinery. Anchor engine. Windlass and anchor handling on a modern battleship. Capstan. Ventilation. Docking and undocking in dry dock. Cofferdam for making repairs under water. Reading plans and drawings. Navy standard hatching and symbols of various metals. Cork ring life buoy. Colome's patent leak stopper, instructions for using. Steering engines and appliances, including hand, steam, electrical and hydro-electric, and telemotors, descriptions and instructions for operating. Anchors, standard plans and descriptions. Rope used in the Navy, tables of sizes, weights and strengths. Silver plating mirrors. Galvanizing. Drilling glass. Miscellaneous questions for all branches of deck artificers. Bells for ships and motor boats. Plimsoll mark. Gross and net tonnage of merchant cargo ships.....79-176

CHAPTER III.

PAGE

Instructions for carpenter's mates. Small boats of the Navy, including general descriptions, parts belonging to the hull, division of cognizance of parts, etc. Carrying capacity of small boats and method of computing same. Nomenclature of parts of motor sailing launch. Plan of 30-foot motor sailing launch. Spiling of plank for a boat. Method of laying off planking. Repairs to boats. Laying wooden decks. Pattern making. Scarfing. Method of laying off booms. Filing handsaws. Standard sizes of nails, tacks, brads, screws, etc. Woodworking hand-tools, descriptions and notes on their uses. Glueing. Making mortise and tenon. Navy standard oars. Position buoy. Anchor buoy. Chopping block. Coaling truck. Paying shell or pitch-ladle. Hasp. Lumber, descriptions of various kinds. Rules for piling lumber. Board feet, table. Navy Department specifications for various kinds of lumber. Instructions for inspecting lumber. Questions for carpenter's mates and shipwrights.....177-340

CHAPTER IV.

Instructions for shipfitters. Care of portable fittings. Red lead gun. Calking (metal). Pneumatic tools, care of. Oxy-acetylene welding and cutting. Rudder head. Sea valves. Laying off shell plate by template. Riveting. Types of rivets. Shapes and other material used in shipbuilding, specifications. Zinc and steel protectors for sea chests. Questions for shipfitters.....341-468

CHAPTER V.

Instructions for plumbers and fitters. Pipe fitting. Pipe and fittings, dimensions and specifications, tables. Hose valves, fittings and parts. Reseating and grinding valves. Soldering. Wiping joints. Brazing. Pumping and drainage of ships. Air testing compartments. Magazine and trimming tank flooding systems. Firemain and flushing systems. Freshwater system. Trimming tanks. Plumbing system proper. Galvanic action. Instructions for leadlining pipe. Questions for plumbers and fitters. Glossary of terms used in pipefitting, with definitions.....469-645

CHAPTER VI.

PAGE

Instructions for blacksmiths. Oil-burning forge. Metals worked in forges. Blacksmith tools. Forging. Shrinking. Chain-making. Navy standard chain. Dip ropes. Clear hawse pendants. Chain hooks. Welding. Fluxes. Case-hardening. Tempering. Blacksmith tongs. Questions for blacksmiths 647-687

CHAPTER VII.

Instructions for painters. Requisitions and test reports of paints. Cleaning metal surfaces. Painting machinery. Outside painting. Boot-topping. Colors for different types of vessels. Painting ships' boats. Painting aircraft. Inside painting. Bituminous compositions. Cork painting. Soft and hardwood painting. Standard colors for piping. Cementing. Formulæ for all kinds of paints. Paint brushes, care of. Varnish. Materials and painting practices of the Navy. Questions for painters.....689-774

CHAPTER VIII.

Promotions in artificer branch. Pay of artificer branch. Qualifications for carpenter and chief carpenter's mate. Glossary of nautical and mechanical terms, with definitions 775-783

THE NAVAL ARTIFICER'S MANUAL.

CHAPTER I.

EXPLANATIONS OF CHARACTERS, ABBREVIATIONS, ETC., AND ARITHMETIC.

Explanation of characters, abbreviations and nautical terms used in this book:.

$=$ .....Equal to, signifies equality, as $12'' = 1'$.

$+$ .....Plus, when placed between two figures signifies that they are to be added together.

$-$ .....Minus, when placed between two figures signifies that the latter is to be subtracted from the former.

$\times$ .....The sign of multiplication

$\div$ .....The sign of division.

$: ::$ .....The signs of proportion, meaning "is to" and "as," thus $2 : 4 :: 4 : 8$, reads 2 is to 4 as 4 is to 8.

$\surd$ .....The radical sign, indicates that some root of the quantity to the right is to be taken.

$\overline{\quad}$ .....Vinculum,
( ) .....Parentheses,
[ ] .....Brackets,
$\{\}$ .....Braces.

} Signs of aggregation, indicating that two or more numbers enclosed are treated as one quantity.

As $\overline{2 \times 2}$ or $(2 \times 2) = 4$, etc.

$''$ .....Inch or inches.

$'$ .....Foot or feet.

$^\circ$ .....Degree; there are 360° in a circle.

% .....Per cent.

\# .....When used in connection with iron or steel plate for shipbuilding, denotes weight per square foot; *example*: 20# plate would mean a plate weighing 20 pounds to the square foot. This character is also used as a sign for No., or number, in marking parts of work that are gotten out in large numbers at the same time to be assembled later.

cu. in. .....Cubic inches.
cu. ft. .....Cubic feet.
sq. in. .....Square inches.
sq. ft. .....Square feet.
sq. yd. .....Square yard.
oz. .....Ounce.
lb. .....Pound.
T. .....Ton.
gi. .....Gill.
pt. .....Pint.
qt. .....Quart.
gal. .....Gallon.
aft or abaft...After part of a ship.
athwartship ..An imaginary line running at right angles to the fore-and-aft line.
compt. .....Compartments, one of the divisions of a ship.
for'd .....Forward part of a ship.
fore-and-aft ..An imaginary line running from the bow to the stern of a ship.
B. M. .....Board measure, meaning the number of board feet in a quantity of lumber; a board foot is the commercial unit of lumber, being 1 foot long, 1 foot wide, and 1 inch thick.
W. C. .....Water-closet.
W. L. .....Water-line.
W. T. .....Water-tight, as W. T. compt., water-tight compartment.

Arithmetic.

Arithmetic is the essential science of the mechanic, no matter what his trade may be; and no mechanic can successfully and independently perform the operations of his trade unless he knows at least the rudiments of this important subject.

An effort is made in this chapter, to concisely outline such of the fundamental principles of arithmetic, as will be found convenient for reference and most useful and applicable to the various trades represented in the Deck Artificer Branch of the Navy.

A review will not be amiss to those once familiar with the subject, while those who are not should endeavor, by diligent study, to become so.

NOTATION AND NUMERATION.

A unit is a single thing, a determinate quantity or amount of anything which has been adopted as a standard of measurement, as 1 foot, of length; 1 mile, of distance; 1 gallon, of liquid. One foot board measure is the unit of lumber, being 1 foot square, 1 inch thick, and contains 144 cubic inches.

A number is one or more units.

An abstract number is a number not giving the nature of the unit represented, as 3, 89, 155, 6758, are abstract numbers.

A concrete number gives the nature of units represented, as 3 pounds, 99 miles, 155 feet, 6758 tons, etc.

A simple number expresses a unit or collection of units of the same denomination, as 3 pounds, 4 miles, 5 tons, etc.

A compound number is a number containing units of two or more denominations, but of the same nature or kind, as 4 feet 3 inches, 6 pounds 2 ounces.

Notation is the process of writing numbers either with figures or letters.

Numeration is the process of reading numbers which have been expressed by figures or letters.

Figures are characters or marks which represent numbers. There are ten figures in the Arabic notation, 1, 2, 3, 4, 5, 6, 7, 8, 9, 0, which may be arranged in combinations to represent numbers of any desired magnitude.

To insure accuracy of numeration, numbers are divided into "Places" and "Periods." A lone figure occupies the first place, and shows the number of units in the first period, as 9, which is the greatest number of units that can be expressed with one figure.

A figure with another to its right occupies the second place, and shows the number of tens in the first period, as 99, which is the greatest number of units that can be expressed with 2 figures. A figure with two others to its right occupies the third place, and shows the number of hundreds in the first period, as 999, which is the greatest number of units that can be expressed with three figures.

The three places hundreds, tens and units constitute a period; the periods, beginning at the right, are designated as follows: Units, thousands, millions, billions, trillions, etc. The following diagram will show the method of reading numbers:

Periods.....	Trillions.			Billions.			Millions.			Thousands.			Units.		
	hundreds	tens	units	hundreds	tens	units	hundreds	tens	units	hundreds	tens	units	hundreds	tens	units
Places.....	4	6	8,	3	2	9,	1	0	7,	5	4	3,	6	8	2,

which is read four hundred sixty-eight trillion, three hundred twenty-nine billion, one hundred seven million, five hundred forty-three thousand, six hundred eighty-two.

Rule for reading numbers:

Beginning at the right point off the figures into groups or periods of three places each. Begin at the left and read each period as if it was a separate number, giving the name of the period. Periods or places represented by ciphers only not read.

Final "S" is omitted in reading the names of periods, and the word "and" should not be used in reading any whole number; sometimes for euphony, the word "and" is used in the first period between hundreds and tens, as 1782 may be read, one thousand seven hundred and eighty-two.

ADDITION.

Addition is the process of finding the sum of two or more numbers.

The sign of addition is + plus, which means more or added to, thus 3+4=7. Three plus four or three and four equals seven.

Rule: Write the numbers so that figures of the same places and periods stand in the same columns, units under units, tens under tens, etc., beginning at the right add the column of units first, if the sum be less than ten write it under that column, and so on taking the column of tens next. If the sum of any column equal or exceed ten, write the figure representing units in the sum under that column, and add the tens with the units in the next column. Write the entire sum of the left hand or last column.

Example:

755863
972811
431172

2159846

Only numbers of the same denomination, and units of the same place and period, can be added.

SUBTRACTION.

Subtraction is the process of taking one number from another, or a part from the whole, finding the difference between two numbers.

The sign of subtraction is − minus, which means less or to be reduced by. Thus, 7−4=3, reads seven minus four equals three.

The minuend is the number from which the other is to be taken.

The subtrahend is the number to be taken away from the greater.

The remainder is the result, or that part of the greater number which is left, after the subtraction.

Parentheses ( ) are sometimes used to denote that two or more numbers enclosed are complete as a single quantity in the operation, as $(3+4)-2=5$, reads three plus four minus two equals five.

Rule: Write the lesser number under the greater, units under units, tens under tens, etc. Beginning at the right, take the lower number from the upper, in successive order, and write the result underneath. If any number in the minuend be less than the number to be subtracted, add 10 to it, and proceed to subtract, add 1 then to the next number in the subtrahend, and proceed as before.

Example:

9384
2193
7191

MULTIPLICATION.

Multiplication is the process of taking or repeating one number as many times as there are units in another.

The multiplicand is the number to be repeated or taken.

The multiplier is the number which shows how many times the other number (multiplicand) is to be taken or repeated.

The product is the result of the operation, and is the sum of the multiplicand added to itself as many times as there are units in the multiplier.

The sign of multiplication is $\times$, and, when placed between two numbers, represents the words "times" or "multiplied by," as $4\times8=32$, is read four times eight equals thirty-two.

The numbers multiplied together giving the product are called the factors of the number produced, in the above example 4 and 8 are the factors of 32.

Rule: When the multiplier is only one figure, write it under the right-hand figure of the number to be multiplied, and draw a line underneath; beginning at the right, multiply each figure

separately, putting the units of the result directly under its respective figure below the line, and add the tens of the result to the product of the next figure multiplied, continue this successively until the last figure is multiplied, the result of which is written in full.

Example:

3046
6
18276

When the multiplier consists of two or more figures, write it under the multiplicand, units under units, tens under tens, etc. Multiply first by the number of units in the multiplier as above, then by the number of tens, placing the first figure of this result under the column of tens of the partial product, then by the number of hundreds, placing the first figure of this result under the column of hundreds of the first partial product, and so on till the multiplicand has been multiplied by each figure in the multiplier; after which draw a line under these partial products and add them together as they stand, the sum will be the complete product.

Example:

3046	Multiplicand.
286	Multiplier.
18276	Partial product, Units.
24368	Partial product, Tens.
6092	Partial products, Hundreds.
871156	Product.

DIVISION.

Division is the process of finding how many times one number is contained in another.

The number to be divided is called the dividend.

The number by which the dividend is to be divided is called the divisor.

The result obtained by dividing is called the quotient.

The sign of division is ÷ and is read "divided by" thus, $28 \div 4 = 7$, reads 28 divided by 4 equals 7. Another form of indicating division is to place the dividend above a line and the divisor directly under it, below the line, thus $\frac{28}{4} = 7$. This method is used for condensing the operation, in expressing formulæ where the analysis of a problem, as in algebra or geometry, is shown, and when two or more numbers, characters or elements are computed as a single number to be divided; thus,

$$\frac{8+4}{6-3} = 4, \text{ reads, } \frac{8+4}{6-3} = \frac{12}{3} = 12 \div 3 = 4.$$

This form also shows, in a simple manner, the fundamental principles of fractions. The value of a fraction is always the number above the line divided by the number below the line, as

$$\tfrac{1}{2} = 1 \div 2 = \tfrac{1}{2}.$$

Rule for Division: At the left of the dividend, write the divisor with a curved line between them; if the divisor is less than 12 the operation is called short division, and a line is drawn under the dividend, under which the quotient is to be written. If the divisor is greater than 12 the operation is long division, in which case a curved line is drawn to the right of the dividend, where the quotient is to be written.

Short Division: Beginning at the left of the dividend, select the least number of consecutive figures that will make a number in which the divisor is contained, divide and place this, the first result, under the unit place of the dividend under the line. Should the divisor be contained a fraction of itself more than a complete number, prefix this remainder before the next consecutive figure in the dividend and proceed as before. Any remainder of the last result is a fraction of the divisor, and should be so written.

Example:

$$12\overline{)398425}$$
$$33202\tfrac{1}{12}$$

Long Division: Proceed as above, placing the figure of the result to the right of the dividend, multiply the divisor by this figure, placing the product under the group of figures in the dividend which have just been divided, subtract and bring down the next successive figure in the dividend, placing it at the right of this remainder to make the next group to be divided. Should any figure when brought down, not make a number greater than the divisor, write a cipher in the quotient, bring down the next number, and then divide; continue this till all figures of the dividend are brought down and divided, any remainder of the last result is a fraction of the divisor, and is so written:

Example:

$$
\begin{array}{r}
122)245368(2011\tfrac{26}{122} \\
244 \\
\hline
136 \\
122 \\
\hline
148 \\
122 \\
\hline
26
\end{array}
$$

This operation may be verified by multiplying the quotient by the divisor, the product of which should be the dividend. The following are proofs of the above examples:

$$
\begin{array}{r}
33202\tfrac{1}{12} \\
12 \\
\hline
398425
\end{array}
\qquad\qquad
\begin{array}{r}
2011\tfrac{26}{122} \\
122 \\
\hline
4022 \\
4022 \\
2011 \\
\hline
245342 \\
26 \quad \text{Remainder added.} \\
\hline
245368
\end{array}
$$

COMPOUND OR DENOMINATE NUMBERS.

Compound or denominate numbers are numbers having units of different denominations but of the same nature or kind, as 3 miles, 50 yards, 20 feet and 6 inches is a compound or denominate number, the units here are of different denominations, being miles, yards, feet and inches, while the nature of the number is the same, being that of length or distance.

The elements expressed in compound or denominate numbers are money or currency, length or distance, area, volume, liquid measure, weight, etc. The following tables giving the various units and denominations of these elements should be memorized.

Currency, Measures, Weights, Etc., Tables.

United States Money.

10 mills	make	1 cent.
10 cents	"	1 dime.
10 dimes	"	1 dollar.

English Money.

				U. S. Money.
4 farthings (far.)	make	1 penny	(d.)	= about 2 cents.
12 pence	"	1 shilling	(s.)	= about 24 cents.
20 shillings	"	1 pound	(£)	= about $4.87.

French Money.

				U. S. Money.
10 millimes (m.)	make	1 centime	(ct.)	= to about 2 mills.
10 Centimes	"	1 decime	(dc.)	= to about 2 cents.
10 Decimes	"	1 franc	(fr.)	= to about 20 cents.
20 Francs	"	1 Louis		= to about $4.00.
5 Francs				= to about $1.00.
50 Centimes				= to about 10 cents.
25 "				= to about 5 cents.
1 Sou or 5 centimes				= to about 1 cent.

Approximate relative value of the monetary unit of the principal foreign countries with U. S. money. Fluctuations occur from time to time, but for small sums exchanges are usually made as follows:

Country.	Monetary Unit.	Value in U. S. Money.
Austria-Hungary	Crown	$ .20
Brazil	Milreis	.55
Canada	Dollar	1.00
China	Tael	.70
China	Dollar Mex.	.47
Denmark	Crown	.27
Germany	Mark	.24
Greece	Drachma	.20
Italy	Lira	.20
Norway	Crown	.27
Panama	Balboa	1.00
Philippines	Peso	.50
Portugal	Escudo	1.00
Russia	Ruble	.50
Spain	Peseta	.20
Sweden	Crown	.27

Linear Measure, United States.

12	inches (in.) or (″)	make 1 foot (ft.) or (′).
3	ft.	make 1 yard (yd.).
6	ft.	make 1 fathom (fath.).
1760	yds.	make 1 mile, land.
2026¾	yds.	make 1 nautical mile.
1	nautical mile	makes 1⅛ land miles.

Equivalents of International Meter.

1 centimeter = 0.3937 inches.
1 meter = 3.28 feet or 1.094 yards.
1 kilometer = 0.621 statute miles or 0.5396 nautical miles.

Anchor Chain.

15 fathoms	make 1 shot.
120 fathoms	" 1 cable length = 720 feet.

Paper.

24 sheets	make	1 quire.
20 quires	"	1 ream.
2 reams	"	1 bundle.
5 bundles	"	1 bale.

Weight (Avoirdupois).

16 ounces (oz.)	make	1 pound (lb.).
100 lbs.	"	1 hundredweight (cwt.).
2000 lbs.	"	1 ton (short).
2240 lbs.	"	1 ton (long).

The long ton is used in weighing coal and estimating the tonnage of ships.

1 liquid gal. contains 231 cu. in.
1 cu. ft. contains 7.4005 gals. (roughly $7\frac{1}{2}$).
1 cu. ft. fresh water weighs about 62.4 lbs.
1 cu. ft. sea water weighs about 64.3 lbs.
1 gal. fresh water weighs about 8.4 lbs.
35 cu. ft. sea water = 1 ton, long (very closely).
36 cu. ft. fresh water = 1 ton, long (very closely).

Tables.

METRIC SYSTEM.

Length.

10 millimeters (mm.)	= 1 centimeter (cm.).
10 cm.	= 1 decimeter (dm.).
10 dm.	= 1 meter (m.)
10 m.	= 1 dekameter (dkm.).
10 dkm.	= 1 hectometer (hm.).
10 hm.	= 1 kilometer (km.).

Surface.

The surface measures are the squares of the linear measures, but for land measures 100 square meters are called an "ar."

100 ars (a.) = 1 Hectare (ha.).

Capacity.

10 milliliters (ml.)	= 1 centiliter (cl.).
10 cl.	= 1 deciliter (dl.).
10 dl.	= 1 liter (l.).
10 l.	= 1 dekaliter (dkl.).
10 dkl.	= 1 hectoliter (hl.).
10 hl.	= 1 kiloliter (kl.).

Weight.

10	milligrams (mg.)	= 1 centigram (cg.).
10	cg.	= 1 decigram (dg.).
10	dg.	= 1 gram (g.).
10	g.	= 1 Dekagram (dkg.).
10	dkg.	= 1 hectogram (hg.).
10	hg.	= 1 kilogram (kg.).
10	kg.	= 1 myriagram (mrg.).
10	mrg.	= 1 metric quintal (q.).
10	q.	= 1 metric ton (t.).

United States and English Linear Measure.

12	inches (in.)	= 1 foot (ft.).
3	feet (ft.)	= 1 yard (yd.) = 36 ins.
5½	yds.	= 1 rod (rd.) = 16½ ft.
320	rds.	= 1 mile (mi.) 1760 yds. = 5280 ft.

Surveyors' Measure.

625	square links (sq. li.)	= 1 square rod (sq. rd.).
16	sq. rd.	= 1 square chain (sq. ch.)
10	sq. ch.	= 1 acre (a.).
640	a.	= 1 square mile (sq. mi.).
36	sq. mi. (6 mi. square)	= 1 township (tp.) = 23040 a.

Chain Measure.

7.92	inches	= 1 link (li.).
100	li.	= 1 chain (ch.) = 66 ft.
80	ch.	= 1 mile (mi.).

The engineers' chain is 100 feet long and consists of 100 links.

Square Measure.

144	square inches (sq. in.)	= 1 square foot (sq. ft.).
9	sq. ft.	= 1 square yard (sq. yd.).
30¼	sq. yd.	= 1 square rod (sq. rd.).
160	sq. rd.	= 1 acre (a.).

United States and English Liquid Measure.

4	gills (gi.)	= 1 pint (pt.).
2	pts.	= 1 quart (qt.) = 8 gi.
4	qts.	= 1 gallon (gal.) = 8 pts. = 32 gi.
31½	gals.	= 1 barrel (bbl.) = 126 qts.
2	bbls.	= 1 hogshead (hhd.) = 63 gals. = 252 qts.

Cubic Measure.

1728	cubic inches (cu. in.)	= 1 cubic foot (cu. ft.).
27	cu. ft.	= 1 cubic yard (cu. yd.).

U. S. Dry Measure.

2	pints (pts.)	= 1 quart (qt.).
8	qts.	= 1 peck (pk.) = 16 pts.
4	pks.	= 1 bushel (bu.) = 32 qts. = 64 pts.

Apothecaries' Fluid Measure.

60	minims (m.)	= 1 fluid dram (fl. dr.).
8	fl. drs.	= 1 fluid ounce (fl. oz.) = 480 m.
16	fl. ozs.	= 1 pint (O.) = 128 fl. dr. = 7680 m.
8	O.	= 1 gallon (cong.) = 128 fl. ozs. = 1024 fl. drs.

Avoirdupois Weight.

27$\frac{11}{32}$	grains (gr.)	= 1 dram (dr.).
16	drs.	= 1 ounce (oz.) = 437½ grs.
16	ozs.	= 1 pound (lb.) = 256 drs. = 7000 grs.
100	lbs.	= 1 hundredweight (cwt.) = 1600 ozs.
20	cwt.	= 1 ton (t.) = 2000 lbs. (in long measure).
112	lbs.	= 1 cwt.
20	cwt.	= 1 long ton (t.) = 2240 lbs.

Troy Weight.

24	grains (grs.)	= 1 pennyweight (dwt.).
20	dwt.	= 1 ounce (oz.) = 480 grains.
12	oz.	= 1 pound (lb.) = 240 dwt. = 5760 grs.

Apothecaries' Weight.

20	grains (grs.)	= 1 scruple.
3	scruples	= 1 dram.
8	drams	= 1 ounce.
12	ounces	= 1 pound (lb.)

Lengths.	Abbreviations.	Equivalents.		Approximate Equivalents.
1 barleycorn	bc.	8.4667	millimeters	8.5
		$\frac{1}{3}$	inch.	
1 bolt	b.	36.5760	meters	36.5
		40	yards.	
1 centimeter	cm.	.3937	inch	.4
1 chain	ch.	20.117	meters	20.1
Gunther's		66	feet.	
1 chain	ch.	30.480	meters	30.5
engineers'		100	feet.	
1 fathom (U. S.)	f.	1.8288	meters	$\frac{2}{5}$
		6.	feet.	
1 fathom (British)	f.	1.853	meters	$\frac{11}{6}$
		6.080	feet.	
1 foot (U. S.)	ft.	30.4801	centimeters	30.5
		1.0000029	ft. (British).	1.
1 foot (British)	ft.	30.4800	centimeters	30.5
		.9999971	ft. (U. S.)...	1.
1 furlong	fur.	201.17	meters	200.
		660	feet.	
1 inch	in.	2.5400	centimeters	2.5
		1000.	mils.	
1 kilometer	km.	3280.83	feet	3300.
		.6214	mile (statute or land)	$\frac{2}{3}$
1 knot or nautical mile	k.	1.8533	kilometers	$\frac{11}{6}$
		1.1515	miles	$\frac{8}{7}$
1 league (U. S.)	l.	4.8281	kilometers	$4\frac{7}{5}$
		3.	miles.	
1 link (surveyors')	li.	20.117	centimeters	20.1
1 link (engineers')	li.	30.480	centimeters	$30\frac{1}{2}$
1 meter	m.	39.370000	in. (U. S.)...	40
		39.370113	in. (British).	40
		1.0936	yards	1.1
1 micro-millimeter		.00003937	mil.	
		.000001	millimeter.	
1 micron		.03937	mil.	
		.001	millimeter.	
1 mil		.0254	millimeter.	
		.001	inch.	

Lengths.	Abbreviations.	Equivalents.		Approximate Equivalents.
1 mile (statute or land)	ml.	1609.35	meters	1600
		1.6094	kilometers	$1\frac{2}{3}$
		.8684	knot	$\frac{7}{8}$
1 mile (geographical international)	ml.	7422.	meters	7400
		4.6118	miles	$4\frac{2}{3}$
1 mile (nautical)	ml.	1	knot.	
1 mile (nautical international)	ml.	1852	meters.	
		1.1508	miles	$1\frac{1}{6}$
1 millimeter	mm.	.03937	inch	$\frac{1}{25}$
		39.37	mils.	40
1 perch, pole or rod	p., r.	5.0292	meters	5
1 vara	v.	.8476	meters	$\frac{7}{8}$
		33.372	inches	$33\frac{1}{3}$
1 yard (U. S.)	yd.	91.4402	centimeters	90
		.9144	meter	.9
		1.0000029	yd. (British)	1
1 yard (British)	yd.	91.4399	centimeters	90
		.9144	meters.	
		.9999971	yd. (U. S.)	1

Area of Surface Measure.	Abbreviations.	Equivalents.		Approximate Equivalents.
1 acre	a.	40.4687	ares	40
		4046.87	sq. meters	4000
		.4047	hectare	.4
1 are or ar	a.	100.	sq. meters.	
		1076.387	sq. ft.	1100
		.0247	acre.	
1 circular mil	cm.	.0006452	circular millimeter.	
		.0005067	sq. millimeter.	
1 circular millimeter	cmm.	1550.00	circular mils.	1500
		.7854	sq. millimeter	$\frac{3}{4}$
1 square centimeter	$cm.^2$	.1550	sq. in.	$\frac{2}{31}$
1 square chain (surveyors')	sq. ch.	404.687	sq. meters	400
		4.0469	ares	4
1 square decimeter	$dm.^2$	15.500	square inches.	
		.10764	sq. ft.	.1

Area of Surface Measure.	Abbreviations.	Equivalents.		Approximate Equivalents.
1 square foot (U. S.)	sq. ft.	929.034	sq. centimeters	925
		1.0000057	sq. ft. (British)	1
1 square foot (British)	sq. ft.	929.029	sq. centimeters	925
		.9999942	sq. ft. (U. S.)	1
1 hectare	ha.	2.4710	acres	2.5
		107638.7	sq. ft.	
1 square inch	sq. in.	6.4516	sq. centimeters	6.5
1 square kilometer	km.^{2}	247.104	acres	250
		.3861	sq. mile	$\frac{1}{3}$
1 square meter	m.^{2}	1.19599	sq. yd.	$1\frac{1}{5}$
		10.7639	sq. ft.	$10\frac{3}{4}$
1 square mile	sq. ml.	25900	ares.	
		259	hectares	260
		2.59	sq. kilometers	$2\frac{1}{2}$
1 square mil	mil^2	.0006452	sq. millimeters.	
1 square millimeter	mm.^{2}	.00155	sq. inches.	
		1550.	sq. mils.	
1 square myriameter		38.6101	sq. miles	$38\frac{2}{3}$
1 square yard	sq. yd.	.83613	sq. meters	$\frac{7}{8}$
1 township		93.21	sq. kilometers	90
		.9321	myriameters	1
		36.	sq. miles.	

Volume.	Abbreviations	Equivalents.		Approximate Equivalents.
1 cubic yard	cu. yd.	764.559	liters	760
		201.974	gallons (U. S.).	
		168.184	gallons (British)	170
		21.6962	bu. (U. S.)	22
		21.023	bu. (British)	21
1 dram (U. S.) fluid	fl. dr.	3.6967	milliliters or cubic centimeters	$3\frac{2}{3}$
		.22559	cu. in.	$\frac{1}{4}$
1 dram (British) fluid	fl. dr.	3.5515	milliliters or cubic centimeters	$3\frac{1}{2}$
		.2167	cu. in.	$\frac{1}{5}$

Volume.	Abbreviations.	Equivalents.		Approximate Equivalents.
1 gallon (U. S.)	gal.	3.78543	liters	$3\frac{3}{4}$
		.8327	gallon (British)	$\frac{7}{8}$
		231 cubic inches = 8.323 lbs. water.		
1 gallon (British)	gal.	4.5496	liters	$4\frac{1}{2}$
		1.2009	gal. (U. S.)	$1\frac{1}{5}$
		277.410	cu. in. = 10 lbs. water	270
1 gill (U. S.)	gi.	118.295	cu. centimeters	120
		.1183	liter	1
		7.2188	cu. in.	$7\frac{1}{5}$
1 gill (British)	gi.	142.0614	cu. centimeter.	
		.14206	liter	$\frac{5}{32}$
		8.6691	cu. in.	$8\frac{2}{3}$
1 hectoliter	hl.	26.417	gallons (U. S.)	$26\frac{2}{5}$
		21.997	gal. (British)	22
		2.8377	bu. (U. S.)	$2\frac{7}{8}$
		2.7497	bu. (British)	$2\frac{3}{4}$
1 hogshead (U. S.)	hhd.	2.3848	hectoliters	$2\frac{1}{2}$
1 hogshead (British)	hhd.	2.86396	hectoliters	$2\frac{7}{8}$
1 liter	l.	61.0234	cu. in.	61
		1.05668	quarts (U. S. liquid)	1
		.8799	quarts (British)	$\frac{3}{4}$
		.9081	quart (U. S. dry)	.9
1 milliliter	ml.	1	cu. centimeter.	
1 minim (British)	m.	59.1922	cu. millimeters	59
		.05919	milliliters.	
1 board foot	b. f.	144.	cu. in., viz., 1 sq. ft. surface and 1 in. thick.	
1 bushel (U. S.)	bu.	35239.28	cu. centimeters	35000
		35.2393	liters	35
		.35239	hectoliters	$\frac{1}{3}$
		2150.420	cubic inches.	
		.96897	bu. (British)	1

Volume.	Abbreviations.	Equivalents.		Approximate Equivalents.
1 bushel (British)	bu.	36367.7048	cu. centimeters	36000
		36.3677	liters	$36\frac{1}{3}$
		.36368	hectoliters ..	$\frac{1}{3}$
		2219.28	cubic inches.	2200
		1.032	bu. (U. S.).	
1 cord	c.	4x4x8	ft.	
		3.62458	steres or cubic meters	$3\frac{2}{3}$
1 cubic centimeter	cc. or ..	.0610234	cubic inches.	
	$cm.^3$ ...	61.0234	cubic inches..	60
1 cubic decimeter	$dm.^3$ ...	.0353	cubic foot.	
			1 liter.	
1 cubic foot	$ft.^3$ or ..	28317.	cu. centimeters	28000
	cu. ft...	28.317	liters	$28\frac{1}{3}$
		.28317	hectoliter ...	$\frac{1}{4}$
		29.922	liquid qt. (U. S.)	
		24.916	quarts (British)	25
		25.714	dry quarts ..	$25\frac{3}{4}$
1 cubic inch	cu. in...	16.387	cu. centimeters	$16\frac{1}{3}$
1 cubic meter	cu. m. or $m.^3$	1 stere = 10 hectoliters.		
		35.314	cubic feet....	$35\frac{1}{3}$
		28.3774	bu. (U. S.) ..	$28\frac{1}{3}$
		27.4969	bu. (British)	27.5
		1.30794	cu. yds.	$1\frac{1}{3}$
		264.170	gallons (U. S.)	265
		219.975	gallons (British)	220
1 cubic yard	cu. yd..	.764559	stere or cu. meter	$\frac{3}{4}$
1 minim (U. S.).....	m.	61.612	cu. millimeters	$61\frac{2}{3}$
		.0616	millimeters	$\frac{3}{50}$
1 ounce (U. S.) fluid...	fl. oz...	29.5737	cu. centimeters	$29\frac{1}{2}$
		1.8047	cu. in.	$1\frac{4}{5}$
1 ounce (British) fluid.	fl. oz. ..	28.4123	cu. centimeters	$28\frac{2}{5}$
		1.7338	cu. in.	$1\frac{3}{4}$

Volume.	Abbreviations.	Equivalents.		Approximate Equivalents.
1 peck (British)	pk.	9.09193	liters	9.1
		1.032	pecks (U. S.)	1
		554.82	cu. in.	550
		.3211	cu. ft.	$\frac{1}{3}$
1 peck (U. S.)	pk.	8.80982	liters	$8\frac{4}{5}$
		2.327	gallons (U. S.)	$2\frac{1}{3}$
		.96897	peck (British)	1
		537.605	cu. in.	530
		.3111	cu. ft.	$\frac{1}{3}$
1 perch	p.	$16\frac{1}{2} \times 1\frac{1}{2} \times 1$ ft. (masonry).		
		.7 stere or cu. meter.		
1 pint (U. S.) liquid	pt.	.4732	liter	$\frac{10}{21}$
		4.7318	deciliters	$4\frac{3}{4}$
		28.875	cu. in.	$28\frac{7}{8}$
		.8594	pint (U. S. dry)	$\frac{7}{8}$
1 pint (U. S.) dry	pt.	.5506	liter	$\frac{11}{20}$
		33.600	cu. in.	$33\frac{3}{5}$
		1.1637	pints (U. S. liquid)	$1\frac{1}{6}$
		.96897	pints (British)	1
1 pint (British)	pt.	.5682	liter	$\frac{4}{7}$
		34.6762	cu. in.	$34\frac{2}{3}$
		1.2009	pints (U. S. liquid)	$1\frac{1}{5}$
1 quart (U. S.) liquid	qt.	.94636	liter	1
		57.750	cu. in. = 2.086 lbs. water	$57\frac{3}{4}$
		.8594	quart (U. S. dry)	$\frac{7}{8}$
		.8327	quart (British)	$\frac{7}{8}$
1 quart (U. S.) dry	qt.	1.10123	liters	1.1
1 quart (U. S.) dry	qt.	67.2006	cu. in.	$67\frac{1}{3}$
		1.1637	quarts (U. S. liquid)	$1\frac{1}{8}$
		.96897	quarts (British)	1
1 quart (British)	qt.	1.1365	liters	$1\frac{1}{8}$
		69.3525	cu. in.	$69\frac{1}{3}$
		1.2009	quarts (U. S. liquid)	$1\frac{1}{3}$
1 stere	s.	1.	cubic meter.	

Weight of Masses.	Abbreviations.	Equivalents.		Approximate Equivalents.
1 carat	c.	3.1714	grains	3 1/6
		205.500	milligrams.	
1 centigram	cg.	.15432	grain	2/13
1 decigram	dg.	1.54324	grain	1 1/2
1 dekagram	dkg.	.35276	oz. (av.)	1/3
1 drachm (ap.)	ʒ	3.887934	grams	3 7/8
		2.19429	drams (av.).	2 1/4
1 dram (av.)	dr.	1.77185	grams	1 3/4
		.45573	drams (ap.).	5/11
1 grain	gr.	64.7989	milligram	64 3/4
1 gram	g.	15.4323564	grains	15 5/11
		.035274	oz. (av.).	
		.032151	oz. (Troy).	
1 hundredweight (long)	cwt.	50.8024	kilograms	50 4/5
1 hundredweight (short)	cwt.	45.35924	kilograms	45 1/3
1 kilogram	kg.	2.20462	pounds (av.)	2 1/5
		2.67923	lbs. (Troy)	2 2/3
1 metric ton	t.	2204.62	lbs. (av.)	2200
		1.1023	net tons	1.1
1 milligram	mg.	.015423	grain.	
1 ounce (apothecaries')		31.1035	grams	31.1
		1.09714	oz. (av.)	1.1
		1.	oz. (Troy).	
1 ounce (avoirdupois)	oz.	28.3495	grams	28 1/3
		.911458	oz. (Troy)	.9
1 ounce (Troy)	oz.	31.1035	grams	31.1
		1.09714	oz. (av.)	1.1
		1	oz. (ap.).	
1 pennyweight	dwt.	1.55517	grams	1 1/2
1 pound (av.)	℔.	453.592428	grams	450.
		.45359	kilogram	9/20
		1.21528	lb. (Troy)	1 1/3
		14.5833	oz. (Troy)	100/7
		7000.	grains.	
1 pound (Troy)	lb.	373.242	grams	373 1/4
		.822857	lb. (av.)	5/6
		5760	grains.	

Weight of Masses.	Abbreviations.	Equivalents.		Approximate Equivalents.
1 quarter	qr.	11.3368	kilograms ..	$11\frac{1}{3}$
		25.	lbs. (av.).	
1 scruple		1.295978	grams	$1\frac{1}{3}$
1 ton (net or short)	tn. or t..	907.185	kilograms ...	900
		.907185	metric ton ..	.9
1 ton (long or gross)	tn. or t.	1016.05	kilograms ...	1000
		1.016	metric tons.	
1 tonne or tonneau	t.	1	metric ton.	

1	kilogram	2 lbs.,	$3\frac{1}{4}$ oz.	avoirdupois.
2	"	4 "	$6\frac{1}{2}$ oz.	"
5	"	11 "	$\frac{3}{8}$ oz.	"
10	"	22 "	$\frac{3}{4}$ oz.	"
20	"	44 "	$1\frac{1}{2}$ oz.	"
25	"	55 "	$1\frac{7}{8}$ oz.	"

COMPUTING COMPOUND NUMBERS.

In computing compound or denominate numbers, it is often necessary to reduce the various units into the same denomination.

Rule: To reduce descending, multiply the number of the highest denomination by the number that will reduce it to the next lower denomination, and add to this product any number of units in the lower denomination.

Example: Reduce 5 gallons 3 quarts to quarts.

$$4 \text{ qts.} = 1 \text{ gal.}, \quad 4 \times 5 = 20 + 3 = 23 \text{ qts.}$$

To reduce ascending, divide the denomination to be converted by the number which will reduce it to the next higher denomination, and write the remainder as units of the original denomination.

Example: Reduce 23 quarts to gallons.

$$23 \div 4 = 5 \text{ gals.} + 3 \text{ qts.}$$

Addition of Denominate Numbers.

Rule: Write numbers of the same denomination in the same column, add the units of the lowest denomination, and reduce this sum to units of the next higher denomination. Write the remainder, should there be any, under the column of the lowest denomination, adding then, the units of the next higher denomination thus formed with the column of that denomination.

Example:

4 yds.	2 ft.	6 in.
8 yds.	1 ft.	4 in.
4 yds.	1 ft.	3 in.
17 yds.	2 ft.	1 in.

Subtraction of Denominate Numbers.

Rule: Write the subtrahend under the minuend with units of the same denomination in the same column, begin with the lowest denomination and subtract, writing the remainder under respective columns according to denomination. Should the number of units in any denomination of the subtrahend be greater than the number of the same denomination in the minuend, add to it one unit reduced from the next higher denomination, and when subtracting the next higher denomination, add the unit as borrowed above to the subtrahend of that denomination. Should there be no units in the next higher denomination of the minuend, take one from the first higher denomination containing units, and proceed by continued reduction to find a number which will admit of subtraction.

Example:

	17 yds.	2 ft.	1 in.
	4 yds.	2 ft.	6 in.
	12 yds.	2 ft.	7 in.
Proof: Add,	4 yds.	2 ft.	6 in.
	17 yds.	2 ft.	1 in.

Multiplication of Denominate Numbers.

Rule: Write the multiplier under the lowest denomination and draw a line underneath. Multiply the lowest denomination first, reduce this product to the next higher denomination, placing the remainder, if there be any, below the line under the denomination just multiplied; multiply the next denomination, adding to this product, the number just obtained by reduction of the preceding product, and so on till all the denominations have been multiplied.

Example:

4 yds.	2 ft.	6 in.	
		3	
14 yds.	1 ft.	6 in.	

Division of Denominate Numbers.

Rule for Division: Write the divisor to the left of the dividend, separating them by a curved line, and draw a line underneath. Beginning with the highest, divide each denomination in succession separately, placing the quotient below the line, under its respective denomination. Should there be a remainder from the division of any denomination, reduce and add it to the next lower denomination for division with that denomination.

Should the number of a denomination be less than the divisor, place a cipher in the quotient, reduce and add this number to the next lower denomination and divide. Should the number obtained by reducing one or more denominations be less than the divisor, proceed by continued reduction to find a number which will admit of division.

Any remainder of the lowest denomination is a fraction of that denomination and is so written.

Example:

3) 14 yds.	1 ft.	6 in.	
4 yds.	2 ft.	6 in.	

Factors, Multiples and Divisors.

A factor of a number is one which multiplied by another will make that number, or it is an exact divisor of a number. The factors of 8 are 4 and 2.

A multiple of a number is the product obtained by multiplying that number by any other number.

If a factor is used twice the multiple is the square of that number, as $4 \times 4 = 16$ the square of 4. If a factor is used three times the multiple is the cube of the number, as $3 \times 3 \times 3 = 27$ the cube of 3.

If the factor is found to be the same of two or more numbers, it is called a common factor or common divisor of those numbers, thus 3 is a common factor of 6, 9, 12, 15, etc.

Cancellation.

By cancellation, problems involving both multiplication and division may be simplified and shortened by assembling the products which form the dividend on one side of a line, and those forming a divisor on the other, after which all common factors are eliminated leaving smaller numbers to be computed.

Rule for Cancellation: Draw a horizontal line, write all factors of the dividend above and those of the divisor below the line, cancel all common factors by dividing successively both dividend and divisor by them, after which complete the operation as indicated.

Example:

$$\frac{\overset{2}{\cancel{4}} \times \overset{3}{\cancel{9}}}{\underset{3}{\cancel{6}} \times 5} \text{ leaving } \frac{3 \times 3}{5} = 5\overline{)9} \quad 1\tfrac{4}{5} = 1\tfrac{4}{5}$$

$$\frac{\overset{9}{\cancel{3}} \times \overset{3}{\cancel{18}} \times 5 \times \overset{3}{\cancel{24}} \times \overset{3}{\cancel{12}}}{\underset{2}{\cancel{6}} \times \underset{2}{\cancel{2}} \times \underset{2}{\cancel{8}} \times 4 \times \underset{9}{\cancel{3}} \times 9} = \frac{3 \times 5}{2} = 2\overline{)15} \quad 7\tfrac{1}{2}$$

As dividing a number by itself gives 1 for a quotient, and as multiplying by 1 does not change the quantity of a number, this figure is not written in cancellation, for example, when the same number is found above and below the line, both are cancelled without changing the value of either factor, or when a number on one side will divide evenly a number on the other, the divisor in this case is cancelled entirely, while the other number is cancelled and the quotient written.

The Greatest Common Divisor.

In cancellation with whole numbers and common fractions, it is often necessary to obtain the greatest common divisor of two or more numbers, to reduce a problem to its lowest terms.

The greatest common divisor is the greatest number which will exactly divide two or more other numbers without a remainder.

To find the greatest common divisor of a group of numbers, write the numbers in a column, and draw a vertical line on each side, divide them separately by any small number which will exactly divide each without a remainder, place the divisor thus found to the left of the column, and the quotients to the right of their respective numbers; again divide all the quotients by some small number which will exactly divide each without a remainder, placing this divisor to the left of the first divisor, putting the sign of multiplication between them, and the quotients to the right of their respective numbers; continue this until no small number can be found which will evenly divide all the quotients, then multiply together all the divisors which have been found will divide the numbers and quotients evenly, and this product will be the greatest common divisor.

Example: Find the greatest common divisor of 24, 48, 60 and 36.

$3\times2\times2$	24	12, 6, 2
	48	24, 12, 4
	60	30, 15, 5
	36	18, 9, 3

$3\times2\times2=12$ greatest common divisor.

It will be noted that if each of the last quotients are multiplied by 12, the greatest common divisor, the products thus found will be the respective numbers from which they were derived. This is a proof of the operation:

As $2\times12=24$, $4\times12=48$, etc.

Multiples: A multiple of a number is the product of that number multiplied by any other whole number.

A common multiple of two or more numbers is a product found by using those numbers as factors alone, or with other factors.

The least common multiple of two or more numbers is the smallest number which can be evenly divided by each of those numbers.

In solving various problems involving whole numbers and fractions, it is often necessary to find the least common multiple of two or more numbers.

Rule for Finding the Least Common Multiple: Write the numbers in a column and draw a vertical line on each side, divide by any small number that will evenly divide two or more of them, place this divisor to the left and the quotients to the right of their respective numbers, the numbers which are not divisible at this operation are carried in full to the right of the line, continue till no number can be found which will divide two or more of the numbers, the product then of the divisors, the final quotients and the undivided numbers is the least common multiple.

Example:

	36	18, 9, 9, 3
$3\times2\times2\times2$	40	20, 10, 5, 5
	48	24, 12, 6, 2

Divisors — Quotients and undivided numbers.

$3\times2\times2\times2\times3\times5\times2=720$ least common multiple.

FRACTIONS.

A fraction is one or more of the equal parts of a unit or whole number. "Fraction" is derived from the Latin word

"fractus" meaning broken or divided, broken up into separate parts.

A fractional unit is one of the parts into which the unit is equally divided. A fraction is expressed by two numbers, one written above a line and the other below; this arrangement indicates that the number below the line is the number of parts into which the whole unit was divided, and is called the denominator, and the number above the line is the number of equal parts taken away from the others to make the fraction, and is called the numerator, as $\frac{3}{4}$; here the unit has been divided into 4 denominate parts, 3 of which are taken or enumerated to make this fraction, therefore 3 of these parts make $\frac{3}{4}$ of the whole.

When the numerator is less than the denominator it is called a proper fraction, as $\frac{4}{5}$, $\frac{3}{8}$, $\frac{1}{2}$, are proper fractions.

When the numerator is greater than the denominator it is called an improper fraction, as $\frac{5}{4}$, $\frac{8}{3}$, $\frac{2}{1}$, are improper fractions.

A compound fraction is a fraction of a fraction, as $\frac{3}{4}$ of $\frac{5}{8}$, $\frac{2}{5}$ of $\frac{3}{4}$, are compound fractions.

A complex fraction is one containing a fraction in its numerator or denominator, as $\frac{3}{\frac{5}{8}}$, $\frac{\frac{3}{4}}{\frac{1}{2}}$, $\frac{2\frac{1}{4}}{6}$, are compl x fractions.

A number consisting of a whole number and a fraction is called a mixed number, as $3\frac{1}{2}$, $2\frac{1}{4}$, $12\frac{7}{8}$, are mixed numbers.

To multiply the numerator by a number multiplies the value of the fraction by that number; to multiply the denominator by a number is equivalent to dividing the value of the fraction by that number.

To divide the numerator by a number divides the value of the fraction; to divide the denominator multiplies the value of the fraction by that number.

Example:

$$\frac{4}{12} \times 2 = \frac{8}{12}; \quad \frac{4}{12 \times 2} = \frac{4}{24} \text{ or } \frac{2}{12}; \quad \frac{4}{12} \div 2 = \frac{2}{12}; \quad \frac{4}{12 \div 2} = \frac{4}{6}.$$

To multiply both the numerator and denominator by the same number does not change the value of the fraction; multiplying raises it to higher terms, and dividing reduces it to lower terms.

To reduce a fraction to its lowest terms, divide both the numerator and denominator by their greatest common divisor.

To add and subtract fractions, it is necessary that they have the same or a common denominator.

To reduce two or more fractions to a common denominator, find the least common multiple of the denominators, this will be the least common denominator, and multiply each numerator, by the quotient of the common denominator divided by its respective denominator for a new numerator.

Example: Reduce $\frac{3}{4}$, $\frac{5}{8}$, $\frac{2}{6}$, to a common denominator.

2×2	$\frac{3}{4}$	2, 1, $24\div4=6$, $6\times3=\frac{18}{24}=\frac{3}{4}$
	$\frac{5}{8}$	4, 2, $24\div8=3$, $3\times5=\frac{15}{24}=\frac{5}{8}$
	$\frac{2}{6}$	3, 3, $24\div6=4$, $4\times2=\frac{8}{24}=\frac{2}{6}$

$2\times2\times3\times2\times1=24$ common denominator.

If a fraction is an improper fraction, it may be reduced to a whole or mixed number by dividing the numerator by the denominator, if there is a remainder write it over the denominator as a fraction.

Example: Reduce $\frac{33}{8}$ to a whole or mixed number.

$$33\div8=4\tfrac{1}{8}.$$

A whole or mixed number is reduced to an improper fraction by multiplying the whole number by the denominator and adding to this product the numerator, if there be any, which is written over the denominator as the numerator of the required fraction.

Example:

$$4\tfrac{1}{8}=\frac{33}{8}$$

$$\begin{array}{r} 8 \\ \hline 32 \\ 1 \\ \hline 33 \end{array}$$

$$\frac{33}{8}$$

Addition of Fractions.

As only units or things of the same nature, kind or denomination can be added, so it is that only fractions having the same or a common denominator can be added.

Two dogs and 3 cats cannot be added together as dogs or cats, but when a denomination or name common to both is used they may then be added, as 2 dogs and 3 cats make 5 animals. It is therefore necessary before adding fractions to reduce them to a common denominator, after which add the numerators, the sum of which, used as a numerator of the common denominator, is the sum of the fractions added, expressed as a fraction.

Rule for Addition: Reduce the fractions to be added to the least common denominator, add the numerators and place the sum as a numerator over the common denominator. If this produces a proper fraction, reduce it to its lowest terms, if an improper fraction, reduced it to a whole or mixed number, which, as shown above, is done by dividing the numerator by the denominator; where mixed numbers are to be added, add the whole numbers separately, after which add the sums of the fractions and whole numbers.

Example: Add $3\frac{1}{2}$, $4\frac{3}{8}$ and $2\frac{1}{4}$.

$$3\tfrac{1}{2} = \tfrac{4}{8}$$
$$4\tfrac{3}{8} = \tfrac{3}{8}$$
$$2\tfrac{1}{4} = \tfrac{2}{8}$$
$$9 \quad \tfrac{9}{8} = 1\tfrac{1}{8}$$
$$1\tfrac{1}{8}$$
$$10\tfrac{1}{8}$$

Subtraction of Fractions.

To subtract fractions it is necessary that they should be reduced to a common denominator.

Rule: Write the subtrahend under the minuend, reduce the fractions to a common denominator, subtract the numerator of

the subtrahend from the numerator of the minuend, write the result as a numerator over the common denominator, which is the remainder expressed as a fraction.

If the operation be composed of mixed numbers, and the fraction of the minuend is less than that of the subtrahend, borrow one unit from the whole number of the minuend, reduce it to a fraction having the common denominator, add it to the fraction in the minuend and proceed to subtract; reduce the remainder to its lowest terms and write it under the column of fractions, the unit borrowed from the whole number of the minuend is returned to the whole number of the subtrahend before the whole numbers are subtracted. $\frac{1}{2}-\frac{3}{8}=\frac{1}{8}$.

Example:

$$4\tfrac{3}{8}-2\tfrac{1}{2}=1\tfrac{7}{8}$$

$$\begin{array}{ll} 4\frac{3}{8}=\frac{35}{8} \text{ or } =3\frac{11}{8} \\ 2\frac{1}{2}=\frac{20}{8} \text{ or } =2\frac{4}{8} \\ \hline 1\frac{7}{8} \qquad\qquad 1\frac{7}{8} \end{array}$$

Multiplication of Fractions.

Multiplication of fractions is indicated by writing the word "of" or the sign $\times$ of multiplication between them, as $\frac{1}{2}$ of $\frac{3}{4}$ or $\frac{1}{2}\times\frac{3}{4}$.

Rule: To multiply a fraction by a fraction, multiply the numerators together for a numerator and the denominators together for a denominator, the fraction thus obtained is the product.

Example: $\frac{1}{2}\times\frac{3}{4}=\frac{3}{8}$ or by analysis $\frac{1}{2}$ of $\frac{3}{4}=\frac{3}{8}$.

To multiply a fraction by a whole number, multiply the numerator by the whole number and divide the product by the denominator, the quotient thus formed is the product. In practice, it is customary to multiply whole numbers by fractions, that is, to multiply the whole number by the numerator and divide the product by the denominator.

Example: $\frac{3}{4}\times 8=24\div 4=6$.

To simply divide the denominator of the fraction by the whole number is equivalent to multiplying the value of the fraction.

Example: $\frac{5}{48} \times 8 = \frac{5}{6}$.

Where a number of fractions are to be multiplied together the operation may be simplified by cancellation.

Example:

$$\frac{1}{2} \times \frac{3}{4} \times \frac{\overset{2}{\cancel{10}}}{\underset{4}{\cancel{16}}} \times \frac{\overset{3}{\cancel{9}}}{\underset{5}{\cancel{15}}} \times \frac{\cancel{4}}{\cancel{9}} = \frac{1}{16}.$$

When a whole number appears it may be given the unit 1 as a denominator and treated as a fraction.

In multiplying mixed numbers, they may be reduced to improper fractions and multiplied as fractions, or the whole number and fraction may be multiplied separately by the other whole number and fraction, adding the partial products to make the final product.

Example:

$24\frac{5}{8} \times 34\frac{3}{4} =$

24	$\frac{5}{8} \times 34 = 21\frac{1}{4}$	$24 \times \frac{3}{4} = 18$
34	5	3
96	8)170	4)72
72	$21\frac{2}{8} = \frac{1}{4}$	18
816		

$21\frac{1}{4} = 21\frac{8}{32}$

18

$\frac{15}{32}$

$855\frac{23}{32}$

$\frac{5}{8} \times \frac{3}{4} = \frac{15}{32}$

Division of Fractions.

Rule: To divide a fraction by a fraction, invert the terms of the divisor and proceed as in multiplication of fractions.

Example: How much tea at $\$\frac{1}{2}$ per pound can be bought for $\$\frac{3}{4}$? As much as $\frac{1}{2}$ is contained in $\frac{3}{4}$, $=1\frac{1}{2}$ pounds.

$$\tfrac{3}{4}\div\tfrac{1}{2}=\tfrac{3}{4}\times\tfrac{2}{1}=\tfrac{6}{4}=1\tfrac{1}{2}.$$

To divide a fraction by a whole number or vice versa, use the unit 1 as a denominator for the whole number and proceed as above.

Example:

$$4\div\tfrac{3}{4}=5\tfrac{1}{3} \qquad \tfrac{3}{4}\div 4=\tfrac{3}{16}$$
$$\tfrac{4}{1}\times\tfrac{4}{3}=\tfrac{16}{3}=5\tfrac{1}{3} \qquad \tfrac{3}{4}\times\tfrac{1}{4}=\tfrac{3}{16}$$

Or by analysis, to divide a fraction by a whole number, to either divide the numerator or multiply the denominator by the whole number, will give the same result.

Example:

$$\tfrac{12}{15}\div 4=\tfrac{3}{15} \qquad 12\div 4=3 \therefore \tfrac{3}{15}$$
$$15\times 4=60 \therefore \tfrac{12}{60}=\tfrac{3}{15}$$

To divide small mixed numbers, reduce them to improper fractions and proceed as with other fractions.

To divide large mixed numbers, reduce their fractions to a common denominator and divide the numerators thus obtained as if they were whole numbers.

Decimal Fractions.

Decimal fractions are fractions, the denominators of which are 10, 100, 1000, etc., and the denominator is never written, but is indicated by placing a period to the left of the numerator, thus $\frac{2}{10}$ is written .2, $\frac{2}{100}$ is written .02, $\frac{2}{1000}$ is written .002. There must be as many places in the numerator as there are ciphers in the denominator. When the number given for the numerator does not contain the required number of places, ciphers are added to the left of the numerator to make them, after which the period is placed to the left of these.

A mixed decimal fraction is a whole number and a fraction expressed decimally, as $2\frac{2}{10}$ is written 2.2, $2\frac{2}{100}$ is written 2.02, $2\frac{2}{1000}$ is written 2.002.

Computations in common fractions may often be much simplified by reducing the common fraction to decimal fractions, when the operation may then be carried out as in simple numbers.

To reduce a common fraction to a decimal fraction, place a decimal point (period) to the right of the numerator and to the right of this as many ciphers as may be necessary to produce even division, or a sufficient extension of the numeration into decimals, and divide this by the denominator.

Examples:

$\frac{4}{5} = .8 = \frac{8}{10}$ $\quad 5)\underline{4.0}$
$\quad .8$

$\frac{4}{50} = .08 = \frac{8}{100}$ $\quad 50)\underline{4.00}(.08$
$\quad 4.00$

$\frac{5}{8} = .425 = \frac{425}{1000}$ $\quad 8)\underline{5.000}$
$\quad .425$

$\frac{3}{9} = .3333333+ = \frac{3333333+}{10000000}$ $\quad 9)\underline{3.0000000}$ +interminate
$\quad .3333333$ decimal.

To reduce a decimal to an equal decimal fraction or a common fraction, draw a line underneath, write "1" in the denominator for the period and as many ciphers as there are places in the numerator, drop all ciphers on the left end of the numerator, and reduce the fraction to its lowest terms.

Example:

$.8 = \frac{8}{10} = \frac{4}{5}$. $\qquad .08 = \frac{08}{100} = \frac{8}{100} = \frac{4}{50}$.

To reduce a mixed number to a decimal, reduce the common fraction to a decimal fraction and place it at the right of the whole number.

Example:

$3\frac{1}{2} = 3.5$ $\qquad \frac{1}{2} = 2)1.0$
$\quad .5$

Addition and Subtraction of Decimals.

Decimal fractions are added and subtracted in the same manner as simple numbers, the number being written so that the decimal points stand in the same column.

Example:

Addition	437.523	Subtraction	700.763
	263.24		263.24
	700.763		437.523

Multiplication of Decimals.

Rule: Multiply as in whole numbers and point off as many places in the product as there are decimal places in both the multiplicand and the multiplier.

Example:

42.34
2.4
16936
8468
101.616

Division of Decimals.

Rule: Divide as in whole numbers and point off as many places in the quotient as the decimal places in the dividend exceed those in the divisor. Annex as many ciphers to the right of the dividend as may be required to produce even division, or a sufficient extension of the quotient into decimals, each cipher thus added is an additional decimal place in the dividend, and should be so reckoned when pointing off the quotient.

Example:

12)25.308
2.109

As the divisor is a whole number and has no decimals there are 3 exceeding places in the dividend which are pointed off in the quotient.

$$.09\overline{).04131}\quad .459$$

there are 5 places in the dividend and 2 in the divisor, hence 3 places in the quotient.

Percentage.

Percentage is the process of reckoning by the hundred, and the result is obtained by taking so many hundredths of a number.

The sign of per cent is %, and is preceded by the required per cent expressed as a whole number.

Per cent is taken from the Latin phrase "per centum," meaning "by the hundred," therefore (5%) or 5 per cent of a number, is $\frac{5}{100}$ of that number, or the number multiplied by .05.

Example: What is 5% of 480 = 24.

$$\begin{array}{r} 480 \\ .05 \\ \hline 24.00 \end{array}$$

In this case 480 is called the "base" or the number of which the percentage is taken. 5 is the per cent or "rate," and is the ratio it bears to the base, by the hundred, showing that 5 is taken as many times as there are hundreds in 480. 24 is the "percentage" or 5% of 480. Or by analysis:

$$\begin{array}{r} 100)480.0(4.8\times 5=24.0 \\ 400 \\ \hline 800 \\ 800 \\ \hline \end{array}$$

Rules: To find the percentage, multiply the base by the rate as in the above example.

To find the rate, divide the percentage by the base.

Example: What percentage of 480 is 24 = 5%.

480)24.00(.05 or 5%
24.00

To find the base, divide the percentage by the rate.

Example: 24 is 5% of what number?

.05)24.00(480
20
40
40

How much is 480 less 5% = 456.

480	480
.05	24
24.00	456

PROPORTION.

Proportion is sometimes called the "rule of three" because there are three numbers given from which to find a fourth.

Causes and effects are said to be proportional; that is, if the cause is increased or diminished, the effect is naturally increased or diminished in the same proportion.

For example, take money spent as a cause, goods bought is the effect.

In proportion, the relation between the causes is always the same as the relation between the effects.

The ratio is the relation between two numbers of the same kind or denomination; and is found by dividing the first number by the second; thus, $\frac{\$24}{\$6}$, written also, $\$24 \div \$6$, or $\$24 : \$6$; it equals 4, and is read, the ratio of $24 to $6.

A proportion is an equality of ratios; thus, $\frac{\$24}{\$6} = \frac{12 \text{ books}}{3 \text{ books}}$; written also, $\$24 \div \$6 = 12 \text{ books} \div 3 \text{ books}$; or, $\$24 : \$6 :: 12$ books : 3 books; or, $24 : 6 :: 12 : 3$.

The last form is the one usually used; it is, however, simply an abbreviation of the first form, and is read 24 is to 6 as 12 is to 3.

Proportion is an application of common fractions, the common fraction expressing a ratio, and an equality of common fractions expressing a proportion.

NOTE.—The numerators and denominators are called proportionals.

The antecedents are the first and third terms of a proportion.

NOTE.—The antecedents are the numerators of the fractions representing the ratios.

The consequents are the second and fourth terms of a proportion.

NOTE.—The consequents are the denominators of the fractions representing the ratios.

The means are the second and third terms of the proportion.

The extremes are the first and fourth terms of the proportion.

A proportion being an application of common fractions, the principles applied to both are the same.

Illustrate the principles of proportion by using the following forms: $18:24::12:16$; or $\frac{18}{24}=\frac{12}{16}$.

1. To multiply or divide an antecedent produces a like effect on the value of a ratio.

2. To multiply or divide a consequent produces an opposite effect on the value of a ratio.

3. To multiply or divide both antecedent and consequent by the same number produces no effect on the value of a ratio.

4. The product of the extremes is equal to the product of the means.

Note principle 4, thus: The extremes are 18 and 16, the means are 24 and 12; $18\times16=24\times12$; the product of the extremes is equal to the product of the means.

NOTE.—Every problem in proportion contains a question and a condition, each of which contains two quantities, one in the question being unknown.

SIMPLE PROPORTION.

Simple proportion is a proportion in which each term consists of one number.

1. If 10 kegs of nails cost \$50, what is the cost of 12 kegs? First cause is to second cause as first effect is to second effect.

$$x : \$50 :: 12 : 10.$$

	5
1st cause x	$\not{5}\not{0}$ 2d cause
2d effect $\not{1}\not{0}$	12 1st effect.
	\$60 Answe .

Explanation.—1. Take the unknown term as the first term and call it x.

2. x represents a cause, as it is to buy 12 kegs of nails as an effect; the other cause is \$50 and the effect 10 kegs bought.

3. Arrange the terms in their order: 1st cause : 2d cause :: 1st effect : 2d effect.

4. As the product of the extremes is equal to the product of the means, $10 \times x = 12 \times 50$; x therefore equals $12 \times 50 \div 10$, or 60. *Answer,* \$60.

NOTE.—As the first term then equals the second term times the third term divided by the fourth term, the third term may be written under the second, and the fourth at the left, with a vertical line between them, thus indicating the multiplication and the division, which may be abbreviated by cancellation.

5. How many kegs of nails can be bought for \$36, if 17 kegs cost \$68?

First effect is to second effect as first cause is to second cause.

$$x : 17 :: \$36 : \$68.$$

1st effect, x	$\not{1}\not{7}$ 2d effect.
2d cause, $\not{6}\not{8}$	$\not{3}\not{6}$ 1st cause.
$\not{4}$	9 Answer.

RULES FOR PROPORTION.

I. 1. Write x as the first term to represent the unknown quantity in the question, the corresponding quantity in the

condition being the second term; write the known quantity in the question as the third term, the corresponding quantity in the condition being the fourth term.

2. Multiply the second term by the third term and divide the product by the fourth term. The quotient is the first term or answer.

The fourth term may be cancelled with the second or third term.

Or II. 1. Write the causes on opposite sides of the vertical line, and also the effects, writing the first cause and the second effect on one side, and the second cause and the first effect on the other side.

2. The product of the two known quantities on one side, divided by the known quantity on the other side, gives the unknown quantity.

NOTE 1.—Represent the unknown quantity by x, and make it the first term; it may, however, be the first, second, third, or fourth term.

NOTE 2.—If either term is a fraction, the numerator is treated as the term, the denominator being written on the other side of the line.

NOTE 3.—Cancellation is applied, whenever possible, between the numbers on the opposite side of the line.

COMPOUND PROPORTION.

A compound proportion is a proportion in which each of two or more of the terms is the product of two or more numbers.

The term compounded may be a cause or an effect; thus, it may be men, working so many days, of so many hours each, in which the cause is hours' work, found by multiplying the number of men by the number of days, by the number of hours; or, it may be the work done, as a ditch or a wall, with the length, depth, and breadth, or height given, in which the effect is the product of the three dimensions.

Rule for Compound Proportion.

1. Consider each term as a single number, even when it is an indicated product of several numbers.

2. Proceed as in simple proportion.

Written Problems.—1. If 12 men build a wall 60 feet long, 4 feet thick, and 20 feet high, in 24 days, working 12 hours a day, how many men will it take to build a wall 100 feet long, 3 feet thick, 12 feet high, in 18 days, of 8 hours each?

1st cause		2d cause		1st effect		2d effect
x		12		100		60
18	:	24	: :	3	:	4
8		12		12		20
$144x$	:	3456	: :	3600	:	4800

$18 \times 8 = 144$, $12 \times 24 \times 12 = 3456$, $100 \times 3 \times 12 = 3600$,
$60 \times 4 \times 20 = 4800$; $3456 \times 3600 = 12441600$,
$144 \times 4800 = 691200$;

Then, $12441600 \div 691200 = x = 18$ men. *Answer.*

Or, by cancellation.

$$\begin{array}{rr|rr|l}
 & x & \cancel{100} & \cancel{5} & \\
\text{1st cause} & \cancel{6}\ \cancel{18} & \cancel{3} & & \text{1st effect.} \\
 & \cancel{2}\ \ \cancel{8} & \cancel{12} & \cancel{3} & \\
 & \cancel{5}\ \cancel{60} & \cancel{12} & & \\
\text{2d effect} & \cancel{4} & \cancel{24} & 3 & \text{2d cause.} \\
 & \cancel{20} & \cancel{12} & 6 & \\
\hline
 & x = 18 & & &
\end{array}$$

Explanation.—1. Let x represent the unknown quantity. We have the proportion, the 1st cause, x men in 18 days of 8 hours each, is to the 2d cause, 12 men in 24 days of 12 hours each, as the effect of the 1st cause, a wall 100 feet by 3 feet by 12 feet, is to the effect of the 2d cause, a wall 60 feet by 4 feet by 20 feet. This is reduced to the simple proportion, $144x : 3456 :: 3600 : 4800$. Making the product of the means equal to the product of the extremes, the value of x is found to be 18. *Answer,* 18 men.

SQUARE AND CUBE ROOT.

The square of a number is the product of that number multiplied by itself and is called the second power of that number.

The square of 4 is $4 \times 4 = 16$, here 16 is the square or second power of 4.

The cube of a number is the number multiplied by itself, and the product thus obtained multiplied by that number again, and is called the third power of that number. The cube of 4 is $4 \times 4 \times 4 = 64$, here 64 is the cube or third power of 4.

The power of a number is a number formed by multiplying it by a given factor, called the exponent, and multiplying the successive products any number of times by this factor or exponent.

The power of a number is indicated by writing the exponent or factor in a small figure at the top and to the right of a number, 4^2 indicates that 4 is to be raised to the second power or squared, as $4^2 = 4 \times 4 = 16$. 4^3 indicates that 4 is to be raised to the third power, $4^3 = 4 \times 4 \times 4 = 64$. 2^5 indicates that 2 is to be raised to the fifth power, as $2^5 = 2 \times 2 \times 2 \times 2 \times 2 = 32$, here 32 is 2 raised to the fifth power or is the fifth power of 2.

The process of finding any power of a number is called involution.

Rule for Involution: To find the power of a number, multiply the number by itself, using the number as a factor as many times as there are units in the exponent.

Evolution is the opposite of involution, and is the process of finding the equal factors of a number which is called the root of that number.

The cube root is one of the three equal factors of a number, as 4 is the cube root of 64.

The radical sign is written thus: $\sqrt{}$ and indicates that some root of a number before which it is placed is to be found,

as $\sqrt{16}$ indicates that the square root of 16 is to be found. $\sqrt{16}=4$, as 4 is the square root of 16.

$\sqrt[3]{64}$ indicates the cube root of 64 which is 4, hence, $\sqrt[3]{64}=4$.

The index of the root is the small figure written above the radical sign to show what root is to be found. When no index is written over the radical sign this indicates that the square root is to be found. The index for the square root is never written.

Examples: $\sqrt{25}=5$. $\sqrt[3]{27}=3$. $\sqrt[4]{16}=2$, here 2 is the 4th root of 16. $\sqrt[5]{32}=2$, here 2 is the 5th root of 32.

Rule for Finding the Square Root: Beginning at the right, separate the number into periods of two places each, if the number contains a decimal fraction, begin at the decimal point and point off in each direction.

Take the square root of the greatest square in the first period at the left, place it in the answer as the first figure of the root, and also place it to the left of the number with a straight line between. Subtract the square of this number from the first period and bring down the second period to the right of the remainder.

Use the remainder thus found, except the right-hand figure, as a trial dividend, and add the root to itself as a trial divisor; write the quotient in the root and also at the right of the trial divisor, multiply the completed divisor by the root just found and subtract the product from the dividend, write the next period to the right of the remainder, add the root just found to the previous divisor and proceed as above.

If a product is found to be greater than the dividend the next lower number should be tried for the root.

If the trial divisor exceeds the trial dividend, place a cipher in the root and also at the right of the trial divisor, bring down the next period and proceed as above.

If a number cannot be squared, decimals may be added and the root extended indefinitely.

Examples:

$\sqrt{1296}=36.$

3	12.96. (36
3	9
66	396
	396

$\sqrt{2}=1.414213$

1	2. (1.414213+
1	1
24	100
4	96
281	400
1	281
2824	11900
4	11296
28282	60400
2	56564
282841	383600
1	282841
2828423	10075900
	8485269
	1590631

To find the square root of fractions: Reduce the fraction to a decimal and proceed as in whole numbers and decimals; if the terms of a fraction are square, take the square root of each and set one above the other, as $\sqrt{\frac{16}{25}}=\frac{4}{5}$.

Rule for Finding the Cube Root:

1. Separate the number into periods of three places in both directions from the decimal point. Write the cube root of the greatest cube in the first period as the first figure in the root, subtract the cube of this from the first period, and bring the second period down to the right of the remainder.

2. Use this remainder as the dividend, and the square of the root already found multiplied by 300 as a trial divisor, place the quotient at the right in the root.

3. Complete the trial divisor by adding to it the product of the part of the root already found, the part just found, and 30 multiplied together, adding also the square of the root just found.

4. Multiply the completed divisor by the part of the root just found, subtract and proceed as before.

If a product is found to be greater than the dividend the next lower number should be tried for the root.

If a trial divisor is greater than the dividend write a cipher in the root, and also in the trial divisor, bring down the next period and proceed as before.

Examples: $\sqrt[3]{46656} = 36$ (Reference: 1st paragraph.)

2700	46656.	)36
540	27	
36		
3276	19656	
	19656	

(Reference: 2d paragraph.)

$3^2 = 9 \times 300 = 2700$ trial divisor.

$19656 \div 2700 = 6+$

(Reference: 3d paragraph.)

$3 \times 6 \times 30 + 6^2 = 576 + 2700 = 3276$ complete divisor.

$\sqrt[3]{2} = 1.259-$.

Operation:		2.	(1.259–
		1	
First complete divisor	364)	1000	
		728	
Second complete divisor	45025)	272000	
		225125	
Third complete divisor	4721331)	46875000	
		42491979	
		4383021	

$1^2 \times 300 = 300$ first trial divisor;
$1 \times 2 \times 30 + 2^2 + 300 = 364$ first complete divisor.
$12^2 \times 300 = 43200$ second trial divisor;
$12 \times 5 \times 30 + 5^2 + 43200 = 45025$ second complete divisor.
$125^2 \times 300 = 4687500$ third trial divisor;
$125 \times 9 \times 30 + 9^2 + 4687500 = 4721331$ third complete divisor.

FORMULÆ.

A formula is a method of expressing the relations between mathematical quantities by means of letters or symbols which represent these quantities, and it may be defined as a rule where symbols or letters are used to represent numbers or quantities.

A knowledge of algebra and geometry is not necessarily required to enable one to use formulæ; a formula can be expressed in words, and it then becomes a rule.

Formulæ are more convenient than rules, for they enable one at a glance to see all the operations which are to be performed; they require much less space and are more preferable than long-written rules.

The signs used in formulæ are the ordinary signs which indicate operations and the signs of aggregation.

The following signs are used ordinarily in expressing formulæ:

$+$ Addition	as $2+3=5$.
$-$ Subtraction	as $5-2=3$.
$\times$ Multiplication	as $2\times3=6$.
$\div$ Division	as $6\div2=3$.

Division is also expressed by placing a straight horizontal line between the two quantities, as $\frac{6}{2}=3$.

The radical sign indicates that some root of the quantity at the right of the sign is to be taken. The root to be taken is indicated by writing the root required above the sign, as $\sqrt[3]{27}$ indicates that the cube root of 27 is to be found, the

figure 3 in this case is called the index of the root, when the square root is required the index is omitted, thus $\sqrt{16}$ shows that the square root of 16 is required.

The signs of aggregation are as follows: ——— vinculum, ( ) parenthesis, [ ] brackets, and { } braces, and indicate that two or more numbers or quantities are to be treated as one quantity, as $\overline{2+3}\times 4$, or $(2+3)\times 4$, or $[2+3]\times 4$, or $\{2+3\}\times 4$ all indicate that the sum of 2 and 3 is to be multiplied by 4.

The vinculum is rarely used except in connection with the radical sign. Thus, instead of writing $\sqrt{(2+3)}$, it may be written $\sqrt{2+3}$ which shows that the square root of the sum of 2 and 3 is to be found.

In cases where only one sign of aggregation is needed, parenthesis ( ) is usually used, if two signs of aggregation are needed, or one within another, brackets [( )] and parenthesis are usually used, to avoid having parenthesis enclosed by parenthesis; brackets are usually placed outside.

If three signs of aggregation are required the braces enclose the brackets and the brackets enclose the parenthesis.

Should it be necessary to use all four signs of aggregation, the brace is usually put outside, the brackets next, the parenthesis next and the vinculum inside.

When several quantities are connected by the signs showing addition, subtraction, multiplication and division, the operations of multiplication and division are always performed before those of addition and subtraction: Thus $3+4\times 2=11$. If it was required here to multiply the sum of 3 and 4 by 2, the 3 and 4 would have to be enclosed in parenthesis: Thus $(3+4)\times 2=14$. The same rule applies to the sign of division: Thus $16+8\div 4=18$, while $(16+8)\div 4=6$.

Addition and subtraction are of equal value where several quantities are connected by plus and minus signs, and the operations may be performed in the order in which they stand, or in any order that is most convenient.

The following example will show the use and application of the various signs:

$$\sqrt[3]{\{[(\overline{15-5}\div 2+3)\times 2-4]\div 3+5\}\times 3}.$$

This equation is solved in the following manner: Start with the inside numbers or those coming within the signs of aggregation which enclose them only, reducing each such aggregation to a value which can be indicated by one number, and apply the signs of operation in successive order as follows:

Beginning with the inside numbers which are $15-5=10$, we then have

$$\sqrt[3]{\{[(10\div 2+3)\times 2-4]\div 3+5\}\times 3}.$$

This operation removes the vinculum. The next inside numbers are $10\div 2+3=8$. We then have

$$\sqrt[3]{\{[8\times 2-4]\div 3+5\}\times 3}.$$

This operation removes the parenthesis. The next inside numbers are $8\times 2-4=12$. We then have

$$\sqrt[3]{\{12\div 3+5\}\times 3}.$$

This operation removes the brackets. The next inside numbers are $12\div 3+5=9$. We then have

$$\sqrt[3]{9\times 3}.$$

This operation removes the braces. The last numbers are $9\times 3=27$. We then have $\sqrt[3]{27}=3$, the cube root of 27.

In formulæ where quantities are represented by letters, the sign of multiplication is omitted, it being understood that when two letters are adjacent, without a sign between them, the quantities represented by them are to be multiplied together, as $\frac{ab}{c}$ indicates that a is to be multiplied by b and the product divided by c.

The Greek letter π (pi) is a constant used to express the ratio of the circumference of a circle to its diameter, and is

equal to 3.1416 which multiplied by the diameter of a circle will give its circumference.

A few formulæ are here given to show their usefulness and how they are written.

In the elements of a circle 6″ in diameter, let

d = diameter. c = circumference.
r = radius. a = area.

π (pi) = 3.1416.

Then $\pi d = c$, or $3.1416 \times 6 =$ circumference.

$\frac{\pi d^2}{4} = a$, or $[3.1416 \times 6 \times 6] \div 4 =$ area, or $\pi r^2 = a$, or

$3.1416 \times 3 \times 3 =$ area.

Mensuration.

Mensuration treats of the measurement of lines, angles, surfaces, etc. A line is that which has length but neither breadth

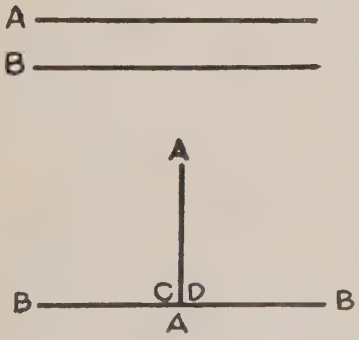

FIG. 1.

or thickness. Lines running in the same direction and everywhere equally distant, are called parallel lines, as A and B.

When one straight line intersects another straight line making two equal angles, the one line is perpendicular to the other,

and the angles thus formed are right angles, as *A*, *B*, *C* and *D*. The line *A* is perpendicular to *B*; *C* and *D* are right angles.

An angle is the difference in direction of two straight lines that intersect.

An angle less than a right angle is an acute angle, and one greater than a right angle is an obtuse angle.

Right angle. Acute angle. Obtuse angle.

FIG. 2.

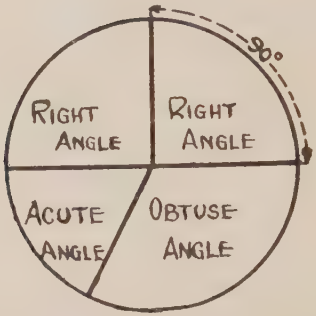

FIG. 3.—Angles Shown in the Circle.

Angles may be indicated by degrees, a right angle is always one of 90 degrees or $\frac{1}{4}$ of a circle, an acute angle is less, and an obtuse angle is greater than 90 degrees.

A triangle is a plane surface bounded by three straight lines.

A right angle triangle is one having one right angle. A right angle triangle is indicated by the following elements:

Base, the side on which the triangle stands.

Altitude or perpendicular, the side at right angles to the base.

Hypotenuse, the side opposite the right angle.

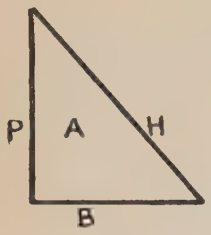

a = area.
b = base.
p = altitude or perpendicular.
h = hypotenuse.

FIG. 4.—Right Angle Triangle.

Area is base $\times \frac{1}{2}$ of the altitude or $b \times \frac{p}{2} = a$, or $\frac{4}{2} \times 3 = 6$.

Hypotenuse is square root of sum of squares of two sides, or

$$\sqrt{b^2+p^2}=h. \quad 3^2+4^2=25.$$

Square root of $25=5$.

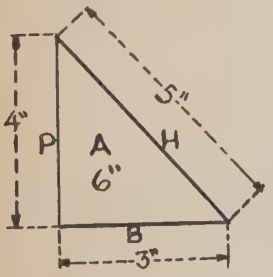

FIG. 5.—Elements of a Right Angle Triangle.

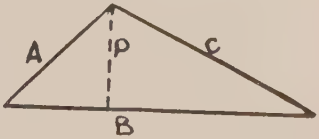

FIG. 6.—Irregular Triangle.

Length of a side is square root of difference of squares of hypotenuse and other side, or

$$\sqrt{h^2-b^2}=p \text{ or } 25-9=16.$$

Square root of $16=4$.

The area of a triangle, whether a right angle triangle or not, may be found by the following rules: Half the product of either side by the perpendicular to it from the opposite vertex equals the area.

Formula: $\frac{b \times p}{2} = \text{area}$. (Fig. 6, page 51.)

Or from half the sum of the three sides subtract each side separately, multiply together the half sum and the three remainders, the square root of the product is the area. This rule is indicated by the following formula: Let

$A = \text{area} = 11.61+$
$a = \text{one side} = 4''$
$b = \text{“ “} = 6''$
$c = \text{“ “} = 8''$

$$\sqrt{\frac{(a+b+c-a)}{2}\ \frac{(a+b+c-b)}{2}\ \frac{(a+b+c-c)}{2}\ \frac{(a+b+c)}{2}} =$$

Reduce this equation to figures and solve it. Find the area of a triangle with sides 3″, 4″ and 5″ by the same method.

A quadrilateral is any four-sided figure.

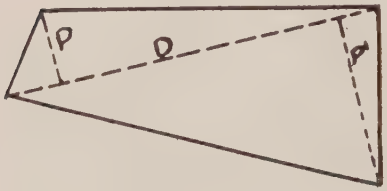

a = area.
d = diagonal.
p, p′ = perpendiculars from opposite angles.

FIG. 7.—A Quadrilateral.

The area of any quadrilateral is half the product of either diagonal by the sum of the perpendiculars to it from the opposite angles, or $\frac{(p+p') \times d}{2} = a$.

A parallelogram is a quadrilateral with its opposite sides equal. The area of a parallelogram is the product of one side by the perpendicular distance between it and the other side. $L \times P =$ area.

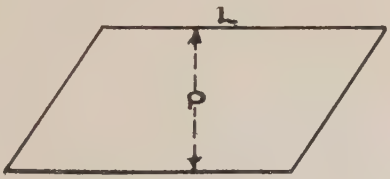

FIG. 8.—A Parallelogram.

A rectangle is a parallelogram, the angles of which are right angles.

A square is a rectangle with all sides equal.

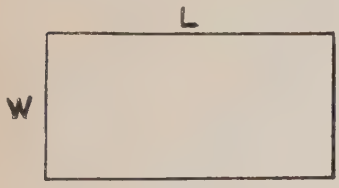

FIG. 9.—A Rectangle.

$L \times W =$ area.

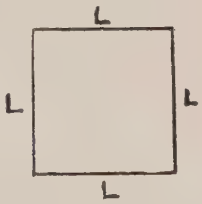

FIG. 10.—A Square.

$L^2 =$ area.

The Circle.

A circle is a plane figure bounded by a curved line, all points of which are equally distant from a point within, called the center.

The diameter of a circle is a straight line drawn through the center, touching both sides.

The radius of a circle is half the diameter.

The circumference is the distance around the outside of a circle.

An arc of a circle is any portion of the circumference.

A chord is a straight line having its extremities in the circumference.

A segment of a circle is a portion of the circle bounded by an arc and its chord.

A sector is a portion of the circle bounded by two radii and the arc which they intercept; a sector equal to one-fourth of the circle is called a quadrant, and contains 90 degrees.

The circumference is assumed to be divided into 360 equal parts, called *degrees;* each degree is divided into 60 parts, called *minutes,* each minute divided into 60 parts, called *seconds,* and each second into 60 parts, called *thirds,* etc.

In computing the simpler elements of the circle, the following symbols are usually used:

The Greek letter π (pi) is used to express the ratio of the circumference of any circle to its diameter, and is equal to 3.1416.

π (pi) = 3.1416 constant.
a = area.
c = circumference.
d = diameter.
r = radius.

Formulæ:

$$a = \frac{\pi d^2}{4} \text{ or } \pi r^2.$$

$$c = \pi d \text{ or } 2\pi r.$$

$$d = 2r \text{ or } \frac{c}{\pi}.$$

$$r = \frac{d}{2} \text{ or } \frac{c}{2\pi}.$$

To find the circumference of a circle, multiply the diameter by 3.1416, or multiply the diameter by 22 and divide that product by 7; the latter is approximate.

To find the area of a circle, multiply the diameter by itself, and this product by .7854; or the two following rules will give

the approximate area: Multiply the diameter by the circumference and divide this product by 4; the quotient is the area; or multiply half the circumference by half the diameter; the product is the area.

To find the diameter of a circle for a given inscribed square, divide the length of one side of square by .7071.

To find the length of side of an inscribed square in a given circle, multiply the diameter of the circle by .7071; this is a

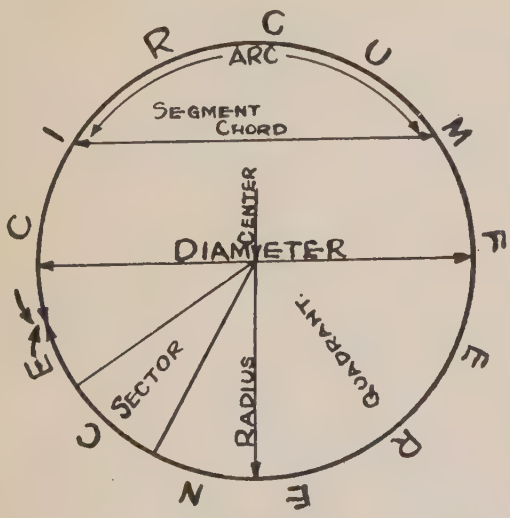

FIG. 11.—Elements of the Circle.

very handy rule to determine the greatest square to which a piece of round material may be reduced by cutting away for the four sides.

To find the length of side for a square whose area is equal to that of a given circle, multiply the diameter by .8862.

To lay off a hexagon, or divide a circle into 6 equal parts, set a pair of dividers or compasses to one-half the diameter, which will step off the circumference into six equal spaces, draw a

straight line between all of these points along the circumference, and the inscribed figure will be a hexagon.

The inside diameter of a cylinder or other interior circle may be measured, where inconvenient to do so otherwise, by setting a pair of dividers to step off exactly six spaces in the circle; this distance on the dividers will be the radius, which multiplied by 2 gives the diameter; or a circle drawn with the dividers will be the same size of the one stepped off six times: this is sometimes called the "cooper's rule," because coopers use it for setting the dividers to lay off the head of a barrel.

To lay off an octagon, draw a straight line through the center of the circle, draw another at right angles to this through the center; half the distance between where these lines touch the circumference, on the circumference, chord measure, will step off the circle into 8 spaces.

CUBE.

A regular solid with six equal square sides. To compute the volume, multiply length of side, *AB*, by itself and that product by length of side again.

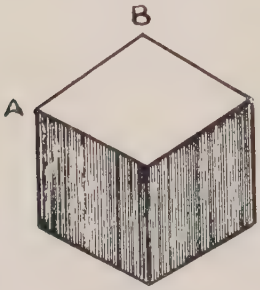

FIG. 12.—Cube.

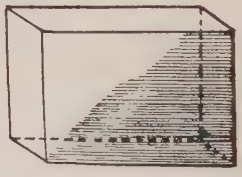

FIG. 13.—Parallelopipedon.

PARALLELOPIPEDON.

A volume contained by six quadrilateral sides, every opposite two of which are equal and parallel. To compute volume, multiply length by breadth, and that product by depth.

PRISM.

A solid whose bases or ends are similar, equal, and parallel plane figures; and whose sides are parallelograms. To compute volume, multiply area of base by height. A prism may

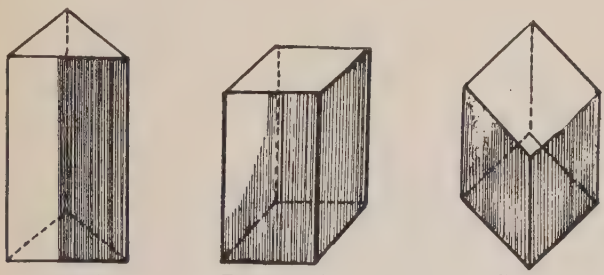

Triangular Prism. Rectangular Prism Square Prism.

FIG. 14.—Prisms.

be triangular, rectangular or square; a brick is a rectangular prism; a piece of square scantling, with both ends squared, is a square prism.

PRISMOID.

A solid resembling a prism in form, but whose sides are not parallel; the base is parallel with the top end, though they are of different areas. To compute volume, add together the areas of the two ends, to this sum add four times the area of middle section parallel to them, and multiply this sum by one-sixth of perpendicular height.

Example: What is the volume of a rectangular prismoid with base, *EG*, and, *GH*, $7'' \times 6''$; top end, *AB*, and, *BD*, $3'' \times 2''$, and height 15 feet?

$7 \times 6 = 42$, area of base; $3 \times 2 = 6$, area of top.

$42 + 6 = 48$, sum of areas of two ends.

Length and breadth of middle section are respectively equal to half the sum of lengths and breadths of base and top.

$\frac{7+3}{2}=5$, length of middle section; $\frac{6+2}{2}=4$, breadth of middle section. $4\times5=20$, area of middle section. $20\times4=80$. four times area of middle section. $80+48=128$, sum of areas of two ends plus area of middle section.

$15'\times12''=180''$, height in inches. $180\div6=30$.

Then, $180\times30=3840$ cu. in. volume of prismoid.

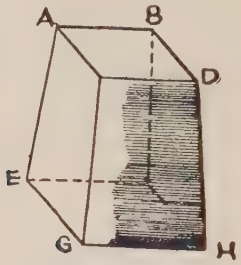

FIG. 15.—Prismoid.

If this prismoid is a piece of lumber and it is desired to find the number of board feet it contains, divide its volume in cubic inches by 144; there are 144 cubic inches in a board foot. $3840\div144=26.6$; therefore, in a piece of lumber $7''\times6''$ at one end, $3''\times2''$ at the other end, and 15′ long there are 26.6 board feet.

CYLINDER.

To compute volume, multiply area of base by height.

CONE.

To compute volume, multiply area of base by perpendicular height and take one-third of this product.

Example: A cone with diameter of base *AB*, 6″ and height, *EC*, 12″ what is volume?

Area of $6''=28.2744$; then $\frac{28.2744\times12''}{3}=113.0976$ cu. in. volume of cone.

FRUSTUM OF CONE.

To compute volume, add together the square of the diameters of the greater and lesser ends and the product of the two diameters; multiply this sum by .7854, and this product by the height, then divide this last product by three.

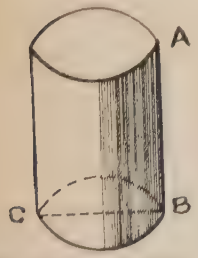

Fig. 16.—Cylinder.

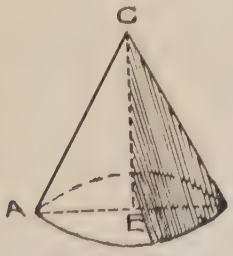

Fig. 17.—Cone.

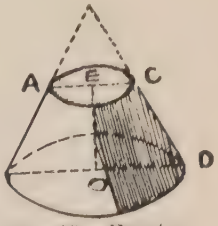

Fig. 18.—Frustum of Cone.

Example: What is volume of frustum of cone having diameter 5″ at greater end, *BD*, diameter 3″ at lesser end, *AC*, and height, *EO*, 9″?

$5^2 + 3^2 = 34$, sum of squares of diameters of ends.

$5 \times 3 = 15$, product of diameters.

$15 + 34 = 49$; $49 \times .7854 = 38.4846$.

38.4846 × 9″ (height) = 346.3614 ÷ 3 = 115.4538 cu. in. volume.

SPHERE.

To find volume, multiply cube of diameter by .5236.

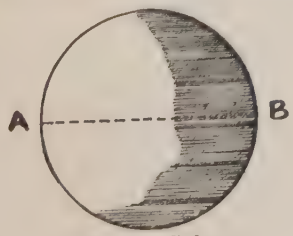

Fig. 19.—Sphere.

Example: Find volume of sphere having diameter *AB*, 5″. $5^3 = 125$; $125 \times .5236 = 65.45$ cu. in. volume. To compute hollow sphere, subtract volume of internal space from sphere.

HOW TO FIND THE QUANTITY OF WATER, TONS OR GALLONS, A TANK WILL HOLD.

The tank is 10′ long, 6′ wide, and 6′ deep; multiply the length by the breadth, $10 \times 6 = 60$; multiply this by the depth, $60 \times 6 = 360$, the number of cubic feet in the tank. A cubic foot of fresh water weighs 62.5 lbs., and of sea water, 64 lbs.; in this example we will use fresh water. Multiply cubic feet in tank by weight of 1 cu. ft. of water, $360 \times 62.5 = 22500$ lbs. of fresh water in the tank; divide this by 2240, the number of pounds in a ton (long), and the result will be the number of tons in the tank, when it is filled with fresh water.

There are about $7\frac{1}{2}$ gals. of water in 1 cu. ft.; therefore, to find the number of gallons the above tank will hold, multiply the number of cubic feet (360) by $7\frac{1}{2}$, which will give 2700 gals., the amount the tank will hold.

CAPACITY OF ROUND TANK.

How much sea water, tons and gallons, will a cylindrical tank hold which is 4′ in diameter and 12′ high?

First find area of circle 4′; the formula is $\frac{\pi d^2}{4}$ = area.

$4^2 = 16$; $16 \times 3.1416 = 50.2656$; $50.2656 \div 4 = 12.5664$, area of section of tank in square feet. $12.5664 \times 12 = 150.79+$, capacity of tank in cubic feet.

Sea water weighs 64 lbs. per cu. ft. $150.79 \times 64 = 9650.56$ lbs. $\div 2240 = 4.30$, capacity of tank in tons.

Or as sea water is taken at 35 cu. ft. per ton, then $150.79 \div 35 = 4.30$, capacity of tank in tons of sea water.

There are about 7.5 gals. in 1 cu. ft. $150.79 \times 7.5 = 1130.92$, capacity of tank in gallons.

TO FIND AMOUNT OF COAL TAKEN BY CHANGE OF DRAFT.

A ship before coaling has a draft of 24′ 06″ ford., and 25′ 08″ aft. After coaling, the draft is 26′ 08″ ford. and 27′ 04″ aft. The mean tons per inch immersion of these drafts are 62 tons. How much coal has been taken on board?

Rule.—Subtract mean draft before coaling from mean draft after coaling; the product of this remainder in inches, multiplied by the tons per inch immersion, will give the number of tons of coal taken.

24′ 06″
25′ 08″
50′ 02″ ÷ 2 = 25′ 01″, mean draft before coaling.
26′ 08″
27′ 04″
54′ 00″ ÷ 2 = 27′ 00″, mean draft after coaling.

27′ 00″ − 25′ 01″ = 1′ 11″ = 23″; then 23 × 62 = 1426 tons of coal taken.

The mean tons per inch immersion is taken at the mean of the mean draft before coaling, and the mean draft after coaling.

In this case it is found as follows:

25′ 01″, mean draft before coaling.
27′ 00″, mean draft after coaling.
52′ 01″ ÷ 2 = 26′ 0½″,

the draft at which the tons per inch immersion should be taken in the above problem.

TO ASCERTAIN DISTANCE FROM MASTHEAD TO POINT ON DECK.

It is required to ascertain the distance from the masthead to a point on the deck 30′ from where the mast passes through the deck; the mast is 40′ high.

The hypotenuse of a right angle triangle with 30′ base and 40′ altitude will give this distance.

$$30^2=900;\ 40^2=1600;\ 900+1600=2500;$$

$\sqrt{2500}=50$, distance in feet required to be ascertained.

TO LAY OFF A PATTERN OF THE FRUSTUM OF A CONE.

Such as the top part of a funnel, to be made of sheet metal, as shown in Fig. 20.

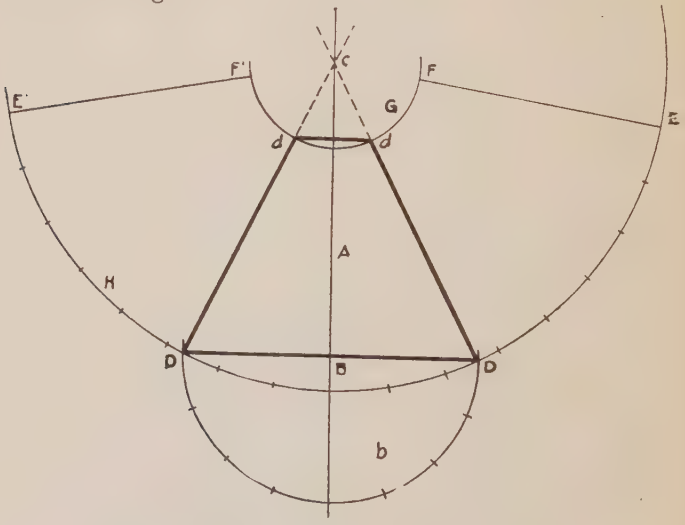

FIG. 20.—Expansion of Pattern for a Cone.

First draw a side elevation of the frustum of the cone with base or large end down.

Draw a center line *A* intersecting the base line at *B*.

Inscribe the half-circle *b* the same diameter as the base of the cone, using the point *B* as center.

Extend the lines forming the sides of the cone till they cross the line *A* at *C*.

Divide the half-circle *b* into any number of equal spaces.

Draw such portion of the circle *H* as may be required, with the radius *C-D*, using *C* as center.

Beginning at *B*, point off, in each direction, on the circle *H*, as many spaces, and of equal length, as there are spaces in the half-circle *b*.

Draw such portion of the circle *G* as may be required, using *C-d* as radius and *C* as center.

Draw lines from *E* and *E'* toward the point *C* till they intersect the circle *G* at *F* and *F'*.

The pattern thus cut along the lines, *E-F-G-F'-E'* and *H*, will form the frustum of the cone as required.

Sufficient material must be allowed for laps and seams.

TO LAY OFF THE PATTERN OF AN ELBOW.

(To be made of sheet metal, as shown in Fig. 21.)

First draw a side elevation of the elbow, in the lower end of which inscribe a half-circle the same diameter as the pipe of the elbow; divide the half-circle into any number of equal spaces, and draw a vertical line through each of these points extending from the base *B* to the angle of the elbow *A*; number these lines consecutively, beginning with 0 at the longest or first line on the left.

Below this draw the horizontal parallel lines *a-a* and *b-b* the same distance apart as the length of the line numbered 0 above. Beginning about the middle of the line *b-b*, point off in each direction, as many spaces, and of equal length, as there are

spaces in the half-circle above, and draw vertical lines at these points to intersect the line *a-a;* number the center line 0 and number the others consecutively in each direction.

Measure the length of each line on the elbow from base *B* to angle *A*, and transfer these measurements to the lines having

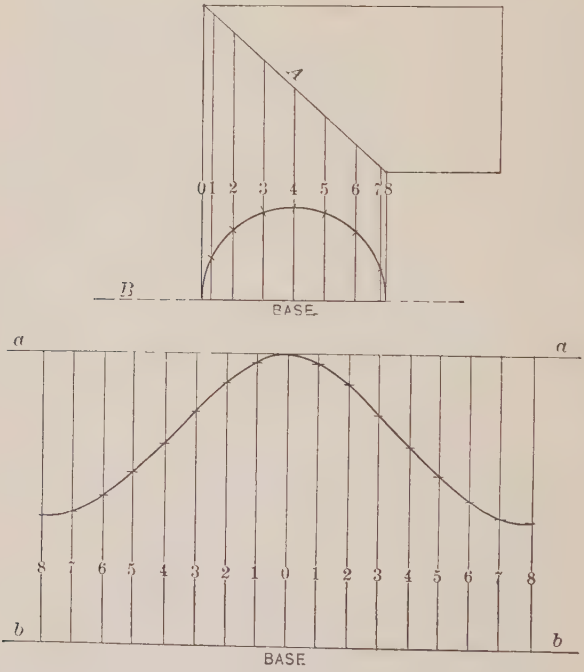

FIG. 21.—Expansion of Pattern for an Elbow.

the same numbers below, measuring up from the base line *b-b;* a curve passing through the points thus found, will give the shape to cut sheets for each end of the elbow.

Sufficient material must be allowed for laps and seams.

Table 1.—Strength of Materials.

Ultimate Tensile Strength in Pounds per Square Inch.

Metals and alloys.	Pounds.
Aluminum, cast	15,000
Aluminum, bars, sheets	24,000– 28,000
Aluminum, wire, hard	30,000– 65,000
Aluminum, wire, annealed	20,000– 35,000
Brass, cast	18,000– 24,000
Brass, wire, hard	80,000
Brass, wire, annealed	50,000
Bronze	22,000– 28,000
Bronze, gun metal	25,000– 55,000
Bronze, manganese, cast	60,000
Bronze, manganese, rolled	100,000
Bronze, phosphor, cast	50,000
Bronze, phosphor, wire	100,000
Bronze, silicon, cast	55,000– 75,000
Bronze, silicon, wire	108,000
Bronze, Tobin, cast	66,000
Bronze, Tobin, rolled	80,000
Bronze, Tobin, cold rolled	100,000
Copper, cast	25,000
Copper, plates, rods, bolts	32,000– 35,000
Copper, wire, hard	55,000– 65,000
Copper, wire, annealed	36,000
Gold, cast	20,000
Gold, wire	30,000
Iron, cast	15,000– 18,000
Iron, cast, gray	18,000– 24,000
Iron, cast, malleable	27,000– 35,000
Iron, wrought, shapes	48,000
Iron, wrought, bars	50,000
Iron, wrought, wire, unannealed	80,000
Iron, wrought, wire, annealed	60,000
Lead, cast	1,800
Lead, pipe, wire	2,200– 2,500
Lead, rolled sheets	3,300
Silver, cast	40,000
Steel, castings for ships	60,000
Steel, forgings, soft low carbon	58,000
Steel, forgings, carbon, not annealed	75,000
Steel, forgings, carbon, annealed	70,000– 80,000
Steel, forgings, carbon, oil tempered	80,000– 90,000
Steel, nickel, shapes and plates	80,000
Steel, nickel, rivets	70,000– 85,000
Steel, structural, shapes and plates	55,000– 65,000
Steel, rivet	48,000– 58,000
Steel, cast, wire, Bessemer	86,000
Steel, cast, wire, high carbon	172,000
Steel, cast, wire, crucible	224,000
Steel, mild, machine, low carbon or soft, forgings, shapes, etc., is usually taken at 60,000 lbs. per sq. in., using 6 as a factor of safety for constant loads, and 8 as a factor of safety for live loads where there are sudden jerks, as in hoisting and lowering boats, etc.	
Tin, cast	3,500– 4,600
Zinc, cast	4,000– 6,000
Zinc, rolled sheets	7,000– 16,000
Woods.	
Ash, American	16,500
Hickory, American	11,000
Mahogany	8,000
Oak, American, white	10,000
Pine, American, white, and pitch	10,000
Pine, American, long leaf yellow	19,200

CALCULATIONS FOR BREAKING STRAIN AND SAFE LOAD.

In calculating the ultimate tensile strength (breaking strain) and safe load of rods, bolts, bars or other shapes: Let A = area in square inches at smallest cross-section subjected to the load; S = ultimate tensile strength of material in pounds per square inch, and f = factor of safety.

Then AS = breaking strain, and $\frac{AS}{f}$ = safe load.

Example: What is the breaking strain, and safe constant load, of a $\frac{3}{4}''$ eye bolt, of mild steel, suspended from the deck overhead by threaded end and nut?

From Table 45, page 436, find the diameter at root of thread, this being the smallest section, of a $\frac{3}{4}''$ bolt, which is .620″; of this, first find the area; and for this operation there are two formulæ, $\frac{\pi d^2}{4}$ and πr^2; in this case we will use the latter:

Radius of .620 = .310; $.310^2 = .0961$; $3.1416 \times .0961 = .3019$, area in square inches at smallest section. $.3019 \times 60000 = 18114$, breaking strain in pounds of eye bolt.

The factor of safety for constant load of mild steel is 6; then, $18114 \div 6 = 3019$, safe constant load in pounds of eye bolt.

Table 2.—Unit Weights of Materials.

Weight of Materials in Pounds.

Material.	Unit.	Pounds.
Aluminum	Per cubic foot...	162.00
Naval brass or composition	...do...	525.00
Bronze and gun metal	...do...	550.00
Brickwork, common	...do...	113.00
Copper	...do...	550.00
Cellulose, corn pith	...do...	8.00
Coal—43 cubic feet = 1 ton.		
Ceiling and insulation, 2½-pound metal, cork painted	Per square foot..	*†4.10
Ceiling and insulation, 2½-pound metal, cork slabs, 1½ inches.	...do...	*†5.90
Ceiling and insulation, 2½ pound metal, with fire felt, 1½ inches.	...do...	*†5.70
Ceiling and insulation, 2½-pound metal	...do...	*†3.80
Cement, Portland, and sand	Per cubic foot...	130.00
Cork, compressed (Nonpareil), 1 inch thick, per square foot, 1½ to 1¼ pounds.	Per square foot..	1.20
Gum-rubber gasket material	Per cubic foot...	100.00
Glass	...do...	165.00
Iron, wrought	...do...	480.00
Iron, cast	...do...	450.00
Lead	...do...	710.00
Leather	...do...	58.00
Linoleum, ⅛ inch thick, including cement	Per square foot..	1.60
Linoleum, heavy, ¼ inch thick, including cement	...do...	1.30
Linoleum, medium, 4.85 mm. thick, including cement	...do...	1.00
Linoleum, light, 3.35 mm. thick, including cement	...do...	.66
Marble cement for cork, ¼ inch thick	...do...	2.75
Oil, fuel—40 cubic feet = 299.2 gallons = 1 ton.		
Steel, wrought and cast	Per cubic foot...	490.00
Steel, nickel, face hardened	...do...	491.00
Tiling, ceramic, ¼ inch, exclusive of cement	Per square foot..	3.00
Tiling, ceramic, ⅞ inch, exclusive of cement	...do...	6.50
Tiling, marble mosaic, exclusive of cement	...do...	6.75
Tiling, rubber, exclusive of cement	...do...	4.25
Water, fresh	Per cubic foot...	62.50
Water, fresh	Per gallon...	8.35
Water, fresh—1 cubic foot = 7.48 gallons.		
Water, sea	Per cubic foot...	64.00
Wood, ash	...do...	50.00
Wood, butternut	...do...	35.00
Wood, cedar, white	...do...	25.00
Wood, cypress (25 to 40)	...do...	35.00
Wood, mahogany, San Domingo	...do...	54.00
Wood, mahogany, Honduras	...do...	35.00
Wood, oak, live	...do...	67.00
Wood, oak, white	...do...	50.00
Wood, pine, white (25 to 35)	...do...	30.00
Wood, pine, yellow (40 to 45)	...do...	45.00
Wood, spruce	...do...	30.00
Wood, teak	...do...	46.00
Zinc, cast	...do...	435.00

* For galvanized metal add one-third pound per square foot.
† Includes bolts, fastenings, stiffening, etc.

Table 3.—Squares, Cubes, Square Roots, Cube Roots, Circumferences and Circular Areas of Numbers from 1 to 100.

No.	Square.	Cube.	Sq. root.	Cu. root.	No. = Dia.	
					Circum.	Area.
1	1	1	1.0000	1.0000	3.142	0.7854
2	4	8	1.4142	1.2599	6.283	3.1416
3	9	27	1.7321	1.4422	9.425	7.0686
4	16	64	2.0000	1.5874	12.566	12.5664
5	25	125	2.2361	1.7100	15.708	19.6350
6	36	216	2.4495	1.8171	18.850	28.2743
7	49	343	2.6458	1.9129	21.991	38.4845
8	64	513	8.8284	2.0000	25.133	50.2655
9	81	729	3.0000	2.0801	28.274	63.6173
10	100	1000	3.1623	2.1544	31.416	78.5398
11	121	1331	3.3166	2.2240	34.558	95.0332
12	144	1728	3.4641	2.2894	37.699	113.097
13	169	2197	3.6056	2.3513	40.841	132.732
14	196	2744	3.7417	2.4101	43.982	153.938
15	225	3375	3.8730	2.4662	47.124	176.715
16	256	4096	4.0000	2.5198	50.265	201.062
17	289	4913	4.1231	2.5713	53.407	226.980
18	324	5832	4.2426	2.6207	56.549	254.469
19	361	6859	4.3589	2.6684	59.690	283.529
20	400	8000	4.4721	2.7144	62.832	314.159
21	441	9261	4.5826	2.7589	65.973	346.361
22	484	10648	4.6904	2.8020	69.115	380.133
23	529	12167	4.7958	2.8439	72.257	415.476
24	576	13824	4.8990	2.8845	75.398	452.389
25	625	15625	5.0000	2.9240	78.540	490.874
26	676	17576	5.0990	2.9625	81.681	530.929
27	729	19683	5.1962	3.0000	84.823	572.555
28	784	21952	5.2915	3.0366	87.965	615.752
29	841	24389	5.3852	3.0723	91.106	660.520
30	900	27000	5.4772	3.1072	94.248	706.858
31	961	29791	5.5678	3.1414	97.389	754.768
32	1024	32768	5.6569	3.1748	100.531	804.248
33	1089	35937	5.7446	3.2075	103.573	855.299
34	1156	39304	5.8310	3.2396	106.814	907.920
35	1225	42875	5.9161	3.2711	109.956	962.113
36	1296	46656	6.0000	3.3019	113.097	1017.88
37	1369	50653	6.0828	3.3322	116.239	1075.21
38	1444	54872	6.1644	3.3620	119.381	1134.11
39	1521	59319	6.2450	3.3912	122.522	1194.59
40	1600	64000	6.3246	3.4200	125.66	1256.64
41	1681	68921	6.4031	3.4482	128.81	1320.25
42	1764	74088	6.4807	3.4760	131.95	1385.44
43	1849	79507	6.5574	3.5034	135.09	1452.20
44	1936	85184	6.6332	3.5303	138.23	1520.53
45	2025	91125	6.7082	3.5569	141.37	1590.43
46	2116	97336	6.7823	3.5830	144.51	1661.90
47	2209	103823	6.8557	3.6088	147.65	1734.94
48	2304	110592	6.9282	3.6342	150.80	1809.56
49	2401	117649	7.0000	3.6593	153.94	1885.74
50	2500	125000	7.0711	3.6840	157.08	1963.50

Table 3.—Squares, Cubes, Square Roots, Cube Roots, Circumferences and Circular Areas of Numbers from 1 to 100.—Continued.

No.	Square.	Cube.	Sq. root.	Cu. root.	No. = Dia.	
					Circum.	Area.
51	2601	132651	7.1414	3.7084	160.22	2042.82
52	2704	140608	7.2111	3.7325	163.36	2123.72
53	2809	148877	7.2801	3.7563	166.50	2206.18
54	2916	157464	7.3485	3.7798	169.65	2290.22
55	3025	166375	7.4162	3.8030	172.79	2375.83
56	3136	175616	7.4833	3.8259	175.93	2463.01
57	3249	185193	7.5498	3.8485	179.07	2551.76
58	3364	195112	7.6158	3.8709	182.21	2642.08
59	3481	205379	7.6811	3.8930	185.35	2733.97
60	3600	216000	7.7460	3.9149	188.50	2827.43
61	3721	226981	7.8102	3.9365	191.64	2922.47
62	3844	238328	7.8740	3.9579	194.78	3019.07
63	3969	250047	7.9373	3.9791	197.92	3117.25
64	4096	262144	8.0000	4.0000	201.06	3216.99
65	4225	274625	8.0623	4.0207	204.20	3318.31
66	4356	287496	8.1240	4.0412	207.35	3421.19
67	4489	300763	8.1854	4.0615	210.49	3525.65
68	4624	314432	8.2462	4.0817	213.63	3631.68
69	4761	328509	8.3066	4.1016	216.77	3739.28
70	4900	343000	8.3666	4.1213	219.91	3848.45
71	5041	357911	8.4261	4.1408	223.05	3959.19
72	5184	373248	8.4853	4.1602	226.19	4071.50
73	5329	389017	8.5440	4.1793	229.34	4185.39
74	5476	405224	8.6023	4.1983	232.48	4300.84
75	5625	421875	8.6603	4.2172	235.62	4417.86
76	5776	438976	8.7178	4.2358	238.76	4536.46
77	5929	456533	8.7750	4.2543	241.90	4656.63
78	6084	474552	8.8318	4.2727	245.04	4778.36
79	6241	493039	8.8882	4.2908	248.19	4901.67
80	6400	512000	8.9443	4.3089	251.33	5026.55
81	6561	531441	9.0000	4.3267	254.47	5153.00
82	6724	551368	9.0554	4.3445	257.61	5281.02
83	6889	571787	9.1104	4.3621	260.75	5410.61
84	7056	592704	9.1652	4.3795	263.89	5541.77
85	7225	614125	9.2195	4.3968	267.04	5674.50
86	7396	636056	9.2736	4.4140	270.18	5808.80
87	7569	658503	9.3274	4.4310	273.32	5944.68
88	7744	681472	9.3808	4.4480	276.46	6082.12
89	7921	704969	9.4340	4.4647	279.60	6221.14
90	8100	729000	9.4868	4.4814	282.74	6361.73
91	8281	753571	9.5394	4.4979	285.88	6503.88
92	8464	778688	9.5917	4.5144	289.03	6647.61
93	8649	804357	9.6437	4.5307	292.17	6792.91
94	8836	830584	9.6954	4.5468	295.31	6939.78
95	9025	857375	9.7468	4.5629	298.45	7088.22
96	9216	884736	9.7980	4.5789	301.59	7238.23
97	9409	912673	9.8489	4.5947	304.73	7389.81
98	9604	941192	9.8995	4.6104	307.88	7542.96
99	9801	970299	9.9499	4.6261	311.02	7697.69
100	10000	1000000	10.0000	4.6416	314.16	7853.98

ELEMENTS OF WATER.

Fresh water, at its maximum density, which is at a temperature of 39.1° F., weighs 998.8 ozs. or 62.425 lbs. to the cubic foot. But to facilitate computation, a cubic foot of fresh water is usually taken at 1000 ozs. or 62.5 lbs.

At 32° it weighs 62.418 lbs., at 62°, 62.355, and at 212° (boiling point), 59.64. At temperatures below 39.1° its density decreases, slowly at first, but progressing rapidly to 32° (freezing point); as will be seen by the weight of a cubic foot of ice, which is only 57.5 lbs.

It will be observed that the weight of a given volume of water decreases when the temperature is either increased or decreased from 39.1° (max. density); which shows that it expands both by heating and freezing.

A cubic foot of sea water weighs 64.3 lbs.

The weight of fresh water as compared to sea water is nearly as 39 is to 40.

In computing the displacement, etc., of ships, a cubic foot of sea water is taken at 64 lbs., and 35 cu. ft. to a long ton.

TO CALCULATE PRESSURE DUE TO HEAD OF WATER.

The pressure per square inch at the bottom of a column of water, or at any depth, may be found as follows:

Multiply the height of column, or depth, in feet, if fresh water by 62.5, if sea water by 64.3, and divide the product by 144; the quotient will be the pressure in pounds per square inch.

Example: What is the pressure per square inch, at the lowest point, on the bottom of a ship, drawing 30 ft., in sea water?

$30 \times 64.3 = 1929$; $1929 \div 144 = 13.38$ pressure per square inch, at bottom.

To find the height of column to give a required pressure: Multiply the pressure required by 144 and divide this product by weight per cubic foot of the water to be used; quotient will be the height of standpipe in feet.

Example: It is required to obtain, with a standpipe, a pressure of 15 pounds per square inch on a compartment for testing. What height would the standpipe be to give the required pressure, fresh water being used?

$15 \times 144 = 2160$; $2160 \div 62.5 = 34.56$ ft., height of standpipe.

The following is another and shorter method of finding the pressure in pounds per square inch of a column of fresh water:

Multiply the height of the column in feet by .434.

From Hand-Book of National Tube Company, 1913.

Pressure of Water Due to Its Weight.—The pressure of still water in pounds per square inch against the sides of any pipe channel, or vessel of any shape whatever is due solely to the "head" or height of the level surface of the water above the point at which the pressure is considered, and is equal to 0.43302 lbs. per square inch for every foot of head, or 62.355 lbs. per square foot for every foot of head (at 62° F.).

The pressure per square inch is equal in all directions, downwards, upwards, or sideways, and is independent of the shape or size of the containing vessel.

The pressure against a vertical surface, as a retaining-wall at any point, is in direct ratio to the head above that point, increasing from 0 at the level surface, to a maximum at the bottom. The total pressure against a vertical strip of unit's breadth increases as the area of a right-angled triangle whose perpendicular represents the height of the strip whose base represents the pressure on a unit of surface at the bottom; that is, it increases as the square of the depth. The sum of all the horizontal pressures is represented by the area of the triangle, and the result of this sum is equal to this sum exerted at a point one-third of the height from the bottom. (The center of gravity of the area of a triangle is one-third of its height.)

The horizontal pressure is the same if the surface is inclined instead of vertical.

The amount of pressure on the interior walls of a pipe has no appreciable effect upon the amount of flow.

Table 4.—Pressure in Pounds per Square Inch for Different Heads of Water.

(At 62° F., 1 foot head = 0.433 pound per square inch; 0.433 x 144 = 62.352 pounds per cubic foot.)

Head feet.	0	1	2	3	4	5	6	7	8	9
0	.....	0.433	0.866	1.299	1 732	2.165	2.598	3.031	3.464	3.897
10	4.330	4.763	5.196	5.629	6.062	6.495	6.928	7.361	7.794	8.227
20	8.660	9.093	9.526	9.959	10.392	10.825	11.258	11.691	12.124	12.557
30	12.990	13.423	13.856	14.289	14.722	15.155	15.588	16.021	16.454	16.887
40	17.320	17.753	18.186	18.619	19.052	19.485	19.918	20.351	20.784	21.217
50	21.650	22.083	22.516	22.949	23.382	23.815	24.248	24.681	25.114	25.547
60	25.980	26.413	26.846	27.279	27.712	28.145	28.578	29.011	29.444	29.877
70	30.310	30.743	31.176	31.609	32.042	32.475	32.908	33.341	33.774	34.207
80	34.640	35.073	35.506	35.939	36.372	36.805	37.238	37.671	38.104	38.537
90	38.970	39.403	39.836	40.269	40.702	41.135	41.568	42.001	42.434	42.867

Table 5.—Head in Feet of Water, Corresponding to Pressures in Pounds per Square Inch.

(1 pound per square inch = 2.30947 feet head; 1 atmosphere = 14.7 pounds per square inch = 33.94 feet head.)

Pressure Lbs.	0	1	2	3	4	5	6	7	8	9
0	.....	2.309	4.619	6.928	9.238	11.547	13.857	16.166	18.476	20.785
10	23.0947	25.404	27.714	30.023	32.333	34.642	36.952	39.261	41.570	43.880
20	46.1894	48.499	50.808	53.118	55.427	57.737	60.046	62.356	64.665	66.975
30	69.2841	71.594	73.903	76.213	78.522	80.831	83.141	85.450	87.760	90.069
40	92.3788	94.688	96.998	99.307	101.620	103.930	106.240	108.550	110.850	113.160
50	115.4735	117.780	120.090	122.400	124.710	127.020	129.330	131.640	133.950	136.260
60	138.5682	140.880	143.190	145.500	147.810	150.120	152.420	154.730	157.040	159.350
70	161.6629	163.970	166.280	168.590	170.900	173.210	175.520	177.830	180.140	182.450
80	184.7576	187.070	189.380	191.690	194.000	196.310	198.610	200.920	203.230	204.546
90	207.8523	210.160	212.470	214.780	217.090	219.400	221.710	224.020	226.330	228.640

Compressibility of Water.—Water is very slightly compressible. Its compressibility is from 0.000040 to 0.000051 for one atmosphere, decreasing with increase of temperature. For each foot of pressure, distilled water will be diminished in volume 0.0000015 to 0.0000013. Water is so incompressible that even at a depth of a mile, a cubic foot of water will weigh only about a pound more than at the surface.

SPECIFIC GRAVITY.

Distilled water is usually employed as the standard of unity in computing the specific gravity of substances.

The specific gravity of a substance is the proportion its weight bears to the weight of another substance of known density or equal volume, and which is used as a standard.

Specific gravity, when water is used as the standard of unity, is the ratio of the weight of a given volume of any substance to the weight of an equal volume of distilled water; and is found by dividing the first weight by the second.

Distilled water weighs 62.4 lbs. per cubic foot, and any substance a cubic foot of which weighs less than this, has a specific gravity less than one and will float in water, and any substance of greater weight per cubic foot, has a specific gravity greater than one and will sink in water.

Example: A cubic foot of cork weighs 15 lbs. What is its specific gravity?

$$15 \div 62.4 = .240 \text{ specific gravity.}$$

What is the specific gravity of lead which weighs 710 lbs. to the cubic foot?

$$710 \div 62.4 = 11.37 \text{ specific gravity.}$$

If a body floats in water, the volume of the part immersed is to the volume of the whole body as specific gravity of the body is to specific gravity of the water, which is 1.000 for distilled water and 1.029 for sea water.

When a body sinks in water, it loses such portion of its own weight as is equal to the weight of the water it displaces.

THEORY OF FLOATING BODIES, DISPLACEMENT, ETC.

If an immersed solid be of the same weight as the displaced fluid, it will remain at rest in the fluid, in any position it may be placed, because the upward pressure exerted on the solid is equal to its own weight.

As the specific gravity of any two substances are to each other as the weights of equal volumes of these substances, it follows that any solid will float when its specific gravity is less than that of the liquid, and will sink when greater.

Hence, iron sinks in water, but floats on mercury; some woods will float on the water but will sink in oil or alcohol. But if the iron is shaped into a thin-walled vessel or box, it will float on the same liquid in which it sank before, because its volume has been increased without increasing its weight; and it is thus sustained in equilibrium by the forces of buoyancy and gravity being balanced; as buoyancy is an upward pressure exerted upon a floating body by the fluid which has been displaced, and gravity is the weight of the floating body, these being balanced are necessarily the same; therefore the fluid displacement is exactly the same weight as the floating body, and is called the displacement.

If the water in which a ship is floating were to be solidified, and the vessel lifted out, leaving a mold or cavity the exact shape of the immersed portion of the ship's bottom, the amount of water required to fill this cavity would be exactly the same weight as the ship, and of the same volume as the immersed portion of the ship, and would be the exact displacement in weight or volume.

The amount of water, in volume of the immersed portion or weight, displaced by any floating body is called its displacement.

In the case of ships it is generally expressed in tons—one ton of sea water being equal to 35 cubic feet, and one ton of fresh water 36 cubic feet.

To find the displacement of a vessel, divide the volume of her body below the water-line in cubic feet by 35 for sea water or 36 for fresh water; the quotient will be the displacement in tons.

Example: What is the displacement of a float of regular box shape, 42 feet long, 20 feet wide, and 6 feet deep, outside measurements, with a draft in sea water of 2 feet?

Operation:

$42 \times 20 \times 2 = 1680$ cu. ft. immersed volume.

$1680 \div 35 = 48$ tons displacement.

TONS PER INCH IMMERSION.

The tons per inch immersion are the number of tons required to sink a vessel one inch at a given draft.

This varies at different drafts of a ship on account of the irregular shape of the hull.

The curve of tons per inch immersion is a curve representing at various drafts the tons (in salt water) of displacement per inch of depth of hull at that draft.

A float, or other vessel of regular shape like a box, would have the same tons per inch immersion at any draft.

The rule for finding the tons per inch immersion is given in Robinson's Naval Construction as follows:

If A = area of water plane at any draft

$A \times \frac{1}{12}$ = volume in cubic feet of layer one inch thick at that draft.

$A \times \frac{1}{12} \times \frac{1}{35}$ = displacement of tons in salt water of this volume.

Or tons per inch immersion at any draft $= \frac{A}{420}$, where A is area of water-line at that draft, salt water, or $\frac{A}{432}$ fresh water.

Explanation:

The area of water plane, in square feet, at the draft of which the tons per inch immersion is required, if divided by 12 will give the volume in cubic feet of a layer one inch thick at that draft; and in case of the above-mentioned float, is as follows:

$42' \times 20' = 840$ sq. ft. = area of water plane.

$840 \div 12 = 70$ cu. ft. = volume of layer one inch thick at that draft.

Salt water is taken at 35 cubic feet per ton and fresh water at 36.

Therefore to divide the volume, in cubic feet, of layer one inch thick by 35, will give the number of tons required to displace this volume, or sink the vessel one inch in salt water, or by 36 will give it in fresh water.

$70 \div 35 = 2.$ = tons per inch immersion, salt water,

or $70 \div 36 = 1.944$ = tons per inch immersion, fresh water

INCREASE OF DISPLACEMENT AND DRAFT DUE TO ADDING WEIGHT.

Any weight placed on a vessel increases its displacement a like amount, and increases the draft accordingly.

Example: Place a gun weighing 10 tons on the above-mentioned float, its draft being two feet, in salt water, before placing the weight on board; what would be the displacement and draft afterwards?

$42' \times 20' \times 2' = 1680 \div 35 = 48$ tons displacement before adding weight.

$48 + 10 = 58$ = tons displacement after adding weight.

$840 \div 420 = 2$ tons per inch immersion.

As two tons are required to sink the vessel 1 inch, 10 tons will increase the draft $10 \div 2 = 5$ inches.

Therefore the draft after placing weight on board will be 2′ 5″.

DIFFERENCE IN DRAFT IN SEA WATER AND RIVER WATER.

The weight per cubic foot of sea water is greater than that of fresh water, hence a vessel passing from sea to river water, the weight remaining constant, will sink more in the fresh water, and have a greater draft.

Sea water weighs 64 lbs. per cu. ft., and is taken at 35 cu. ft. per ton.

Fresh water weighs 62.5 lbs. per cu. ft., and is taken at 36 cu. ft. per ton.

Example: A ship having 1200 tons displacement, 12′ 6″ mean draft in sea water, and 6 tons per inch immersion at this draft; what would be her draft in fresh water?

First find volume displacement in fresh water, which is $1200 \times 36 = 43200$ cu. ft. From this, subtract volume displacement in sea water, which is $1200 \times 35 = 42000$ cu. ft. $43200 - 42000 = 1200$ cu. ft., which is volume of layer or water plane between fresh and sea water drafts .

As the tons per inch immersion at this draft are 6; then the change in draft in inches $= \frac{1}{6} \times 1200 \div 36 = 5.5$ in.; $5.5'' + 12'\ 6'' = 12'\ 11.5''$ draft in fresh water.

CHAPTER II.

MISCELLANEOUS SUBJECTS PERTAINING TO ALL TRADES.

(Represented in the Deck Artificer Branch.)

METHOD OF NUMBERING WATER-TIGHT COMPARTMENTS.

[Approved by the Department in its indorsement of Oct. 10, 1912, No. 8557-118, C. & R. No. 500A 135.]

Principal Divisions.—The ship shall be considered as divided into four principal divisions, lettered A, B, C and D, from forward aft.

Division A.—This shall comprise all the space between the stem of the ship and the forward transverse bulkhead of the forward boiler compartment.

Division B.—This shall comprise all the space between the forward transverse bulkhead of the forward boiler compartment and the after transverse bulkhead of the after boiler compartment, or where boiler compartments are located forward and aft of engine rooms, it shall comprise all the space between the forward and after transverse bulkheads of the forward group of boiler compartments and between the forward and after transverse bulkheads of the after group of boiler compartments.

Division C.—This shall comprise all the space between the after transverse bulkhead of the after boiler compartment and the after transverse bulkhead of the after compartment assigned to main propelling machinery or auxiliaries of main propelling machinery, or where boiler compartments are located forward and aft of the engine rooms, Division "C" shall comprise all the space between.

Division D.—This shall comprise all the space between the after transverse bulkhead of the "C" (or "B") division and the stern of the ship.

These divisions shall be considered as extending from the keel to the highest deck in the line of the bulkheads, or the bulkhead prolonged. In case the bulkheads do not extend to the highest deck any spaces between decks that extend through two of the principal divisions shall be numbered as described in the case of a compartment situated entirely in the forward division of the two in which it is placed, and shall have this number alone.

Rules for Numbering.—All numbers in each division shall begin at the forward end of that division. The forward compartment of the double bottom in each division shall be A-1, B-1, C-1, or D-1, according to its respective division. The space next above the inner bottom, and the hold compartments where there is no inner bottom, shall be, starting from forward as above, A-101, B-101, C-101, or D-101, according to its division. Each successive level shall have a new series of numbers always beginning with the next hundred. The greatest number of levels (*i. e.,* decks, platforms, etc.) existing anywhere in the ship shall determine the highest series of hundreds to be used. By this method all compartments on a given level will have numbers in the same hundreds series. Where a platform or deck steps down less than a deck height, no change in the hundreds series shall be made on account thereof.

Compartment Letters.—The numbering of the compartments shall be prefixed always with the letter indicating the general division of the ship in which it is placed, as A-21, B-3, etc. All magazines, projectile rooms, ammunition rooms, torpedo warhead room, etc., containing explosives of any kind shall have the letter M after the number of the compartment.

Compartments on the starboard side of the ship shall have odd numbers; those on the port side, even numbers.

Fig. 22 illustrates the general distribution of the numbers and divisions.

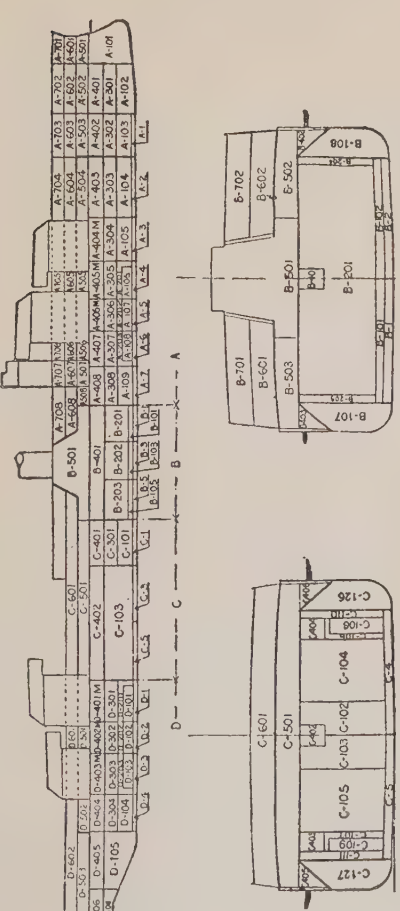
A-101
A-102
A-103
A-104
A-105
A-301
A-302
A-303
A-304
A-401
A-402
A-403
A-404
A-405
A-406
A-407
A-408
A-501
A-502
A-503
A-504
A-601
A-602
A-603
A-604
A-701
A-702
A-703
A-704
A-707
A-708
A-601
A-602
A-603
A-604
A-605
A-606
A-607
A-608
A-501
A-502
A-503
A-504
A-505
A-506
A-507
A-508
A-401
A-402
A-403
A-404
A-405
A-406
A-407
A-408
A-301
A-302
A-303
A-304
A-305
A-306
A-307
A-308
A-109
A-104
A-103
A-102
A-101
B-501
B-401
B-201
B-202
B-203
B-101
B-102
B-103
B-105
B-108
B-107
B-201
B-501
B-601
B-701
B-502
B-602
B-702
B-503
C-601
C-501
C-401
C-301
C-101
C-402
C-103
C-126
C-104
C-102
C-103
C-105
C-127
C-106
C-108
C-109
C-111
D-105
D-101
D-102
D-103
D-104
D-105
D-201
D-202
D-203
D-204
D-205
D-206
D-301
D-302
D-303
D-304
D-401
D-402
D-403
D-404
D-405
D-406
D-501
D-502
D-503
D-504
D-601
D-602
A
B
C
D

FIG. 22.

NOMENCLATURE OF DECKS.

[Approved by the Department in its indorsement of Nov. 9, 1912, No. 8557-118:1, C. & R., No. 9090-A-21.]

The following nomenclature of decks shall be followed for United States naval vessels:

Main Deck.—The highest deck extending from stem to stern shall be called the "main deck."

A partial deck above the main deck at the bow shall be called the "forecastle deck"; at the stern, "poop deck"; amidships, "upper deck."

The name "upper deck," instead of "forecastle deck" or "poop deck," shall be applied to a partial deck extending from the waist to either bow or stern.

A partial deck above the main, upper, forecastle, or poop deck and not extending to the side of the ship, shall be called the "superstructure deck." [1]

Decks Below Main Deck.—A complete deck below the main deck shall be called the "second deck." Where there are two or more complete decks below the main deck they shall be called the "second deck," "third deck," "fourth deck," etc.

A partial deck above the lowest complete deck and below the main deck shall be called the "half deck."

A partial deck below the lowest complete deck shall be called the "platform deck." Where there are two or more partial decks below the lowest complete deck, the one immediately below the lowest complete deck shall be called the "first platform"; the next shall be called the "second platform," and so on.

Protective Decks.—Decks which for protective purposes are fitted with plating of extra strength and thickness shall be further defined, for technical purposes, as "protective" and "splinter," in addition to their regular names. Where there

[1] The bureau interprets this as meaning that a deck structure, although extending to the line of the ship's side is not an upper deck unless the side plating proper of the ship is carried up and connected to it.

is only one such deck it shall be defined as "protective" and where there are two, that having the thicker plating shall be defined as "protective" and that having the thinner plating shall be defined as "splinter" in addition to the regular names.

Where a protective deck is stepped a complete deck height the respective portions shall be distinguished by means of the terms "middle protective section" and "forward (or after) protective section" in addition to the regular names. Where a splinter deck is stepped a complete deck height, the respective portions shall be similarly distinguished.

Where a portion of the protective or splinter deck is sloped the sloping portion shall be defined as the "inclined protective deck" or "inclined splinter deck."

INSTRUCTIONS FOR FITTING DRAFT MARKS AND GAGES.

Figures for Draft of Water.

Type and Material.—Draft marks shall be in Arabic numerals, except as specified below, and for numbers greater than 10 the last figure only of the number shall be used. Draft marks shall be cast or cut out of sheet metal and shall be secured by screws. Steel numerals and steel screws shall be used on unsheathed vessels. Where they come upon metal parts, and for metal vessels, the positions of the draft marks shall be accurately located by punch marks or light scores. For torpedo vessels and other vessels of special light construction, metal draft figures shall not be fitted but the figures shall be outlined by center punch and painted.

Number and Location.—In every case there shall be one set of draft marks as far forward as practicable, and a second set as far aft as practicable, each consisting of a line of marks on each side. Each line of marks shall be as nearly as possible perpendicular to the designer's water-line, but minor variations, in order to follow contours of stem and stern, may be made when desirable, especially at some distance above or below the water-line.

The forward and after draft marks shall be located on vessels of ordinary form, from a base line parallel to the designer's water-line and coinciding with the bottom of the straight keel; in case of vessels with a drag, from a base line parallel to the designer's water-line intersecting the bottom of keel at mid-perpendicular, and for vessels with rocker keels, from a base line parallel to the designer's water-line and tangent to the bottom of keel at its lowest point.

Additional Sets.—Additional sets of draft marks shall be placed abreast the lowest projection of the keel, skeg, rudder, or tips of propeller blades if they project below the base line fixed in accordance with the foregoing, such draft marks reading from this lowest projection.

Exceptional Cases.—In case of vessels that are so much cut up aft, that after draft marks may, under certain conditions of trim indicate a draft of water materially greater than actual maximum draft, the matter shall be referred to the bureau for instructions.

Dimensions of Numerals.—For vessels requiring only the two sets of draft marks, all draft marks shall be in Arabic numerals, 6 inches in projected height, the even foot indicated being the bottom of the mark. For vessels requiring the additional set of draft marks, the marks on the bow and the marks showing the maximum draft shall be in Arabic numerals, 6 inches in projected height; the marks on the stern shall be Roman numerals, 3 inches in projected height, a horizontal mark being placed between them with its lower edge at the 6-inch interval.

Cases not covered by the above shall be referred to the bureau.

Instructions for Application.—Draft marks shall be painted as specified in the Instructions for Painting and Cementing Vessels of the United States Navy. (Appendix 6.)

For new vessels, the draft figures shall be laid off accurately before the vessel is launched and shall be checked by the superintending constructor, certified correct and so noted in the

General Information Booklet, finished plan No. 38. The same procedure shall be followed for vessels built at navy yards, and also in the case of repairs when draft figures are disturbed or when new draft figures are fitted and the permanent location marks are not well defined. When a vessel is docked without draft marks certified as above, or for which the draft marks do not conform to these instructions, they shall be corrected and the fact reported to the bureau.

Internal Gages.—Internal draft gages shall be provided with scales adjusted to read from the base line defined in Section 3.

Location.—The gages shall be located on the center line of the vessel and as nearly as practicable at equal distances from the *corresponding* external draft marks (*i. e.,* from the external marks reading from the same base line) in order that the mean draft as determined from the gages may be the same as that determined from the corresponding external marks.

A board bearing the following notice shall be fitted adjacent to each gage at each station for reading:

NOTICE.

Draft Gages.

1. Before reading the draft, run sufficient water through the piping to insure that the water in the piping is of the same density and temperature as the water outside.
2. Draft should be read only when the ship is dead in the water and the propellers still.
3. The draft shown by this gage represents the draft measured from the base line *at* the gage; for extreme draft use the *outside* draft figures.
4. After reading the draft, the sea valve should be closed.

HOW TO READ THE "DRAFT" OF A SHIP.

The draft figures are placed on ships on each side at the bow, the stern, and amidships. Only the units of the figures represented are used; for example, a battleship that usually draws about 24 feet would have the figures arranged as follows: Beginning at 10 feet above the bottom of the keel, and extend-

ing in vertical line, will be 0, 1, 2, 3, 4, 5, 6, 7, 8, 9, 0, 1, 2, 3, 4, 5, 6, 7, the first 0 meaning 10 feet, the second 0, 20 feet, and the last figure 7, meaning 27 feet. These figures are 6 inches in height, and placed 6 inches from the top of each one to the bottom of the next figure above.

Example: The draft known to be about normal, the water is at the bottom of the "3" in the upper series of figures, the draft would be 23 feet; if half-way up on the "3," it would be 23 feet 3 inches, if at the top of the "3," 23 feet 6 inches; and if half-way between the top of the "3" and the bottom of the "4," it would be 23 feet 9 inches.

When the surface of the water is in motion, an average may be struck for rough calculation.

Example: The crest of the average wave runs up to the bottom of the "6" (26 feet), and the valley of the wave down to the bottom of "2" (22 feet): just half-way between these two points would be the draft, which is 24 feet. A more accurate way of taking the draft in rough weather is to lower a long glass tube down by the side of the figures, sinking one end far enough below the surface to avoid the motion, when the water will run up and stand still at the true draft.

INSTRUCTIONS FOR MAKING JOINTS AND OBTAINING WATER-TIGHTNESS AND OIL-TIGHTNESS.

In Piping, Flange Connections to Bulkheads, Decks, Etc., at Manholes, Hatches, and at Bolted-up Joints Generally, on Vessels of the United States Navy.

Issued jointly by the Bureau of Construction and Repair and the Bureau of Steam Engineering.

All joints and connections to the water-tight and oil-tight structure of the vessel, including those for machinery, piping, and fittings, under the cognizance of other bureaus of the Navy Department, must be made to the satisfaction of the Bureau of Construction and Repair.

Pipe Flanges and Connections.—All flanges of piping of oil and water systems and connections of same, and of steam systems, to bulkheads, decks, outside plating, and inner bottom

plating shall be faced, except stamped flanges with faces true. Flanges of these systems in way of bulkheads, decks, etc., shall be jointed flange to flange clear of the structure.

All flange-to-flange joints (galvanized or not galvanized) of water systems, to be made up with $\frac{1}{16}$-inch gum with one insertion of cloth. Flange-to-flange joints for oil systems shall be made with trunk board, saturated with a mixture of 20 parts wax and 10 parts varnish or by such other method as may be approved by the bureau.

Flange-to-flange joints of ventilation system not faced or not stamped true, will be made up with $\frac{1}{8}$-inch gum with two insertions of cloth. Those faced or stamped true shall be made up with $\frac{1}{16}$-inch gum having one insertion of cloth.

Flange joints of water and other systems, to water-tight bulkheads and floors, to metal decks, to outside plating, and to inner bottom plating or other parts of structure shall be made up with two layers of No. 10 canvas soaked in raw linseed oil and painted with thick red lead.

Scraped joints with red lead will be used in special cases where directed. In cases of wood decks the joints will be made up with two layers of No. 10 canvas soaked in raw linseed oil and painted with thick *white* lead. Flange joints to water-tight bulkheads, etc., where same are part of fresh-water tanks, will be made up with $\frac{1}{8}$-inch gum with two insertions of cloth.

For oil-tight work, joints to vessel's structure, including inner and outer bottom plating and tanks, will be made up with two layers of No. 10 canvas saturated with a mixture of $97\frac{1}{4}$ parts pine tar and $2\frac{3}{4}$ parts shellac, or by such other method as may be approved by the bureau.

Through bolts for the joints referred to in preceding paragraphs will be packed under head and washer for nut with grommets of lampwick or hemp, thoroughly soaked in red lead for water-tight work and of lampwick soaked in shellac and pine tar, shellac and red lead, or of untarred hemp thoroughly soaked in boiled linseed oil for oil-tight work. Washers in all cases to be under nuts, and where required, under both head

of bolt and nut. Through bolts for connection to inner bottom plating, water and oil tanks to be tapped through plating, and head and washer to be packed as required to suit the respective spaces.

Stuffing Tubes.—The water-tightness at decks and bulkheads where screwed water pipes, steam pipes, conduits and voice pipes, air piping, etc., pass through same shall be obtained by means of stuffing tubes and lock nuts and washers, about as shown on General Type Plan for stuffing tubes, or as may be approved by the bureau. Voice tubes where passing through stuffing tubes or holes in ship's non-water-tight structure and where supported by hangers shall be insulated with a material to be approved in order to avoid metal-to-metal contact.

Miscellaneous Flange Connections.—Screwed flange connections similar to deck-plate castings shown on standard plan for deck plates and indicators will be made up in general with red-lead putty under face flange and with leather under lock nuts.

Flange connections to bulkheads, outside plating, and other metal structure, for such fittings as frames of air ports, deck lights, bulkhead and door lights, manholes, water-tight doors, coaling scuttles, magazine light boxes, etc., will be made up with red lead. Fittings of this class when connected to wood decks will be embedded in white lead with grommets and washer.

Miscellaneous Fastenings.—Where not riveted, brackets and castings, tank straps, hangers, etc., to the water-tight structure will, except when approved otherwise, be secured by bolts tapped into the bulkhead, deck, inner bottom, etc., and fitted with grommets and washer under the head and nut, the nut being placed on the bracket or fitting side. Connections shall be by rivets in all cases where the plating is less than 12 pounds, or they shall be bolted to clips riveted to the structure. All joiner work will be secured to clips riveted to water-tight members or to furring strips bolted to stiffeners, and not by screws through water-tight work. If in special cases by authority of

the superintending constructor bolts not tapped into the plating are used, they must be packed under head and under the washer for nut with grommets, the nut being placed on the bracket or fitting side. Where symmetrical brackets or castings on opposite sides of a bulkhead, etc., are secured by the same bolts, the castings must have machined faces and be seated on No. 10 canvas thoroughly soaked in raw linseed oil and painted with thick red lead; bolts need not be tapped into the structure, but must be packed under the head and under the washer of the nut with grommets, as previously referred to. The fitting of symmetrical castings secured by the same through bolts will not be approved unless where found to be necessary to meet some special conditions. In small permanent fittings, such as label plates, tap screws without nuts may be used, care being taken that the plating is of proper thickness and that in the selection of taps the threading of the holes is such as to insure proper hold and the proper fit of the tap screws. Tap screws fitted without nuts should be dipped in white lead before being entered, and when seated they should be carefully center punched or burred over.

Materials of Bolts, Nuts, Packing and Gaskets.—Bolts for connections so located that they are liable to come in contact with bilge water will be of wrought iron or steel, galvanized, with rolled naval brass nuts; where not liable to come in contact with bilge water, the bolts and nuts will be of wrought iron or steel, except that nuts on upper sides of decks are to be of naval brass.

Sheet packing for joints to be in accordance with the latest specifications for this material issued by the Bureau of Supplies and Accounts.

Gaskets.—Gaskets for water-tight doors, manholes, and for water-tight hatches secured by dogs shall be generally of rubber. Water-tight joints in bolted manholes and similar plates shall be set up with approved canvas soaked in raw linseed oil and painted with thick red lead.

Gaskets for oil-tight manholes and hatches secured by dogs shall, in general, be of square braided flax treated with wax and tallow.

Gaskets for oil-tight joints of bolted manholes and similar plates shall be, in general, of trunk board treated with wax and varnish.

Exceptions.—Where the foregoing instructions cannot be consistently carried out, or where exceptional conditions require connections of special design to maintain effective water-tightness or oil-tightness, propositions covering the case in question are to be submitted to the bureau for its action.

In connection with joints and water-tight connections and fittings, attention is invited to the bureau's standard sheets and general type plans enumerated in Appendix 17, with special reference to General Type Plans for stuffing tubes, and for flanges.

SOUNDING COMPARTMENTS.

For the purpose of sounding to detect the presence of water, tubes are fitted in compartments at the lowest point, extending up through the deck above, terminating in a flush plate with water-tight screw cap, on which is marked "Sounding Tube, A-10," assuming that to be the number of the compartment. The sounding rod is of metal, 2 feet long, graduated in inches, with a line attached to one end long enough to reach to the bottom of the deepest compartment. To sound, wipe the rod off dry, chalk a spiral line from one end of it to the other, lower it down through the tube, and when the rod is felt to touch the bottom, withdraw it and note the depth of water, if there should be any, which will be shown on the chalk-line. If at sea and the ship is rolling, drop the rod in the tube and withdraw it quickly while the ship is about on even keel.

THE PROPER WAY TO OPEN AND CLOSE WATER-TIGHT DOORS, HATCHES, AND AIR-PORTS.

When opening, loosen up the dogs or bolts nearest the hinges first, and when closing, tighten those on the opposite side from the hinges first; this prevents the door from springing and

makes it much easier to get the remaining dogs up or down, as the case may be. It will sometimes be found, that the oblong or elliptical pin holes in the hinges are not smooth, or rather they have a shoulder in them, formed either by not finishing them smoothly after the holes were drilled in the hinges, or they may wear after constant use in such way as to form a little shoulder in one side of the hole. In such cases, it may occur that if the dogs on the opposite side from the hinges are put down hard before any dogs near the hinges are put down, the hinge pin will jam against the shoulder in the pin hole and prevent the door from going down tight against the gasket on the hinge side. In order to avoid this, it is best to first catch the door with only one dog on the opposite side from hinges, not putting this dog down tight, but just sufficient to hold the door closed, then put down two dogs snugly on the hinge side, after this set upon all dogs evenly to insure an even bearing all around.

If the water-tight door is in good condition, it is not necessary to put the dogs down as hard as you can; and dogs should never be driven down; tighten them evenly all around, beginning as instructed above, and go over them two or three times, setting up a little on one after the other successively till all are down firmly, which will give the door an even bearing all around. These instructions should be strictly adhered to in closing air-ports, because an uneven strain on the frame of the port will almost invariably crack the lens if the ship gets to working in a seaway, or the port is struck by a heavy sea.

CARE OF WATER-TIGHT DOORS, ETC.

The rubber gaskets of water-tight openings should never be painted. If they do get painted by accident, the paint should be removed immediately with turpentine; if it is hard and dry, it may be taken off with sandpaper or a blunt scraper, care being taken not to cut the rubber. The bearing surfaces of doors and frames that come in contact with the rubber gasket should be kept bright with sandpaper or emery, and free from paint and

grease. Doors may be tested as follows: Chalk the bearing surface, then put the dogs down as instructed above, open the door and note result; if there are any places on the gasket that did not touch, take the gasket out at such places and line up behind it with thin pieces of wood, pasteboard, paper, or other material. Sometimes when a gasket is badly worn or cut, or the bearing surface otherwise made uneven, it may be turned and replaced with good results.

The dogs and hinges should be kept well lubricated. A heavy grease that will not run, such as "Albany grease," is best because it lasts longer and does not run down over the paint work. Dogs and hinges, and threads on air-port bolts should be kept free from paint that will gum and clog the working parts, which would hinder operation.

AUXILIARY MACHINERY.

On the latest types of ships the principal auxiliaries, which were formerly operated by steam, are now driven by electric motors; these comprise the steering apparatus, motor geared direct to tiller shaft, and also electro-hydraulic (see steering appliances, page 115), anchor engine, capstan, deck winches, etc. The motors, switches, panels and other electrical appliances are under the cognizance of the engineer officer on ships in commission, therefore no attempt will be made here to give any instructions in the care and operation of the strictly electrical apparatus or the duties of electricians.

The original mechanical features of the above-mentioned auxiliaries remain practically the same, however, as when they were driven with steam, and the same precautionary measures in the care, operation and maintenance of these parts should be followed.

For example, to get ready for heaving up anchor with an electrically operated windlass, the motors should be turned, with the pawls on all wild-cats thrown out of clutch, to make sure the motors are in working order, and that all wild-cats

not intended to be turned are clear; after which throw in the pawls of the wild-cat from which the anchor is riding, turn the motor slowly till the pawls of the clutch take up against the lugs on the wild-cat, come up the brake band and heave in the chain sufficiently to take the strain off of the chain stoppers; after the chain stoppers are removed the windlass is ready to heave up the anchor.

In getting ready to let go anchor, the same procedure of turning the motors with all wild-cats disconnected, should be followed to make sure that everything is clear for running, and that the motors are ready for use in case it should become necessary to heave in chain.

All working parts of the windlass should be kept in proper adjustment, free from paint and well lubricated; particular attention being given to the worms and worm gears and thrusts on the horizontal shaft.

Electrically driven capstans and deck winches are fitted with the usual compound gearing, consisting of pinion and clutch gears on intermediate shafts, for light and heavy loads; these gears and their working parts should be kept free from paint and well lubricated, care being taken to prevent oil holes getting stopped up and to see that oil grooves in the bearings are kept clear. Deck winches being exposed to the weather, should be kept well covered when not in use. The paint work of these machines should never be scrubbed with sand because the sand will get into bearings and cut the journals. Where oil holes are not covered or fitted with oil cups, wooden pegs should be kept in them to prevent grit or sand from getting into the bearings.

INSTRUCTIONS FOR OPERATING ANCHOR ENGINES.

To get the anchor engine ready for heaving up, first oil the principal working parts; see that the clutches on both wild-cats are thrown out, so the engine may be turned over without heaving in chain; open wide the exhaust and all drains from

cylinders, steam chests, etc.; crack the throttle valve just enough to allow a little steam to pass through the engine without turning it till the cylinders and pipes get warmed up; then open throttle a little more, allowing the engine to turn over slowly, reversing it occasionally. When the thumping and hammering noises cease, caused by water in the cylinders, the engine may then be turned over full speed a few times, after which stop the engine and throw in the clutch on the wild-cat from which the anchor is riding, turn the engine ahead slowly till the pawls of the clutch take up against the lugs on the wild-cat, then come up the friction band, heave in the chain about 12 inches to take the strain off the chain stoppers so they may be removed, and after chain stoppers are off, the anchor engine is ready to heave round.

In getting ready to let go anchor, the engine should be warmed up and turned over as instructed above, taking care that the pawls on both wild-cats are thrown out, and that the chain is all clear for running. The precaution of having the engine ready for immediate use when letting go anchor is required because it often occurs that too much chain runs out, or for other reasons it becomes necessary to heave in some of the chain.

The same process of warming up slowly should be observed in starting steam winches, steering engines, and all other steam machinery. In freezing weather, steam winches on deck, and other steam machinery exposed to the cold, should have the steam cut off in the engine room, and all pipes thoroughly drained when not in use. This is done because the steam that remains in the cylinders, etc., would condense and freeze, often bursting pipes or other fittings.

To Get Swivels Over the Wild-Cat.—When swivels slip and do not catch well on the wild-cat, a good way to get them over is to begin heaving in chain as fast as the anchor engine will run, when the swivel is about 20 feet from the wild-cat, and con-

tinue to heave fast till it is within a foot of the wild-cat, then slow down suddenly to as slow speed as the anchor engine will turn over, which will cause the chain to slacken on account of the momentum of the ship, and the swivel will go over easily. Where swivels slip very badly, a piece of old gunny sack or old canvas wrapped around the swivel just as it is going on the wild-cat will often prevent slipping.

A Few Things to Remember When Operating the Anchor Engine.—Pay strict attention to the officer from whom you are getting orders, obey them promptly, and as quickly as possible without confusion.

When the order is given to "stand by" the anchor, which ever one it may be, see that everything is clear of the chain on that side, sing out down the chain pipe into the chain locker, thus, if it is the starboard anchor: "Stand clear the starboard chain."

Always see that the worm-screw box is well slushed with grease.

"Veer chain" means to allow the chain to run out.

"Vast heaving," to stop when heaving in chain.

"Heave round," to begin heaving in chain.

"Heave handsomely," to heave slowly and cautiously, being ready to stop at an instant.

WINDLASS AND ANCHOR HANDLING ON A MODERN BATTLESHIP.

There are three wild-cats located on the upper deck, two of which are electrically operated, and located at frames 24-25, 12 feet apart. One, called the "dummy," equipped with brake band only, to be used to ride by, is located at frames 22-23, 12 feet 9 inches to the starboard of center line. These wild-cats are designed for standard 3-inch stud-link chain made at the Boston Navy Yard.

Three anchors are carried; two of which are stowed in the port hawse pipes and one in the starboard after hawse pipe.

The chains from the port anchors are led around the power-operated wild-cats and that from the starboard anchor around the "dummy" wild-cat.

The anchors are Baldt type, weighing 18,000 pounds.

A total of 480 fathoms of chain is carried, 180 fathoms attached to each of the port anchors and 120 fathoms attached to the starboard anchor.

In addition to the brake band control of the wild-cats, which is by wheel handles, mounted on brackets on the bed plate, chain compressors are fitted under the upper deck to each of the three chain pipes and operated by tackles. Twelve deck stoppers, with pelican hooks and turnbuckles are also provided for securing to pad eyes attached to the deck in the vicinity of the chains.

A set of portable shear legs is provided, stepped on the deck in the vicinity of the hawse pipes, port or starboard, for use in catting the anchors. These shear legs are stowed between upper and superstructure decks at frame 59½.

A stand for the electrical operation of the wild-cats is located on the upper deck on the starboard side at frames 27-28. Another controller and the transfer switches are located in the windlass room below, compartment A-47, on the first platform deck.

The gear operating the wild-cats consists of two motors at the ends of a horizontal line of shafting, and two single thread worms on this shaft which engage the worm wheels keyed to the lower ends of the vertical spindles carrying the wild-cats. The weight of the spindles is borne by the decks through which they pass. These worms are right and left hand so as to turn the vertical shafts in opposite directions, the chain being led from the anchors to the inboard side of the wild-cats.

The horizontal shaft has two thrust bearings located between the worms each consisting of seven collars 12⅝ inches in diameter and having a bearing surface of about 635 square inches. A clutch located between the two thrust bearings

permits a motor to operate its wild-cats; while the other motor and wild-cat remain stationary. The electrical connections are not arranged, however, to permit both wild-cats to be operated independently at the same time. The wild-cats are equipped with locking heads and when one is unlocked and held by the brake, both motors can be used to turn the other wild-cat.

To summarize the action of the windlass: Both wild-cats can be operated by both motors with the clutch in.

Both wild-cats can be operated by one motor with the clutch in.

One wild-cat can be operated alone by both motors with the clutch in and the other wild-cat unlocked at the head and held by the brake band.

One wild-cat can be operated alone by the motor on the other side of ship with the clutch in and the other wild-cat head unlocked.

One wild-cat can be operated alone by the motor on its own side, with the clutch out, or with the clutch in, provided the other wild-cat head is unlocked.

Caution.—It is possible to operate one or both wild-cats with both motors connected in series, but this should never be attempted with the clutch out.

On the latest battleships the windlass is of the vertical type, having three wild-cats located on the upper deck and carried on vertical shafts extending to the third deck. The lower ends of these shafts carry worm gears driven by worms on a horizontal transverse shaft, the shaft being driven by two motors. The wild-cats are designed for 3½-inch stud-link chain.

Three main anchors, weighing 20,000 pounds each, of the Baldt type are used on these ships.

Automatic distant control is provided for the driving motors by means of contactor controller in the windlass room, operated selectively, either by two master controllers on the weather deck or by one in the windlass room.

The worm screws on the main driving shaft have right-hand threads on the port worm and left-hand threads on the center and starboard worms. Provision is made for the following operations: (a) Starboard motor operating alone; (b) port motor operating alone; (c) both motors operating in series; (d) both motors operating parallel; (e) both motors operating simultaneously, independently or in opposite directions.

CAPSTAN.

This ship is equipped with one electrically operated capstan, located aft at frame 120 center line, manufactured by the American Engineering Company, Philadelphia, Pa. The motor with the necessary shafts, gears, worm and worm wheel is mounted on one cast-iron bed plate, which is secured to the deck in the capstan room located on the second and protective deck. Connection to the gypsy head located on the main deck above is by means of a vertical shaft.

The capstan is compound geared and is capable of hoisting 4000 pounds at 200 feet per minute, and also, by using the reduction gearing, 16,000 pounds at 50 feet per minute and on the latest ships, 5000 pounds and 20,000 pounds, respectively.

When operating at high speed, the motor drives the capstan through spur gears of the same size, and intermediate shaft, worm and worm wheel, the latter being located on the vertical shaft. When operating at slow speed, the motor drives the capstan through a pinion which engages with the clutch gear located on the intermediate shaft. In the first case the ratio of motor R. P. M. to that of the intermediate shaft is 1 to 1, in the latter case the ratio is 4.067 to 1.

The spur gear and also the clutch gear are free to rotate loosely on the intermediate shaft. Both are provided with an extension on the hub, forming one of the fixed members of the jaw clutch. The movable member of the clutch is located midway between these fixed members, and is keyed to the inter-

mediate shaft, but is free to slide longitudinally. The clutch is operated by a lever secured to the movable member, a slotted socket in the lever fitting a pin located in the movable member. The lever is held at the bottom by means of a pad secured to the bed plate. Means are provided for locking the lever in both the running positions and the "off" position.

The capstan is provided with a single gypsy head which is designed to be removable and can be stowed below. The gypsy head is provided with the usual pawls for holding the load.

The capstan is normally operated by the master controller which is located in proximity to the gypsy head on the main deck. It is also possible to operate the capstan locally by means of transfer switches on the main control panel located in the capstan room below.

VENTILATION.

Mechanical or artificial ventilation of ships in the Navy is successfully accomplished by drawing in fresh air and driving it through ducts or pipes into all spaces where natural ventilation is not sufficient, or by exhausting air from the spaces to the atmosphere. Electrically driven fans, blowers or exhausters, ranging in size from 200 to 20,000 cubic feet capacity per minute for this purpose are located in different parts of the ship, with their suctions connected to ventilators, cowls, or other openings from which fresh air can be obtained, and discharge into ducts extending into the different sections of the ship; from these ducts branch pipes connect to all officers' quarters, bath rooms, pantries, store rooms, passages, magazines, and other compartments below decks.

A bell-shaped cut-off louver, with wire mesh over end, is fitted at the termination of these branches in all compartments except the living quarters of officers, where nickel-plated cut-off louvers, having universal joints, are fitted. The wire-mesh-covered louvers are put in store rooms, etc., to prevent trash, pieces of paper, etc., which sometimes come through the system, from getting into these places; the wire on these louvers can

be removed for cleaning, and this should be done occasionally to prevent the obstruction of ventilation.

Where the ventilation pipes pass through water-tight bulkheads, a float-ball, self-closing valve is fitted, so that in case the compartment on either side of the bulkhead should become filled, this ball floats up and prevents the water from flowing into the adjacent compartment, or further flooding the ventilation system. These ducts and air pipes are made of thin sheet iron (galvanized) and are not water-tight under pressure; hence the necessity of this automatic fitting. The casing or body of the ball valve has a screw plug fitted into the bottom, by which it may be drained, should water get into the pipes, which is does sometimes. A little water in this float valve will sometimes raise the ball sufficiently for the force of the passing air to lift it up to and against the seat, which, of course, will shut the ventilation off from that part of the system. To remedy this, take out the drain plug and allow all the water to run out of the valve, after which the blower that is supplying this duct should be slowed down, or stopped, to take the pressure off the ball, which will drop back in place; the plug should be left out, however, until it is seen that the ball does drop, as it may stick to the seat. When the ball is down, put in plug and start the blowers.

On the later type of battleships the use of automatic float-ball valves at bulkheads has been discontinued, and all ventilation systems are so arranged that the water-tight subdivision of the vessel is not impaired.

The water-tight subdivision is maintained to the same height as the test head for main structural bulkheads. Below the level so determined, separate branches are led from the mains to each of the compartments to be ventilated, in such manner that no compartment can be flooded from another through the ventilating pipe.

Pipes or ducts for natural exhaust are fitted to coal bunkers, magazines, steering rooms, and such other compartments where

gases are likely to accumulate, or which are not opened often enough to allow a sufficient change of air.

Mechanical exhaust is provided for water closets and other places where offensive odors accumulate, and also sometimes in places where there is excessive heat, such as dynamo rooms, engine rooms, evaporator rooms, etc. The machinery for the exhaust systems is similar to that used for supplying fresh air, except that it draws the air from the compartments and discharges into the atmosphere.

DOCKING AND UNDOCKING SHIPS IN DRYDOCK.

Preparation of Dock.—It should be ascertained from plans of the ship and plans of the dock (if there are no plans of the dock, actual measurements should be made) if the ship will pass through the gate, clearing bilge keels, etc., and if the dock is of sufficient size to clear everything when the ship is landed and caisson replaced.

For ships with docking keels, such as battleships, locate the extreme stern on the main keel blocks aft, and from this point carefully lay out the entire length of the vessel.

Half breadths of the docking keels are laid out from the center of the main keel blocks, which distances are shown on the docking plan. Place the centers of the auxiliary and main docking keel blocks at their respective distances from the center line of the keel; such of these blocks as will interfere with easy access to valves or openings in the hull should be moved sufficiently in an athwartship direction to clear them, but still to be in position to take the docking keels; transfer the position of the ship's stern from the main keel blocks to the coping on each side of the dock; from this point lay out the entire length of the ship and mark it on the coping of the dock, each side.

At the point representing the stern on the dock coping, place two vertical straight edges securely fastened to a block, parallel to each other, and in line with the stern mark on the keel blocks

and other side of dock coping; these are sighting battens to determine when the ship is in the proper position. Place similar straight edges at the bow marks, the head of the dock and on the caisson, the latter two to be in line with the center of the keel blocks, and a fore and aft line through the center of the dock for sighting the center of the ship. Plumb bobs may be suspended across the dock at the bow and stern marks showing the center of the dock at these points. This should always be done at end of ship near the caisson, as the caisson when sunk in the grooveway may vary several inches athwartship from its position when sights were fitted.

All docking blocks should be well secured together and to the floor of the dock to prevent them from floating when the dock is flooded; iron dogs or side strips of wood are used for this purpose.

Clear the dock of all unnecessary material, and see that the top surfaces of all blocks are clear and securely dogged down, verify all measurements, and the dock is ready to be flooded for receiving the ship.

For docking ships that have no docking keels, such as cruisers, colliers and torpedo-boats, the same procedure for locating the ship in dock is followed as is shown in paragraphs above; for this class of vessels, sliding bilge blocks are used, and are drawn under after the vessel lands on the keel blocks. The positions of the bilge blocks are located from the docking plan, taking care that they do not strike the bilge keels or cover any openings in the hull. Bilge blocks should have a bearing opposite a longitudinal; the heights of bilge blocks are obtained from the docking plan and marked on a vertical batten at each sliding bilge block log, or bearer, in the dock, and the tops of the blocks are built up to these marks. All capping and sections of bilge blocks should be dogged securely together, care should be taken to have the bearer logs clear so that the bilge blocks will slide easily, and each block should be tested to see that it does run clear, after which the blocks are

run outboard as far as possible. Besides a line to haul blocks under the ship, a backing line should be fitted to the blocks, as occasions often arise when it is desirable to haul a block back after attempting to haul it under the ship.

For these vessels shores are used to brace the sides of the ship while in dock, the lengths of which are obtained by deducting half the width of the ship from half the width of the dock at the point the shore is to be placed. a line of shores should be placed about 18 inches above the water-line, and should be set with the inboard end slightly elevated to give a better bracing purchase, and also to prevent the shore from dropping in the dock should it become loose, and principally to prevent breaking shores when a vessel is floated at undocking; as an additional precaution, the inboard ends of the shores should be made fast to cleats on deck with lines. Shores when cut the proper length should be distributed along the coping of the dock as near as possible to the places they are to be used; the small end of the shore pointed toward the dock with a line attached for hauling it up to its place aboard ship; shoes (or filling pieces) and wedges should be provided at each shore for wedging up tight when in place. The shores should be set up in place as soon as the vessel is aground, fore and aft, on the main keel blocks, and bilge blocks should be hauled under when about one-third (roughly, varies with type of keel, etc.) the weight of the ship has been taken on main keel blocks.

Warping the Ship Into Dock.—The dock being prepared, check all measurements for the last time and flood the dock. A ship before entering dock should be, as nearly as possible, on even keel and should not have an excessive drag; 3 or 4 feet is allowable. When dock is flooded remove the caisson; have ship hauled in near the entrance to dock, and send aboard the bow or head line, one end of which is fastened, either on the ship or at the head of the dock, the other end to be hove in by winch or capstan for hauling the ship into dock. As the ship nears the dock put out bow and quarter lines, one on each side of

the ship near the bow, and one on each side near the stern for small ships, but two lines for larger ships, which are also utilized to keep her in position while pumping out the dock. The ship being inside the dock, the caisson is put back in position. Then one line at each bow and quarter is run amidships to a capstan on the dock, or breast tackles are sometimes used on smaller ships, and by heaving on these lines the ship may be controlled athwartship; fore and aft position is obtained by the head line and sometimes a hauling back line, this generally being the aftermost quarterline led well aft to a capstan. The ship is then warped into place as indicated by the bench marks and sighting battens on coping of the dock, after which the pumping of the dock is begun. Careful attention must be given the lines as the water is receding, for they must be kept at an even tension to allow for the going down of the ship, and must also hold the ship in exactly the right position until she settles on the blocks. The sighting battens and suspended plumb lines, as described above, are here used to show when the ship *is* in the right position.

For ships not having docking keels, when the ship grounds aft, presuming that she is slightly down by the stern as most ships are, and about 3 inches of the wetted surface is exposed, set up the after shores; when she grounds forward and about 3 inches of wetted surface is exposed, set up the rest of the shores, commencing aft, and draw up the bilge blocks on each side.

While the dock is being pumped out small floats are usually provided for cleaning the bottom of the ship as the water recedes.

Cleaning Bottom in Dock.—Article 2703, paragraph 2, Naval Instructions: "When a vessel is docked, the bottom shall be thoroughly cleaned and all blistered paint scraped, but no paint of any kind which adheres firmly and affords protection is to be removed; unless specific instructions from the Bureau of Construction and Repair have been received to that effect.

Under exceptional circumstances only, to be specifically stated, shall red lead or a mixture of red lead and white zinc be used, and in such cases the bottom shall be carefully prepared and ample time allowed for the paint to dry thoroughly."

While in dock all sea valves are overhauled, and zincs renewed. Packing in the rudder-head stuffing box is examined, and renewed if necessary. Plating of hull and rudder is examined and all under-water riveting and calking examined and defects remedied. No valves or other openings in the hull below the water-line are to be left open over night while in dock.

When the ship is ready to be undocked, all sea valves are closed and men stationed by them until the ship is afloat, to watch for defects; should any leaks appear, it should be reported at once so that, if necessary, the flooding of the dock may be discontinued, the water pumped down and defects made good.

While a ship is in dock, in order to guard against altering her stability, no considerable change should be made in the distribution or amount of weight on board, such as taking off or putting on large quantities of coal or water, or shifting ammunition, coal or water from one space to another; and no such change should be made without the knowledge of the construction officer responsible for the ship while in dock.

Undocking.—When the ship is ready to be undocked, all loose material that will float, such as staging, etc., should be either removed from the dock or well secured, to prevent its floating around while the dock is being flooded. A floating object will sometimes lodge under the flat of the bottom of a ship when the dock is being flooded, where it will remain after the ship is afloat, being held there by the pressure of the water; such pieces are usually dislodged when the ship gets under way at a sufficient speed.

All work having been completed and the dock cleared, men are stationed at all valves as directed in paragraph above, and

the flooding of the dock is begun. When the ship is about to float men are stationed at the lines, which are distributed and manipulated much in the same manner as described in Warping the Ship In, except that the breast tackles are not now required, the ship being controlled by the bow and quarter lines. When the dock is filled the caisson is removed, and the ship hauled out, either by a tow line to a tug or by a back hauling line from the stern, through a snatch block located well outside the entrance of the dock, and to a capstan.

THE CAISSON.

A caisson is provided with a ballast tank, which is filled when it is required to sink the caisson into place at the entrance of the dock, and is pumped out with pumps located on the caisson, when required to float it in or out of place. The ballast should never be pumped out of the caisson until the water is the same level on both sides, or in other words, until the pressure on the side of the caisson, outside of the dock, is relieved: if this precaution is not observed, the caisson is liable to jump just before the dock is completely flooded, which is likely to tear away, or otherwise injure the rubber gasket around the edges of the caisson.

Trimming tanks are fitted, which may be filled or emptied as required, to keep the caisson on even trim at each end.

There are flooding pipes through the caisson, with controlling valves on the inside, for flooding the dock.

To flood the dock, make sure of sufficient ballast in the caisson to prevent jumping, the flooding valves are then opened, admitting water to the dock; when the water reaches the same level inside as it is outside the dock, the ballast tanks of the caisson are pumped out till it floats.

The caisson is then hauled out of the way, the ship is hauled in or out of the dock, as the case may be, the caisson is floated back in place, the ballast tank valves opened and the tank

allowed to fill till the caisson sinks down on the sill in its proper place; meantime the flooding valves have been closed. The caisson being in place, the dock pumps are started and the dock pumped out.

MAKING REPAIRS BELOW THE WATER-LINE BY USE OF A COFFERDAM.

When the hull of a ship is pierced below the water-line, and when it is not practicable to place her in dry-dock, the damage may sometimes be repaired by building a cofferdam as follows: Ascertain first from plans of the ship or from actual measurements taken by a diver with wooden battens, if the plates be very much distorted, the exact shape of the hull around the injured place up to the water-line; build a huge wooden box with one open side conforming to this shape, the upper end being left open also, and extending sufficiently above the water-line to suit conditions of tide or other considerations. This forms a cofferdam, and should be of sufficient size to extend well clear of the hole and project far enough from the ship to allow space for workmen to make the necessary repairs.

This box should be strongly built and well braced; all seams should be calked tight with oakum or cotton, and the seams also covered outside with heavy canvas, well soaked in paint before applying, to prevent leaks.

The edges of the box sides which are to lay against the side of the ship, should be padded with canvas and oakum, so that when pressure comes against the cofferdam, these edges will press into small uneven places and prevent leaks.

The cofferdam when completed is weighted and lowered into place, where it is held by hogging lines or other suitable tackle, until the pumps are started and have removed enough water from the flooded compartment to cause a pressure from the outside, which will soon occur if the cofferdam fits well, and will hold it firmly in place. It is considered advisable to get some fastening to the ship, if possible, whereby bolts may be used to draw the cofferdam tightly in place before pumping

out. This may be done by hook bolts catching some broken edge of plating or by drilling holes through plating by a diver and inserting toggle bolts. If small leaks still show up when cofferdam is freed of water, the use of sawdust on the outside of the cofferdam will greatly reduce the leaks, as it will be drawn into the crevices by the water pressure and, packing there, will swell tight.

ON READING PLANS AND DRAWINGS.

To read plans, first the title and legend, which is in the lower right-hand corner, should be carefully read to ascertain if the plan is the one required. Note the scale, which is the relative size of the plan to the finished work; the scale is given so that a measurement may be taken on any part of the plan where dimensions are not shown. For example, if the scale is 3 inches to 1 foot, a measurement of 3 inches on the plan would represent 1 foot on the finished work, $1\frac{1}{2}$ inches would be equal to 6 inches, $\frac{3}{4}$ inch to 3 inches, $\frac{1}{4}$ inch to 1 inch, etc.

Plans are usually made showing three views of the object, namely: Plan view, which is a view looking down on the object; side elevation, a view of one side, and end elevation, a view of one end. Objects having arrangements which differ very materially on the opposite sides, sometimes require views of both sides or ends.

When a view of one side only is shown, any projection or other arrangement on the opposite side, or passing through, which cannot be seen from this view, is outlined by dotted lines.

Details of smaller parts are sometimes necessary, and are usually made on a larger scale in order to show them more clearly. Sections are views made at certain places showing how the object would look if cut through and separated at the place designated. For example, a plan showing the longitudinal section of a ship, is what would be seen if the vessel were split down the center from stem to stern through the center of the keel.

Transverse or cross sections are shown at the different frames and indicate what would be seen if the ship were cut athwartships at these frames.

The largest of the cross-sections, or rather the widest at the water-lines, situated generally at or near the middle length of the ship, is called the midship section or dead flat, and is marked with the symbol ⋈ on the plans.

A deck plan is a view looking down on the deck.

Sections of various parts are sometimes shown, to indicate by hatching of what material the parts are to be made. The standard hatching used in the U. S. Navy is shown in Fig. 23. The different metals are also sometimes indicated by symbols, a list of which is as follows:

U. S. NAVY STANDARD SYMBOLS FOR METALS.

Symbol.	Name of Metal.	Symbol.	Name of Metal.
A	Admiralty metal.	*N*	Naval brass.
Al	Aluminum.	*Ni*	Nickel.
Al-Z	Aluminum zinc.	*P*	Phosphor bronze.
Al-B	Aluminum bronze.	*Pb*	Lead.
B	Commercial brass.	*S or X-b*	Yellow or scrap brass.
B-M	Bell metal.	*Sb*	Antimony.
Cu	Copper.	*S-c*	Screw pipe fittings, brass.
D	Muntz metal.	*So*	Solder.
F	Brazing metal.	*Sn*	Tin.
Fe-Si	Ferro silicon.	*T*	Tobin bronze.
Fe-Mn	Ferro manganese.	*W*	Antifriction metal.
G	Gun bronze.	*W-M*	White metal.
G-AG	German silver.	*W-B*	Babbitt metals.
H	Journal bronze.	*X*	Scrap metals.
M	Valve bronze.	*Y*	Special metals.
Mg	Magnesium.	*Zn*	Zinc.
Mn	Manganese bronze.		
No	Monel metal.		

To indicate whether metal is cast or rolled, the symbol is followed by *c* for cast and *r* for rolled, as *N-c* indicates cast naval brass, *N-r* rolled naval brass.

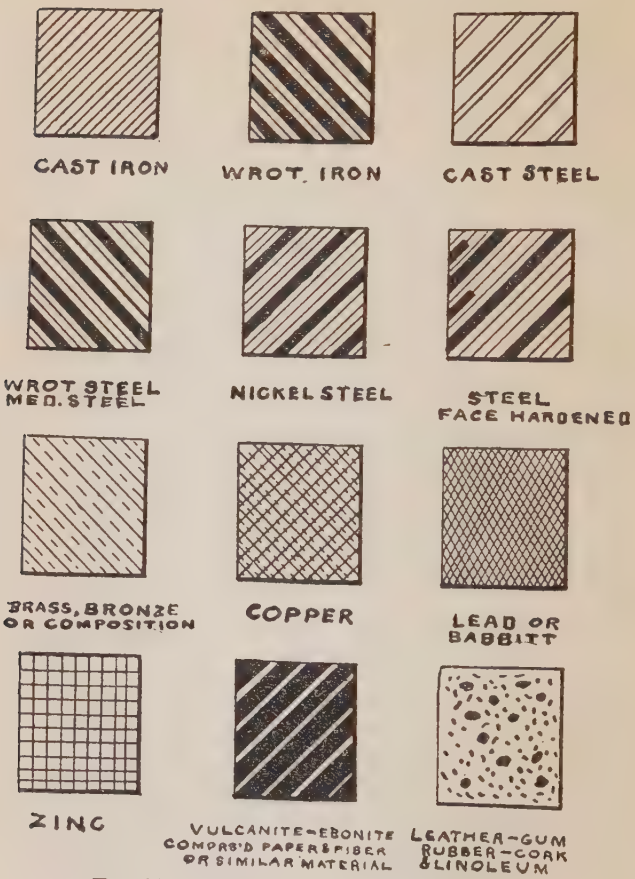

FIG. 23.—U. S. Navy Standard Hatching.

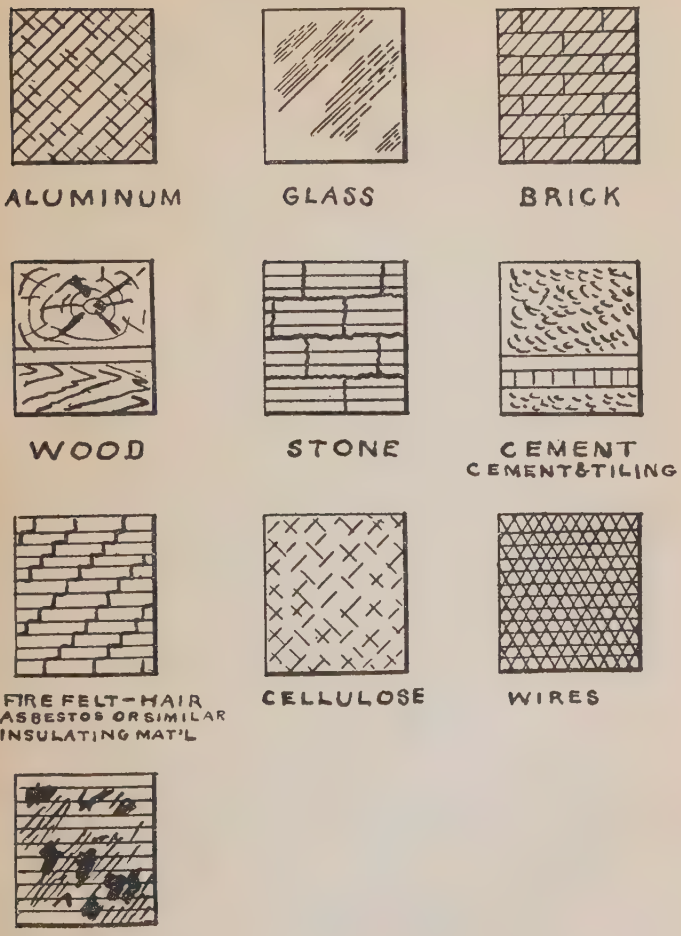

Fig. 23.—U. S. Navy Standard Hatching.

CORK RING LIFE BUOYS.

General.—To be made of high-grade material, of good workmanship, and be free from defects and blemishes which may affect the serviceability or appearance of the buoy.

Quality of Cork.—To be made of first-class, solid, buoyant cork, free from serious imperfections and outside bark.

Construction of Body.—The cork body shall be made up in three layers, four pieces to each layer, and each piece of cork to form one-quarter of a layer. Each layer shall be so mitered as to secure a maximum shift of butts. The layers and the joints to be securely glued together with a satisfactory waterproof glue.

Plan.—The cork body to be turned to the shape shown on plan incorporated in and forming part of these specifications, and be sandpapered to a smooth finish; to be reinforced with soft pine dowels, $\frac{5}{16}$ inch square, driven from the lateral surfaces, and so spaced as to securely fasten the layers of cork together and not to interfere with each other. Pins to be driven into body of buoy after buoy has been turned on lathe.

Canvas Covering.—To be covered with No. 6 flax canvas and to have four straps of double thickness of the same material 2 inches wide to hold a life line in place.

Life Line.—Life line to be made of 15-thread manila rope; to encircle the buoy and be secured to same by means of the four straps.

Table 6.—Dimensions. (See drawing on following page.)

	A Dia.	B Dia.	C Dia.	D	E	F	G Radius.	H Radius.	I Radius.	J Radius.
	In.	*In.*	*In.*	*In.*	*In.*	*In.*	*In.*	*In.*	*In.*	*In.*
18-inch.	$17\frac{5}{16}$	$9\frac{9}{16}$	$18\frac{1}{8}$	3	$3\frac{7}{8}$	$1\frac{1}{2}$	....	....	....	....
30-inch.	$29\frac{1}{4}$	$17\frac{1}{8}$	$31\frac{1}{2}$	$4\frac{7}{16}$	$6\frac{5}{16}$	$2\frac{7}{32}$	$2\frac{7}{32}$	$7\frac{9}{16}$	$3\frac{3}{8}$	$2\frac{1}{4}$

Sizes and Dimensions.—To be furnished in two sizes, as specified. The larger size to be about 30 inches outside diameter and to have not less than 48 dowel pins, 4 inches long; the

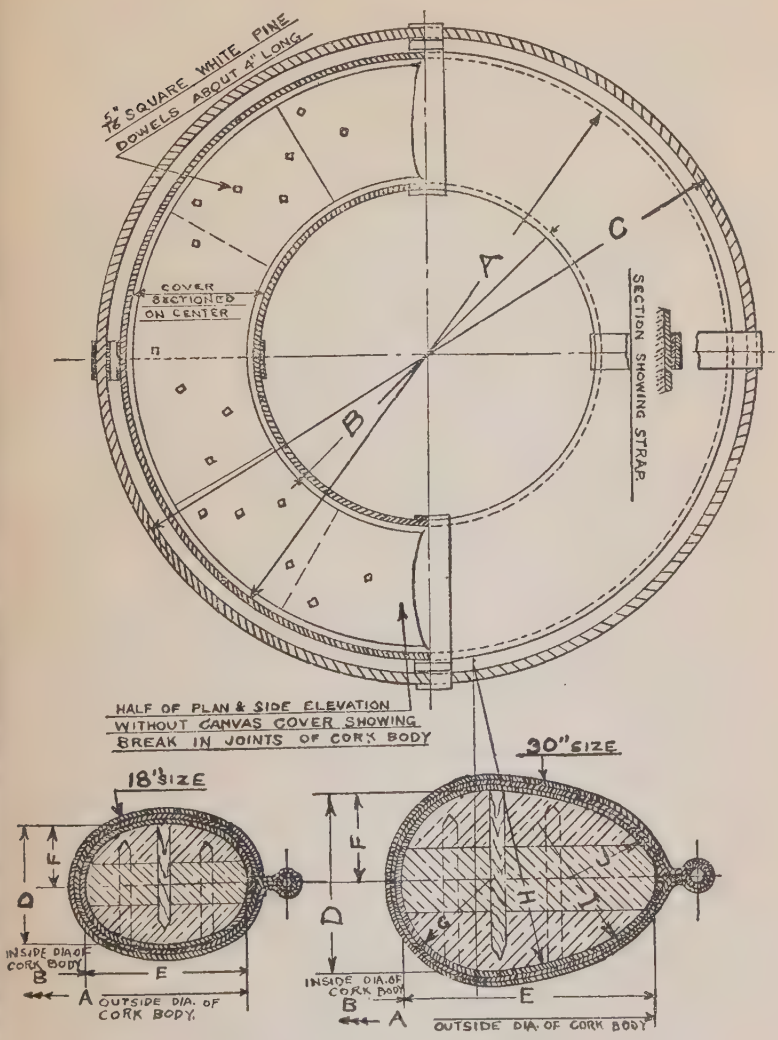

FIG. 24.—Cork Ring Life Buoy.

smaller size to be about 18 inches outside diameter and to have not less than 8 dowel pins about 2½ inches long. Weight of large size, complete, not to exceed 15 pounds; of the small size, not to exceed 3½ pounds. Both sizes to be unpainted.

COLOMÉS PATENT LEAK STOPPER.

This apparatus is composed of a steel rod, threaded on a part of its length, at the end of which is pivoted an iron bar with one end slightly heavier than the other, so that when the rod is held in a horizontal position, the heaviest end of the bar will drop down and stand in a vertical position, forming a strong-back; to this bar is fastened an oval-shaped piece of sheet iron, each side of which is covered with thick felt. A conical-shaped bag, filled with cellulose, with a hole through the center, slides over the threaded rod, and a large washer is provided, which goes on back of the bag, followed by a hand nut which engages the thread on the rod, forcing the washer hard against the bag.

These leak stoppers are made in three sizes. No. 1 being designed for holes from 1½ to 3 inches, No. 2 from 3 to 6 inches, and No. 3 from 6 to 10 inches; and are supplied to ships in hard-wood cases, each case containing one each of the three sizes, which comprises a set.

INSTRUCTIONS FOR USING COLOMÉS LEAK STOPPER.

When a leak has been located, a stopper should be selected corresponding approximately in size to that of the hole. Then holding the rod with the lighter end of the bar inboard, so that the bar and oval plate lie alongside the rod, the bar and rod are forced through, keeping the rod as near as possible to the center of the hole, the operator standing to one side to avoid the rush of water.

As soon as the bar passes far enough through, the heavier end will drop down, placing the bar across the hole outside.

The pressure against the oval piece of plate will force the bar against the side of the vessel across the opening, and resting on the plating around the hole, affords points of support, while the felt-covered plate greatly reduces the leak, making easier the next operation, which is to slip the bag, washer and nut on to the rod, and screw down the nut till the bag of cellulose is compressed against the hole. The cellulose bag being an elastic mass, conforms easily to irregularities around the edges of the hole, and the cellulose will increase greatly in volume when wet, both of which have a tendency to close the hole and lessen the leak.

The inventor of this device claims that long, jagged holes, such as rents in the outside plating, may be stopped by inserting a number of the leak stoppers side by side, which seems reasonable, provided the opening is not too wide for the bar or strongback to reach across on the outside.

STEERING ENGINES AND APPLIANCES.

Many of the latest capital ships, including battleships, battle-cruisers and scouts are fitted for steering with electro-hydraulic gear, which consists of the following equipment:

Main Hydraulic Cylinders.—Two main hydraulic plungers, each working in a pair of opposed hydraulic cylinders, have connecting rods going to the rudder crosshead. Oil is used as the working fluid, and when it is pumped into the forward port and aft starboard cylinder the rudder is moved to the right, and when pumped to the other two cylinders the rudder is moved to the left.

Hydraulic Pumps.—The oil is pumped from one side to the other of the main cylinders by two variable stroke pumps, each consisting of the A end or pump end of a size 50, type K, Waterbury hydraulic speed gear. The two pumps, which work together, are directly connected by flexible couplings to the

ends of the shaft of a 75-horsepower motor. A duplicate motor and its two pumps are provided as a reserve set, but only one motor runs at a time. A pair of three-way valves are provided in the connecting piping, so that either set may be connected to the cylinders as desired, and so that either set or both may be cut off.

The amount of oil pumped and the direction of its flow is dependent on the amount and direction of movement of the control shafts of the pair of main pumps in use. When the control shafts are in their neutral position no oil is pumped and there is no movement of the main plungers. In all cases when the control shafts are turned to their maximum position the pumps have their full stroke and pump their full capacity of oil and the maximum speed of rudder movement is obtained; and when the control shafts are turned to any other position the amount of oil pumped and the consequent rudder speed is proportional to the amount that the control shafts have been turned from their neutral position.

Piping.—The main hydraulic piping connecting the pumps to the cylinders is arranged so that the pair of pumps in use pump together in parallel, and one side is connected to the forward port and aft starboard cylinders, and the other side to the forward starboard and aft port cylinders.

Shut-off valves are provided at each cylinder so that the pair on either plunger may be cut out for repairs and the gear operated by the remaining pair.

By-pass connections are provided around each plunger so that when cut out as above the contained oil will not lock the movement.

Drain cocks are provided so that the cylinders cut out may be drained and repacked without shutting down the steering gear.

A double-acting relief valve is provided so that any excess in force put on the rudder will by-pass the oil and prevent breakage.

Pilot Motors.—In steering from the bridge or other distant station the trick-wheel shaft is turned by one of two pilot motors connected to it by spur gearing and arranged so that the pinion on the motor shaft can be slid in or out of mesh with a gear on the trick-wheel shaft. The pilot motor in use is controlled by a standard master controller of the non-follow-up type. When the lever of the master controller is turned to the right the pilot motor turns in the direction to give right rudder, and keeps turning as long as the lever is held over. When the lever is brought to the central off position the pilot motor stops. When the lever is turned to the left the pilot motor turns in the direction to give left rudder.

Follow-Up Mechanism.—Assume that the two pilot motors are both disconnected and the steering is being done by the hand trick wheel in the steering-gear compartment, then the relation between the trick wheel and the rudder is of exactly the same nature as in case of a standard steam-steering engine with a follow-up control.

The trick wheel turns the central pinion of a planetary differential gear, the large internal gear of which is connected through bevel gears to the control shaft of the main pump; and the member carrying the planetary gears is connected through bevel gears, rack and pinion to one of the main hydraulic plungers. With the rudder stationary, the member carrying the planetary gears is held stationary, and therefore when the trick wheel is moved it turns the central pinion, which turns the planetary gears on their journals, thus causing the internal gear to rotate and turn the control shaft; this causes the pump

to pump oil to the main cylinders and move the rudder. Then when the trick wheel is stopped and held still the motion of the plunger acting through the rack, pinion and bevel gears, rotates the planetary gears about the now stationary, central pinion which turns the internal gear in the reverse direction and brings the control shaft back to its neutral position, stops the pumping of the oil, and consequently the motion of the plungers and rudder.

Therefore the rudder follows in both direction and speed the motion of the trick wheel, but in starting and stopping the rudder lags the short time necessary to move the control shaft from neutral to its working position or back.

Pressure-Operated Control-Shaft Stop.—The maximum horsepower output required from the main driving motor can be much reduced by limiting the movement of the control shaft at the large rudder angles. When the rudder torque is high the oil pressure is high, and if then the volume of oil pumped is reduced the horsepower is reduced. In other words, the rudder is moved fast at low torques and slow at high torques, but the time from hard-over to hard-over kept within the required 20 seconds.

This is accomplished by having two small hydraulic control cylinders connected through a shuttle valve to opposite cylinders, so that whenever there is any pressure on the system the control plungers will be forced out, against adjustable resisting springs, and come up against a pin stop on a segment geared to the control shaft. Therefore when the pressure exceeds a predetermined amount the control shaft cannot be turned to its full-stroke position, and the higher the pressure the smaller the permitted movement.

Slip Clutch.—If the rudder should be forcibly moved by an excessive outside force, and the trick wheel held, an excessive strain would come on the control gearing. To overcome this a

slip clutch is put on the cross shaft of the follow up, which is set at sufficient torque to easily turn the control shaft of the pumps, but to slip before any part is damaged. It is arranged so that it can be disengaged when the hand or auxiliary gear is used.

Hand gear and auxiliary drives are located in a separate water-tight compartment and consist of a hydraulic pump of the same size and construction as those used for the power drive, arranged to be driven through clutches by any one of three methods:

1. By handwheels.

2. By a 7½-horsepower auxiliary electric motor, 600 revolutions per minute, 80 volts (storage battery).

3. By a 5-horsepower, compressed-air motor, working on 150-pound gas-ejecting system.

The hand-gear pump is connected by separate small pipes to the main cylinders in the same manner as the main power pumps and is geared by a chain drive to the handwheels, with a ratio of 2 revolutions of the pump to 1 revolution of the handwheels, which gives a ratio of 73 turns of the handwheels from hard-over to hard-over when the control shaft of the pump is set at full-stroke position. Any higher ratio desired may be obtained by setting the control shaft at less than full stroke.

When steering by the handwheels the control shaft of the pump is set permanently at the position giving the most suitable ratio. The reversal of the handwheels reverses the direction of turning of the pump and consequently reverses the direction of flow of the oil with the control shaft remaining in the set position. This gives hand steering in the usual manner.

Auxiliary Electric and Air Motors.—When the motors are used they drive the pump continuously, and the movement of the rudder is controlled by turning a hand lever on the control shaft of the pump.

Steering Master Controllers (at bridge conning-tower, central station and steering room).—The master controllers are of the drum type, pedestal mounted, and waterproof. The steering lever has three positions—*off, right rudder* and *left rudder*. The lever automatically returns to the *off* position when released. Each master has a signal lamp mounted behind a glass window which remains lighted as long as the control circuit is energized and that particular station is designated by the position of the selective switch on the transfer panel. Only one station will be illuminated at a time.

STEAM, ELECTRIC AND HAND POWER STEERING.

Some of the later types of battleships are fitted for steering, by steam, electricity and hand power. The tiller shaft is the actuating medium through which movement is imparted to the rudder by all of the above-mentioned systems of steering except electro-hydraulic. The tiller shaft is a long, round shaft fitted fore and aft, with the after bearing just forward of the rudder head. On this shaft are chased right- and left-hand screw threads, one just ahead of the other, on these threads work the driving nuts which are connected to the tiller yoke on the rudder head by connecting rods. When the tiller shaft is turned, these driving nuts move in opposite directions, thus imparting the required movement to the rudder.

For steering by hand, large hand-steering wheels are fitted to a smaller shaft connected by clutch and gears to the tiller shaft. When steering by hand all power machinery is disconnected by unclutching, the hand gear is connected by clutch, and the hand wheels are manned by as many men as may be necessary.

For steering by electricity the tiller shaft is driven by one or two motors, located beside the tiller shaft, and connected, for

driving it, by pinion and gear; current is furnished to these motors by a motor generator, or from the main power busses; the motors are reversible and are operated by controllers located on the bridge, in chart house, conning-tower, central station and steering room.

The motors are fitted with magnetic brakes which are automatically thrown on when the current is shut off. The controllers are so arranged that when the pointer is on zero all current is cut off from the motors, and the brakes are thrown on; when it is desired to move the rudder, the controller is moved to right or left as required, the motors begin to turn, moving the rudder in the desired direction; when the rudder is as far over as desired the controller handle is brought back to zero, this cuts off the current and puts on the brakes, stopping the motors immediately; the rudder remains in this position till moved again; by throwing the controller handle in the other direction, the rudder is brought back as may be required.

There is a limit switch, operated automatically by the tiller shaft, which cuts off the current from the control circuit and stops the motors when the rudder reaches an angle of 35 degrees, and prevents the rudder from jamming hard over; this, however, does not prevent the motors from being operated in reverse direction by the controllers, which, if thrown in opposite direction, will start the motors and bring the rudder back toward the midship position.

There are indicators at each control or steering station, electrically operated by the movements of the tiller shaft or rudder head, which show the angle of the rudder at all times

For steering by steam, a two-cylinder engine is used, connected to the tiller shaft with suitable gears and clutch for disconnecting; the engine is fitted with a differential reversing

valve, having an automatic controlling gear connected to the tiller shaft. This reversing valve is operated by steering wheels, located on the bridge and at other steering stations, connection being made by shafts and gearing, and wire rope leading over drums. There is an automatic attachment on this reversing valve which functions in such way that the engine runs only while the valve is being moved in one direction; when this valve is stopped the automatic attachment follows up, closes the valve, and stops the engine, holding the rudder at the angle to which it had been carried; by this method, the rudder follows every movement of the steering wheel; when the wheel is turned to right the rudder follows to right, when the wheel is turned to left the rudder follows to left, when the wheel is stopped, the rudder stops and remains so until the wheel is moved again.

One of the principal difficulties with the steam-steering apparatus is the occurrence of lost motion between the reversing valve and the steering wheels on the bridge, or at a great distance, where transmission of movement to the valve is by wire rope from the steering wheels. This is due to the unavoidable stretch and sag of the wire rope. The wire rope will stretch so much, it will at times, run off of the sheaves and drums.

This lost motion, of course, causes a correspondingly unnecessary movement of the steering wheel each time it is desired to move the rudder. Failure of the rudder to respond immediately to any movement of the steering wheel is obviously undesirable, especially when the ship is being maneuvered in close places, where delay, of even one second, in changing course may result in damage or disaster. If the wire ropes jump from the sheaves or drums it is out of action entirely, necessitating the use of some other method of operating the reversing valve; there is a steering wheel at the valve, in the steering engine compartment, which is used in emergencies,

instructions to the steersman being transmitted from the bridge by voice tube.

The rope connection between steering wheels and reversing valve, with its difficulties of lost motion, has been replaced with a more reliable and positive method of transmission, called the *telemotor*. With the telemotor, motion is transmitted from the steering wheel to the differential reversing valve, on the steering engine, by hydraulic pressure.

TELEMOTORS.

A telemotor, manufactured by the American Engineering Co., of Philadelphia, Pa., is described here as follows: This telemotor consists of two hydraulic cylinders, or rams of the plunger type, at the steering wheel, their plungers being operated by a rack on the plungers and a pinion on the steering wheel; there are also two hydraulic cylinders or rams, in tandem, located at the steering engine, having their plungers or rams connected to the differential reversing valve, the reversing valve being connected to the plungers between the cylinders. To avoid confusion, these cylinders will be designated as "A" and "B." The "A" cylinder at the steering wheel has direct pipe connection with the "A" cylinder at the reversing valve, there is a similar pipe connection between the "B" cylinders of these stations; from a filling tank, all of these cylinders and their connecting pipes are filled with liquid (water and glycerine, or a special oil furnished by the makers), thus forming two hydraulic connections between the steering wheel and the differential reversing valve (one between "A" cylinder and one between "B" cylinder); the rudder being amidships and the steering wheel in central position, the four plungers are in the central position of travel in the cylinders: Assume that the steering wheel is turned to the right, this movement forces *in* the plunger of the "A" cylinder at the steering wheel, withdraws the plunger of the "B" cylinder at steering wheel,

and the hydraulic pressure transmits a corresponding movement to the plungers attached to the reversing valve, moving this valve of the steering engine either way as may be required. In other words the reversing valve of the steering engine is actuated between two hydraulic cylinders, or rams working in unison, so that any movement of the steering wheel applies pressure to one cylinder and relieves pressure on the other at the same time. In order to obtain positive action of the reversing valve, without lost motion, it is essential to eliminate all air from the system, and have it completely filled with the liquid at all times.

The Brown telemotor is another type, while slightly different in arrangement, it works on the same general principle as the one described above. The Brown telemotor has only one cylinder instead of two, as the American; this cylinder is longer and has a piston head traveling from the center, in each direction toward the ends, having the hydraulic pressure on each side of the piston. The same principles are involved, however, and the same results accomplished, attended, of course, by practically the same difficulties to be avoided, and the same precautions to be taken for eliminating air, preventing leaks, etc., as with the American type described above. The "American" telemotor has hydraulic rams of the plunger type, *i. e.*, with outside packed plunger and therefore no pistons. The "Brown" telemotor has pistons, and hence internal piston packing where leakage past the piston is not visible.

The automatic control gear, connected to the tiller shaft, operates in the same way, for controlling the reversing valve, when using the telemotor as with the wire rope method of transmission. While the steering wheel is being moved the hydraulic pressure continues moving the differential reversing valve, when the wheel is stopped the valve stops, and the automatic attachment follows up, closes the valve, and stops the

engine, holding the rudder at the angle to which it has been carried.

The following are extracts from data, published by the Bureau of Construction and Repair, on the subject of "Hydraulic Telemotors for Steam Steering"; this data reveals many of the troubles to be expected with these machines and how to remedy them, also other matters of interest:

The American Telemotor.—The more recent "American" telemotor is of the self-centering type. This has centering springs at the after telemotor similar to the "Brown" telemotor. Each of the two cylinders of the forward telemotor has an automatic by-pass valve, both of which are opened simultaneously by a cam when the pistons are at mid-stroke (*i. e.,* wheel amidships), and thus cross connects the two cylinders. At this instant the springs of the after telemotor bring the after telemotor to mid-stroke and thus keep the forward and after telemotor in step. With leaky by-pass valves (and other causes also), it is easily conceivable that the after telemotor may be amidships, or nearly so, and that the wheel on the bridge has been gradually worked hard-over. In this condition, bringing the wheel amidships quickly to get back in step, puts the rudder hard-over which is not wanted and which may be dangerous—and a means for by-passing at will and *at the wheel* still seems necessary and the loop by-pass at the wheel again presents itself as the solution.

Filling Pump.—The filling pump should be of ample capacity and power to permit giving the liquid considerable velocity through the pipe lines in order to entrain as much air as possible. Also the pump should be piped so that the liquid can be circulated both ways. On the *New York* this proved the only means to get the air out—after days of trial had been made of all other means known of.

Pipe Leads.—Of course pipes should be led so as to avoid the formation of air pockets. However, all air pockets can

not be avoided. The presence of air in the system prevents synchronous movements between the forward and after plunger. This may be for movements in one direction only or it may be in both directions, depending on the distribution of the air on the two sides.

With air on the pressure side, the after plunger will not respond immediately, and it may, and generally will, move unevenly, and by jumps, causing racing of the steering engine.

In filling the system, it is not easy to get the air out of the system. This depends on a number of things, such as size of pipe, lead of pipe, size of pump, and character or quality of pump; speed of pumping; length of time that liquid is circulated; proper disposition and use of air-cocks in cylinders, valve body, etc.

In a system containing air, the air may be distributed unevenly on the two sides so that the control of starboard and port rudder is unequal.

With considerable air present, there may be good response in one direction with minor or no response in the other direction; or, there may be minor or no response in either direction.

Operation.—Air in system: It may be asked, where does the air come from?

(a) Systems not full originally.

(b) Reciprocating plungers drag a minute quantity, especially if not very smooth.

(c) If system leaks, the suction stroke can take air through leak.

(d) If the supply tank at forward telemotor is empty, it will feed air instead of liquid.

(e) Release of air contained in water.

(f) If temperature is high enough, steam may be generated.

NOTE.—**The relief valve will prevent excessive pressure.**

Convenient Test.—Block after telemotor and try to turn forward wheel. If the forward wheel can be moved there is

air, loss of liquid, or leaky by-pass. To remove the air, go through the regular routine of filling the system. Loss of liquid and leaky by-pass is referred to below.

Leaky System, Self-Centering Type.—If in a good working system a considerable leak develops on the pressure side as the wheel is put over—say starboard wheel—the rudder will not move if all the liquid displaced by the forward piston leaks out. If the rudder has responded partly it will come back amidships by the action of the centering springs—so that the wheel shows starboard rudder, whereas in fact the rudder is amidships.

The vacuum formed on the suction side of the piston will fill from the tank.

As soon as the wheel is started back amidships the rudder begins to go to port. When the wheel reaches 0 the centering springs bring the port rudder to amidships. But if the wheel is carried rapidly past the by-pass just a little the rudder remains to port—and further movements of the wheel to port carry the rudder more to port until it is hard-over.

If such a leak is small, some steering on each side is possible at first, but the forward piston will work off center and the supply tank is constantly called on for liquid. The off-center condition destroys possibility of full angle on each side. When the drain tank is empty and air is taken in, air troubles and leak troubles are both present. The off-center condition forces wabbly steering when the wheel is brought back to zero. With the non-centering type of telemotor the following obtains:

If in a good and working system a considerable leak develops on the pressure side as the wheel is put over—say starboard wheel—the rudder will not move at all if all the liquid displaced by the forward piston leaks out. If only part of the liquid has leaked out, there will be partial response. The vacuum formed on the suction side of the piston will fill from the tank. It is easily seen that the wheel may be worked hard-over and the rudder have only gotten to a few degrees. Bring-

ing the wheel back to zero puts the rudder practically hard to port and it may stay there if the leakage is serious enough. Manifestly a leaky system is dangerous to the proper control of the rudder.

Excessive Heat.—If the whole or part of the system is subject to excessive heat, trouble of the order of what was heretofore described will develop by creating vapor in the system, also leaks if no relief valves are fitted.

It is apparent, therefore, that no part of the system should be subjected to excessive heat. Piping through hot spaces should be heavily lagged.

Control Valve of Steering Engine Sticking.—In this connection it must be constantly borne in mind, that when the steering engine is once started by opening the control valve it will keep on running and produce rudder movement until the valve is again shut off or until the engine jams at hard-over; also the follow-up gear of the steering engine constantly tends to shut off this valve; also the telemotor system is for the purpose of opening this valve.

It must be also remembered that when the bridge wheel is amidships the two forward telemotor cylinders are by-passed, *i. e.,* connected with each other through the by-pass valves, hence, in this position the forward telemotor does not control the after telemotor.

The control valve is operated by a floating lever with three attachments, one to the valve, one to the follow-up gear, and the third to the after telemotor.

In ordinary steering, the wheel is given one or two spokes on each side of amidships. Suppose the control valve to have been opened and the wheel brought back to amidships before the valve closes. Then suppose that the control valve sticks. The engine is running and the follow-up gear tries to close the valve, but it sticks, hence the third connection to the floating lever must move, viz., the after telemotor. There is

nothing to prevent its moving except its centering springs which offer comparatively little resistance; besides the force of the steering engine is at work to compress them.

Thus the engine keeps on running and putting the rudder over with the wheel on the bridge amidships.

This actually happened on the *Imperator* in mid-Atlantic. The rudder went hard-over and she made a complete circle.

If the valve ceases to stick, the after telemotor springs bring the rudder back amidships—still without moving the wheel on the bridge.

If the valve continues to stick the engine will jam the rudder against its hard-over stop, or before this happens, the floating lever or one of its connections may carry away.

If the valve sticks when the bridge wheel is not amidships the man at the wheel will feel his wheel taking charge and if it sticks hard enough he will probably not be able to hold the wheel.

Empty Supply Tank.—When the tank at the bridge stand is empty, it supplies air through the supply (or suction) valve instead of liquid and troubles due to air are present.

The supply of liquid in this tank must be carefully watched.

The valve under the tank must be kept open.

The tank should have a gage glass.

The liquid should be carefully strained and *every effort must be made not to get dirt or grit into the pipes* as they affect the operation of the supply valve, the relief valve, etc.

Loop By-Pass Valve.—The loop to the steering stand on bridge and in conning-tower has only recently been called for by the bureau (May, 1917). The valve must be of good design and tight. The loop applies to both the non-centering and the self-centering type of telemotor. The loop is provided with a suction valve and supply tank.

Suction (or Supply) Valves and Relief Valves at Forward Telemotor.—The supply valves must not be set up too tightly

as otherwise they will not supply liquid during the suction stroke of the telemotor plunger.

The relief valves of the non-centering type of telemotor on the other hand should not be set up too lightly. They should not unseat under ordinary operation of the telemotor. The relief valve is primarily for the purpose of taking care of expansion of the liquid. One of the functions of the supply valve is to take care of contraction of the liquid.

Self-Centering Type.—In this type the by-pass valves have the pressure on top so that the chance of their leaking is less. The cam gear must be kept in good working order, and when not in use the wheel *must* be kept amidships so that the valves are open and thus permit expansion and contraction of the liquid. The valve in the connection to the supply tank must also, of course, remain open.

Emergency Centering (or By-Pass) Valve at Forward Telemotor and at Bridge Stand.—As the name indicates, it is to be used only for getting the forward and after telemotor into step. For the bridge steering stand, the by-pass valve in the loop is the emergency centering valve. When operating from central station, the by-pass on the stand of the non-centering type of telemotor is the emergency centering valve. For the self-centering type the by-pass valves have to be pushed by hand if the wheel cannot, for any reason, be brought back to amidships.

It is essential to have this centering (or by-pass) valve, or valves, absolutely tight to avoid lost motion and poor performance.

Wheel Works too Hard.—In a system which has worked properly this may be due to several causes, such as:

(a) Stiffness in transmission shafting, or in steering stand and forward telemotor mechanism. Cases have been known where a wheel could only be moved with great effort. Examination showed that the shaft bearing of the wheel (which is right under the eyes of the helmsman) had never been oiled.

(b) Telemotor plungers stuffing boxes set up too tight or improper packing used.

(c) Telemotor plungers too tight. This is not usual trouble.

(d) Centering springs of after telemotor too stiff or too tightly set up.

(e) Control valve working hard.

(f) Link and shafting connection between after telemotor and control valve stiff.

In general, the telemotor system of control is excellent when in proper working order, and there is at present no known substitute of equal efficiency for long transmission.

In a normal system, properly installed, comparatively little, but intelligent, supervision should keep it in efficient and safe working order.

It may be interesting to diagnose some typical troubles. Some such cases are given below:

(A) Helmsman Puts Wheel Over (say port) and she *does not* "catch"; turns back to center once or twice and she "catches."

(a) Evidently not a leak in system as she catches.

(b) Air in system can account for it as pressure side compresses the air and suction side draws liquid from tank, thus building up the pressure until response results. Response would probably be sluggish.

(B) Rudder Going Hard-Over with the Bridge Wheel Amidships.—This has been referred to above under sticking control valve.

(C) Wabbling on a Course (self-centering type of telemotor).—Probably due to leaky by-pass. Assume you need *starboard* rudder. Turn wheel and ship starts, but rudder returns to 0°. Told more wheel and same result. Bridge telemotor piston is working toward end of stroke. If attempt now is made to equalize by bringing bridge to 0°, the rudder goes to port until bridge gets to 0° when port rudder returns to 0° rudder.

(D) Sluggish Response and After Telemotor Going by Jumps Causing Racing of Steering Engine.—The primary cause is probably air in the system with possible stiffness in the after telemotor due to stuffing boxes being too tight. Stiffness aft may also be in the control valve.

If high temperatures are present, vapor may be formed in the system, thus producing the same effect as air.

(E) Rudder Will Not Stay Over (self-centering type of telemotor).—It is practically certain that a leaky by-pass is the cause; otherwise a leaky pipe or a leaky emergency valve in the loop on the bridge.

(F) Wheel Responds One Way, But Not the Other.—Probably a leak on one side. May also be excessive air on one side.

Always consider the question of high temperature in such cases. Where such trouble has existed without apparent explanation it has been found that telemotor piping ran parallel with, and close to, steam piping, or over boilers; or after telemotor is subject to excessive heat.

In this connection, inquire if the system worked better when first getting under way, if the liquid got hot, etc.

(G) Rudder at 0°, Wheel Starboard, Order for Starboard Rudder is Given (self-centering type of telemotor).—If the wheel is brought to 0° to permit centering, the rudder will have been put port. If this is not permissible owing to narrow channel, etc., the only recourse is to use the emergency centering valve. With the non-centering type, the by-pass valve has to be used.

Tests.—In proceeding to investigate and overhaul a telemotor system the following are some of the more important considerations and tests:

(a) *Heat.*—Determine whether heat is probable cause of trouble by following the entire lead of the telemotor piping; the location of the after telemotor; making inquiry on board as to troubles experienced, etc.

Hot telemotor piping can probably be improved by lagging heavily.

If the after telemotor is in hot space and it is not water-jacketed, change in location to a cool place is probably the only cure.

(b) *For Each Steering Stand* (test for freedom of gearings, etc.).—Open emergency or by-pass valve and work wheel back and forth—it should work very easily as no work is being done.

(c) *For Each Telemotor Aft* (test for freedom of bearings, etc.). (Self-centering type of telemotor.)—Put hard-over by forward wheel and open the emergency valve. The after centering springs should center the after telemotor easily and quickly. Do this both directions.

If not working well, search for the trouble—probably one or more of the following: Stuffing boxes of plungers too tight; centering springs broken, too weak or not set up; transmission to control valve stiff; control valve sticks.

(d) *Pressure Test* (tightness of system).—Put system under 300 to 500-pound pressure with emergency or by-pass valve at stand open; supply tank valve *open;* manifold valves open. (Note.—Some ships have no manifold.) A ready means for applying pressure is to block the after telemotor and use the wheel at the forward telemotor with by-pass closed. Reversing the wheel puts the other side under pressure.

If the system does not hold the pressure—hunt for the leaks.

If a suction or relief valve leaks, it can be detected by the level of the liquid in the supply tank rising.

Pipe connection leaks; stuffing box leaks; bonnet leaks; screw plug leaks, etc.; are external and can be found by inspection.

(e) *Test for By-Pass, Suction and Relief Valve Leakage* (self-centering type).—Hold the wheel starboard and port and observe the after telemotor. If it does not stay over leakage exists. This may be in the system through leaky connections, etc., or it may be the by-pass valves.

(Non-centering type.)—Block the after telemotor and work the wheel. If no movement is possible, the system is full and the valves tight. Air and leaky system will permit movement. These are referred to elsewhere.

Leak between the two forward cylinders through by-pass or relief valves can probably be spotted by closing the cut-out valve usually fitted between the valves. If no such cut-out valve is fitted, it seems necessary to fit some. In the case of the *Nevada* it appears that when the suction and relief valves were fitted by the shipbuilder, no such valve was fitted. With the self-centering type, the cut-out valve between the two automatic by-pass valves is a desirable fitting. In difficult cases it may be necessary to disconnect piping to determine leakage.

(f) *Test for Manifold Valves.*—Disconnect pipe on one side of each valve and put other side under pressure, using the steering wheel.

Test of Centering Springs (self-centering type of telemotor).—Put the wheel to starboard and port and open emergency valve. The after telemotor should center quickly.

If sluggish, examine the transmission aft, also work the control valve up and down to see if it works freely.

If these are all right the centering springs probably need examination and tightening. In this connection it must be remembered that stiffer centering springs mean harder work at the wheel to compress them.

Consideration of the above makes it plain that a reliable rudder indicator direct from the rudder head is very important.

Transmission shafting from bridge stands to telemotor in central station. The design of bearings, and their location and support, also size of shafting, etc., cannot be given too much consideration. There are many examples where such transmission works easily when not under load, but works stiffly when under load, due to bearings yielding, shafting binding

and other causes. A liberal use of properly designed flexible couplings (free of lost motion) will also be a great help.

Effect of Leaky Piston or Pistons (the Brown telemotor).—Prevents unison between forward and after pistons.

After piston lags behind. This may be in one direction only, as each side has its own cup leather.

Test for this is to lash wheel *starboard and port* and see whether after piston remains over. If the system is tight otherwise, this is conclusive.

With bad piston leakage *both* ways, there is only minor, or no response of rudder in either direction.

With bad piston leakage *one* way, there is minor, or no response in one way, and full response the other way. This full response may become very serious, as follows:

The wheel will find itself hard-over, say starboard, with the rudder amidships.

If, now, the wheel is brought back to amidships, the rudder will go hard port and start to come back as soon as the wheel gets amidships and the piston by-passes. If the wheel is stopped before the piston reaches the by-pass, or if it is carried a small amount beyond 0°, so that the pressure leather overruns the by-pass and seals it again, the rudder is held hard aport while the wheel indicates amidships or 0°.

Note.—The by-pass holes are very small—only about $\frac{1}{8}$-inch—so that they can easily be overrun and sealed, and without the man at the wheel being aware of it.

Thus, in this condition, zero degrees on the wheel indicator may mean rudder hard aport or rudder amidships; starboard rudder is not obtainable, port rudder may be obtained by port movement of wheel at any time at any point of the scale from 35° starboard *over* 35° port—in other words—all *left* or port movements of the wheel give port rudder, and all *right* or starboard movements have no effect. Further, if the wheel is moved from hard *starboard* to hard *port* with sufficient stop at 0° to permit by-pass to work, the rudder will have gone hard

aport, then will have come back to zero and gone again hard aport and is held there as long as the wheel is hard aport.

The indicator at the wheel will be misleading and all starboard rudder angles will be wrong both in direction and amount. The port indications may also be erroneous.

NOTE.—With less serious leakage on one side the results are of the same order, but less pronounced.

With less serious leakage both ways, the above troubles are encountered in both directions, but generally less pronounced, depending on amount of leakage and manner of operating.

With pronounced leakage both sides, there will, of course, be practically no response by the rudder.

It is, therefore, apparent that both leathers of both the forward and after telemotors *must be tight* for efficient and reliable control of the rudder.

Under certain possible conditions of operation liquid flows past the forward telemotor leathers in the direction to unseat one leather.

Air in the System.—It may be asked where does the air come from?

(a) Systems not full originally.

(b) Reciprocating piston rods drag a minute quantity, especially if not very smooth.

(c) If the system leaks, the suction stroke can take air through leak.

(d) If the supply tank at forward telemotor is empty it will feed air instead of liquid.

(e) Release of air contained in water by high temperature.

(f) If temperature is high enough steam may be generated.

NOTE.—The relief valves will prevent excessive pressure.

The presence of air in the system prevents synchronous movements between the forward and after piston. This may be for movements in one direction only or it may be in both directions, depending on the distribution of the air in the system.

With air on the pressure side, the after piston will not respond immediately, and it may, and generally will, move unevenly, and by jumps, causing racing of the steering engine.

In filling the system, it is not easy to get the air out of the system. This depends on a number of things, such as, size of pipe, lead of pipe, size of pump, and character or quality of pump; speed of pumping, length of time that liquid is circulated; proper distribution and use of air-cocks in cylinders, valve body, etc.

In a system containing air, the air may be distributed unevenly on the two sides so that the control of starboard and port rudder is unequal. In a normal installation containing air, the control of the rudder may be expected to be better for the down stroke than for the upstroke as the air may be expected to collect in the top of the bridge telemotor cylinder.

With considerable air present, there may be good response in one direction with minor or no response in the other direction; or, there may be minor or no response in either direction.

Convenient Test.—Block after telemotor and try to turn forward wheel. If the forward wheel can be moved there is air, piston leakage or loss of liquid.

Unblock after telemotor and lash wheel first starboard and then port. If there is piston leakage the after telemotor will center itself.

Note.—Piston leakage may be in one direction only, or it may be in both directions. Loss of liquid will show itself in the same way, and it remains to find which it is. It is clear that it is more or less of a difficult and tedious job.

Test for Air in System.—With system, pistons, valves, etc., tight as above, and the piping filled, close the valves at the after telemotor (or block the telemotor), and work the forward wheel. If it can be worked air must be in the system as all other causes (leakage of system, piston leakage, etc.) have been previously eliminated.

Go through the routine of pumping and opening air plugs as before until the air is all out.

Should this be impossible study the size and lead of pipes, also the size of pump and pump connections, remembering that *air stays on top* and that the air in the piping can only be removed in many parts by being swept along and even downward by the liquid. This leads to the conclusions that if the pockets of air exist where the liquid cannot sweep it out, air-cocks must be provided or other changes made; also that speed of flow of the liquid is very important, hence the pumping should be done vigorously and maintained for a considerable time.

On one ship where the case seemed hopeless, the pump was piped so as to be able to circulate the liquid in both directions to give the air a better chance to get out. This proved the cure. The comparative size of the pump delivery and the telemotor leads is important as the speed of the liquid is largely a function of this.

Instructions for Installing and Operating the American Recentering Telemotor.

Recentering telemotor, manufactured by American Engineering Co., Philadelphia, Pa.: Instructions for installing, filling and operating the recentering telemotor for operating steering gear.

General.—In the installation of the piping care should be taken to avoid locations where the temperature varies greatly during 24 hours. Avoid proximity to hot steam pipes and engine room where possible.

On boats which are to work in tropical climates where extreme heat may be expected, the system should be filled with clean, fresh water, whereas in colder climates glycerine should be added, as per following table:

Freezing Point.	Glycerine.	Freezing Point.	Glycerine.
Plus 25° F.	15%	Minus 5° F.	45%
Plus 15° F.	30%	Minus 20° F.	50%
Plus 5° F.	40%	Minus 30° F.	60%

Any mixture over 60 per cent glycerine is too thick to operate properly. Telemotor oil starts to congeal at about minus 15° F.

See that no sharp bends or pockets occur in the pipe line which will form air traps.

Filling.—Whether the system is filled with glycerine and water, telemotor oil or water, the important point is to eliminate entirely all the air.

Always fill the system from the lowest point, which should be the after end. Referring to the diagram, the filling tank *B* is filled with the liquid to be used in the system. The by-pass valves *J* on the forward telemotor and cocks *C*, *D* on the after telemotor, should be opened to permit the free flow of the liquid. The cock *R* at the supply tank *I* closed. With the spring telemotor the hand wheel should be set on center, so cams will hold valves *J* open.

The filling bucket should be kept nearly full, so that no air will be drawn through the pump *A* and forced into the system. The cocks *C* and *D* should be opened to permit the liquid to flow into one side of the system through *C* and return through *D*.

The liquid should be pumped through the system a number of times until there are no bubbles in the return pipe *L* flowing into the filling bucket *B*. In order to assist in this, it is sometimes well to partially close cock *D*. When the air bubbles cease, cock *D* should be closed, and cock *E* on the after telemotor opened while the pump is moving slowly to get rid of any air in the after telemotor, then cocks *E* and *C* should be closed, and the supply tank *I* in the pilot house filled.

With tank cock *R* open, cocks *G* and *H* on the forward telemotor open, the steering wheel *K* should be oscillated slowly from side to side to let the collected air escape through the cocks, closing each cock as the air ceases to flow. Repeat the process of opening and closing cocks *G* and *H* and of oscillat-

ing the steering wheel *K* until all of the air is fully worked out of the system, and replaced with liquid from the supply tank *I*. After this is done the air-cocks *G* and *H* should be finally closed.

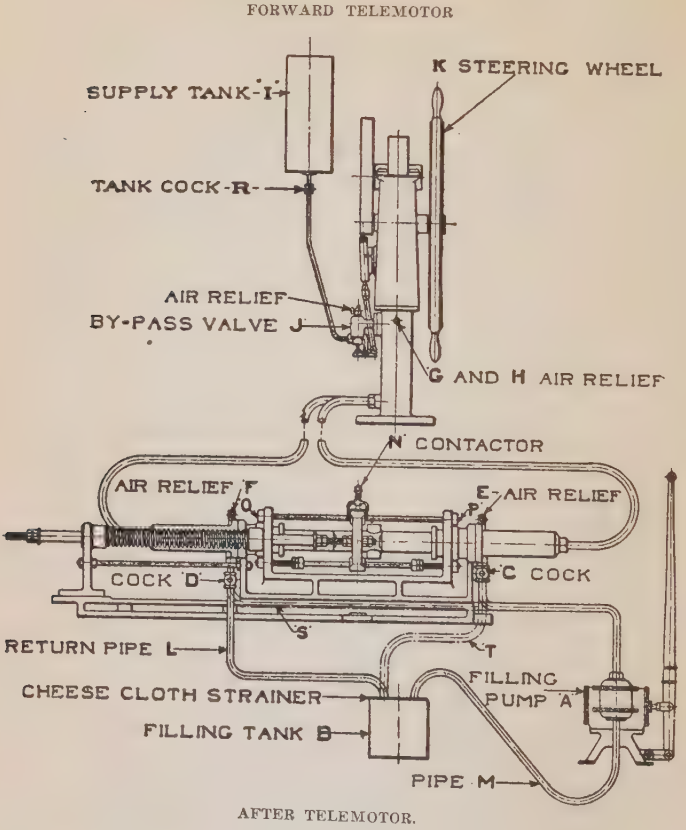

FIG. 25.—American Recentering Telemotor.

There is supplied on the after telemotor a commutator *N* and connections *O* and *P* for electric wiring. If a light is installed in the pilot house above the telemotor it will light

when the after telemotor is in central position. By means of this it can be told when the after telemotor is moved. When trying out the telemotor one-quarter turn in either direction from the center should cause a movement of the after telemotor, and the light should go out.

At times it is difficult to eliminate all the air from the system, and if it does not test out as shown above, it is advisable to operate as follows:

Place the wheel *K* off center, so that there is no communication between the two cylinders, open the air-cocks *G* and *H*, as the case may be, on the side in which there is the greater quantity of air; then pump the liquid from the after end up through the system, slowly, until several buckets of fluid have passed through, and then close. Repeat this on the other side of the system. In order to do this it will be necessary to install the pipes so that the pump can be connected to both cylinders, as shown in dot and dash lines *S* and *T* on diagram. (Do this pumping only if the air cannot be eliminated when following the directions noted above.) After pumping either one or both sides, as may be required, repeat the directions for oscillating the hand wheel, until all of the air is finally eliminated.

All air must be eliminated from the system to operate and function properly, and the air must be taken out through the forward end as this is the high point, and it is almost impossible to force air downward. The after telemotor stuffing boxes should be slacked up, and be kept just tight enough to prevent leakage, so that when the steering wheel is at the center the automatic opens the by-pass valve, and springs of the after telemotor will center same. This prevents trouble from any small leaks in the system.

Leaks in the piping system should be eliminated both on account of the loss of liquid, and to allow accurate functioning between forward and after telemotor. It is essential that

in filling the system all small particles shall be eliminated from the telemotor pipes, and if necessary water should be passed through the system from the top down, until it is thoroughly cleaned prior to filling with glycerine and water, or telemotor oil.

In filling the system all of the liquid should be filtered through several layers of cheese cloth, and it should be noted that no particles of dirt or waste pass into the tank which supplies the pump.

NOTE.—Where cock is furnished between by-pass valves, cock is to be closed only in case of accident to valves *J* and must be open at all other times.

DESCRIPTION AND INSTRUCTIONS FOR OPERATION OF BROWN TELEMOTOR.

It is of the utmost importance in this apparatus that all joints be water-tight, as any leakage will empty the small tank. After all the pipes are coupled and the connections made to the cylinders and to the tank in the wheelhouse, close the cock underneath the tank and fill to about one-third full with fresh water, and for cold climates add 30 per cent of refined glycerine, which keeps the parts lubricated and will resist frost to about zero Fahrenheit. (See table of freezing temperatures of various mixtures of water and glycerine.) Put the hand wheel in mid-gear, which will be seen by the pointer coming between the two zero marks on the indicator. This opens a by-pass between the top and bottom ends of the cylinder, and allows the whole system to be charged by one operation from the after part of the ship.

Open the valve *A* on the underside of the cylinder *B* or motor cylinder, after coupling on the discharge pipe *C* from the charging pump *D*, the suction pipe *E* being connected to the tank *F*, a piece of pipe *G* connecting the air valve *H* on back end of cylinder to the tank. The end of this must just come

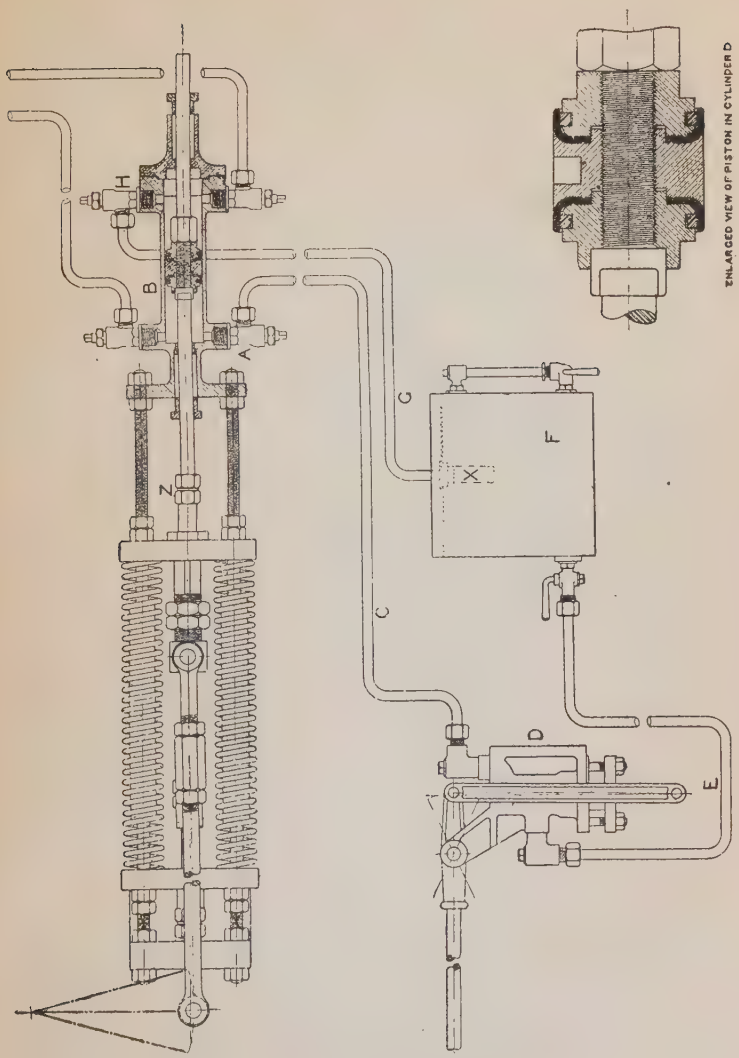

FIG. 26.—The Brown Telemotor.

over the filter *X* in tank *F*, from which the suction is taken. Open the air valve *H* on top and commence pumping, great care being taken that the liquid in the tank *F* never gets so low as to allow the pump to draw air, as the good working of the

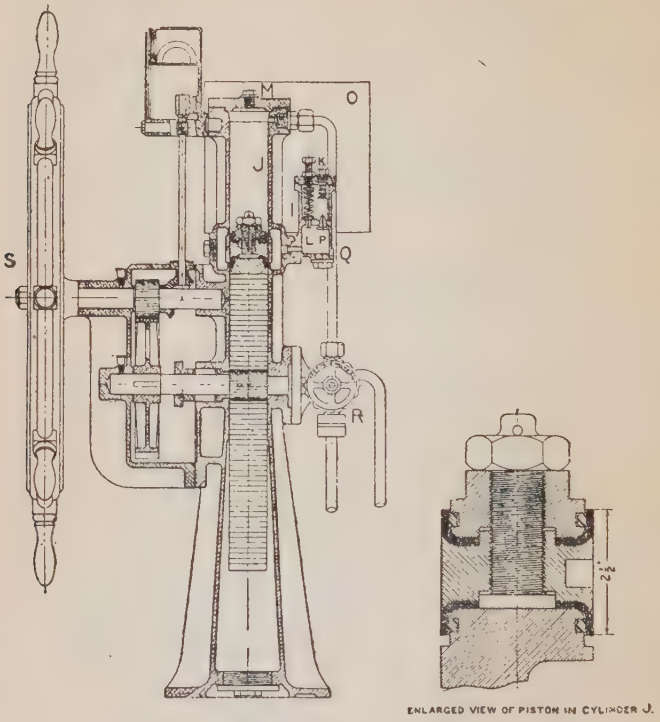

FIG. 26.—The Brown Telemotor.

gear depends on the air being expelled. The liquid will shortly be seen to run from the small pipe *G* back into tank *F;* but the pumping must be continued for some time, say three times as long as it took to begin to come back. By this time the air should nearly all have been driven out, and each stroke of the

pump *D* should show a corresponding rush, and not a continuous flow back through the return pipe *G*.

Being satisfied as to this, the air valve *H* on the top of the cylinder should be closed, and a slight but continuous strain kept on the pump *D*. Now go forward to the wheel house, and on the valve casing cover *I* on the cylinder *J* will be seen a brass plug *K;* remove it and press down the spindle of the suction valve *L,* which is immediately underneath, when the liquid will rush up, owing to the pressure being kept on by the pump *D* from aft. When the casing is quite full and no more air bubbles up, screw in the plug *K*. Also the plug *M* on top of forward cylinder should be slacked back to allow any air imprisoned in the cylinder to escape; then tighten up plug *M*. Open the valve underneath the tank *O* and close *A* on the underside of the motor cylinder *B,* when the telemotor will be fully charged and ready for use. The tank *O* in wheel house should always be kept at least half full and the valve on the bottom of it must always be open when the telemotor is in use.

The gear may now be tried by putting the wheel over to port and starboard, and noticing aft if a corresponding movement takes place in the piston of the motor cylinder. Should it not respond on one side or the other, then an internal leakage may be suspected; in which case examine the leathers in telemotor and motor cylinder.

The suction and relief valves *L* and *P* are not working valves, but merely open and shut as occasion requires, to allow for expansion and contraction of the fluid in the pipes, due to change of temperature.

The leathers in the pistons themselves will not cause any trouble until actually worn out, and even when in a leaky condition will work quite well and keep in correspondence with the gear aft in virtue of the spring always putting the gear into the central position when the forward piston enters the by-pass portion of the cylinder.

After having made any repairs that may be necessary, and before recharging, it is advisable to clean out the pocket *Q* that is placed beneath the valve casing on the bridge telemotor, for the purpose of collecting any dirt or sediment that may be in the liquid. This is done by removing the brass plug in the bottom, when the small quantity of liquid that flows out of the pocket will carry anything with it. *X* is a small portable filter to prevent dirt or other foreign matter from getting into the system, and it should always be in place when pumping up or filling the tank.

It frequently happens that owing to the action of the propeller, the ship requires a few degrees of port or starboard helm, which will be shown by the indicator on the bridge. If this is so, the connecting rod to the steering-gear valve should be lengthened or shortened as the case may be, and the springs aft will then, when adjusting, give the necessary permanent bias to the rudder, while the indicator on the bridge will show the gear amidship—that is, steering as if the propeller had no influence on the ship's course.

The capacity of the telemotor apparatus on the bridge is nearly double that of the motor cylinder aft, so that the ship could be steered on a course quite well when the indicator showed 45°, and the rudder fore and aft. This might happen with a very leaky and worn-out leather, but still the ship could be steered perfectly.

If the wheel is put to zero by the indicator, the gear aft will immediately get into correspondence, although for a moment the ship would be put slightly off her course. In confined waters or tortuous passages, in such an emergency the hand valve *R* can be used to effect the same object without interfering with the steering of the ship, by opening it and running the wheel to zero, care being taken to close it again. This, however, should never be used unless absolutely necessary, as quartermasters may try it out of curiosity, and, of course, if

they leave the valve open, the communication from the bridge to the gear aft becomes inoperative.

So far as is known, this valve has not been required for this purpose, but is placed there in view of an emergency as indicated above, and so that, when in dock or other place when the gear is not being used, it may be opened and the wheel can be moved from hard-over to hard-over without doing any injury to the gear.

In addition to the stuffing box of this valve, there are only three more—one on the cylinder on the bridge and two aft—and as the water pressure need never exceed 250 pounds per square inch, there is no reason for any serious loss of fluid in the tank. Keep the stuffing boxes full of greasy cotton packing, and screw up as lightly as is necessary to secure tightness, but not stiffness. It is advisable to occasionally examine the leathers in the telemotor and motor cylinder aft when the ship is in port. The necessity for this can be ascertained by pulling the steering wheel hard-over to port, and securing it there. The motor cylinder will be found to have responded to the same extent. If the gear is now left, say for half an hour, the spring in the motor cylinder will have moved the piston toward the midship position if there is any leakage in these leathers. A similar trial may be made to starboard which will test these leathers. To examine the leathers in the forward cylinder, it is only necessary to open the by-pass valve *R*, remove the nuts from the cylinder cover, and then turn the piston right up by means of the hand wheel. In the case of the after leathers, let go the large nuts *Z*, remove back cylinder cover and push piston out, closing the circuit valves to prevent loss of fluid. The circuit valve on back end of cylinder should be closed before removing cover, and the other one after the piston is out.

It need not be required that these leathers should be absolutely tight, but the motor piston should remain over for, say, ten minutes, without any serious movement toward midship position, that being about the maximum time that, in practice,

a helm would be held hard-over: and so any little deviation due to leaky leathers would be at once adjusted when the steering wheel is put to amidships, the motor springs putting the gear back to zero, through the by-pass allowing the free circulation of the fluid.

Care should be taken to lubricate with good oil the various working parts of the gear.

Great care should be taken when fitting new leathers to the transmitting cylinder, that these leathers are not longer over their edges than shown on the illustration, or the automatic by-pass will be rendered ineffective.

Opening valve *R* will assist charging system quickly, but valve *R* must be kept closed when telemotor is in operation.

Nonfreezing Fluid for Telemotors.

Water containing refined glycerine.	Safe to work at Fahrenheit.
25 per cent.....	Plus 18 degrees.
33 per cent.....	Plus 10 degrees.
50 per cent.....	Minus 20 degrees.
60 per cent.....	Minus 30 degrees, getting thick.
70 per cent.....	Too thick to work at minus 25 degrees.

DATA ON THE CARE AND OPERATION OF STEAM STEERING ENGINES.

The steering engine is primarily a steam power unit operating a tiller as follows:

It may be through a right- and left-hand screw attached (through nuts, sleeves and links) to a rudder crosshead.

It may be by means of a drum through a wire rope or chain leading from the drum to a quadrant on the rudder stock.

It may be by a steam engine mounted on a tiller operating in a rack, or it may be by means of a steam engine geared to a rack mounted on the stock.

The above are some of the more common forms of steering gears, and almost any type of steering gear can be considered as one of the above classes.

The operation of a steering engine is controlled by some convenient means from the pilot house, the control usually being through an automatic valve and the whole arrangement being such that as the wheel is turned in the pilot house, the steering engine will operate, and when the position indicated by the position of the indicator in the pilot house is reached by the tiller or crosshead, the engine will stop. In this way the engine follows closely the movement of the wheel in the pilot house so that the steersman can depend absolutely on the angle of the rudder.

In regard to the requirements for the care and operation of the steam steering engine, would advise that they are to a large degree the same as the care of any steam machine. There are, however, certain particular points which need careful attention and inspection. The first among these in the case of a drum-type machine is the chain or wire rope of the drum. Particularly in the case of the chain, periodic inspection should be made to see that the chain has not stretched so that it does not function properly over the wild-cat or on the drum; further, when in its central position, the rudder should also be in its central position. The riding of the chain on the wild-cats and drum has at times caused considerable trouble. With careful lubrication and periodic inspection, there should be no particular trouble in this matter.

In the case of the screw gear, lubrication is an important item, as there is very little to get out of order in this gear itself, except trouble due to lack of oil or grease on the screw and in the bearings.

This same is true of the quadrant type; that is, lubrication of the pinion and quadrant.

On the engine proper, and this applies to all types of steam steerers, the usual factor is the automatic and reverse valve.

In regard to the automatic itself, the principal trouble arises through the stop nuts not being located correctly or going out

of center. These stop nuts determine the maximum travel of the engine to right or left. They are adjusted by means of a split serrated collar and nut to the proper point of stop, and the traveling nut moves back and forth to one or the other of these end nuts. The operation of an automatic is as follows:

When the wheel in the pilot house is moved to the right or left by means of transmission telemotor, wire rope or other shaft, the automatic at the engine is moved so as to open the control valve, admitting steam and operating the engine in the direction required. As the engine operates, gears in mesh with the automatic shaft close this control valve until the engine stops at a point determined by the position and revolution of the wheel in the pilot house. The engine thus remains at rest until another movement of the wheel in the pilot house changes the position of the valve, opening it to right or left as may be required.

Another point of difficulty in connection with this control valve is that occasionally the control valve itself becomes displaced with regard to central position, so that when the automatic indicates a central or neutral position, the valve, instead of being closed, is partially opened. In all types of gears, therefore, care should be exercised to see that when the pilot house wheel is at neutral, the position of the automatic at the engine is also neutral, the control valve is at central and the steam ports are closed.

The steam valves at the cylinders are set as in any other steam engine. They do not, however, have any lap or lead such as occurs when a link motion control is used.

Important Points.—From the above, you will note that the principal requirement is sufficient lubrication primarily. Aside from this, the other important problem is noting that the valves, automatic and control, in the pilot house or elsewhere, are in accord.

BOAT ANCHORS.

Material and Quality.—Boat anchors shall be forged from high-grade refined iron, and shall be of good workmanship and free from all defects which may affect their serviceability.

Plan.—Boat anchors shall be in accordance with plan incorporated in and forming a part of these specifications. (See Fig. 27.)

Sizes and Dimensions.—Boat anchors shall be furnished in the following sizes, as required, the dimensions conforming approximately to those given in Table 7:

Table 7.

Weight.	Length of shank. A	Length of stock. B	Distance from pee to pee. C	Angle of palms with shanks.	Ring.		Palm. G	Pee. F
					Inside diameter. D	Outside diameter. H		
Pounds.	*In.*	*In.*	*In.*	*Degrees.*	*In.*	*In.*	*In.*	*In.*
30	35	35	23	55	3½	4½	5	6½
40	37	37	24	55	4	5¼	5½	6½
50	41	41	25	55	4½	6	5¾	7⅓
60	42	42	27	55	4½	6	6	7½
75	46	46	29	55	5	6½	6½	9
90	46	47	30	55	5	6¾	7	9
100	50	50	32	55	5	6¾	7	9½
120	53	53	34	55	5½	7½	7½	10

Construction.—All palms shall be welded to arms, or made integral with same; and a loosely fitting ring shall be welded in the head of the shank. All welds shall be close. A ball shall preferably be forged on each end of the stock, but a cast-iron ball riveted on the loose end of the stock will be permissible. The key shall be tied on. No chain lanyard shall be provided.

Finish.—All parts shall be thoroughly and evenly galvanized by the hot process; galvanizing to consist of not less than 97½ per cent pure zinc.

Marking.—The weight in pounds shall be plainly impress-stamped on both sides of the crown.

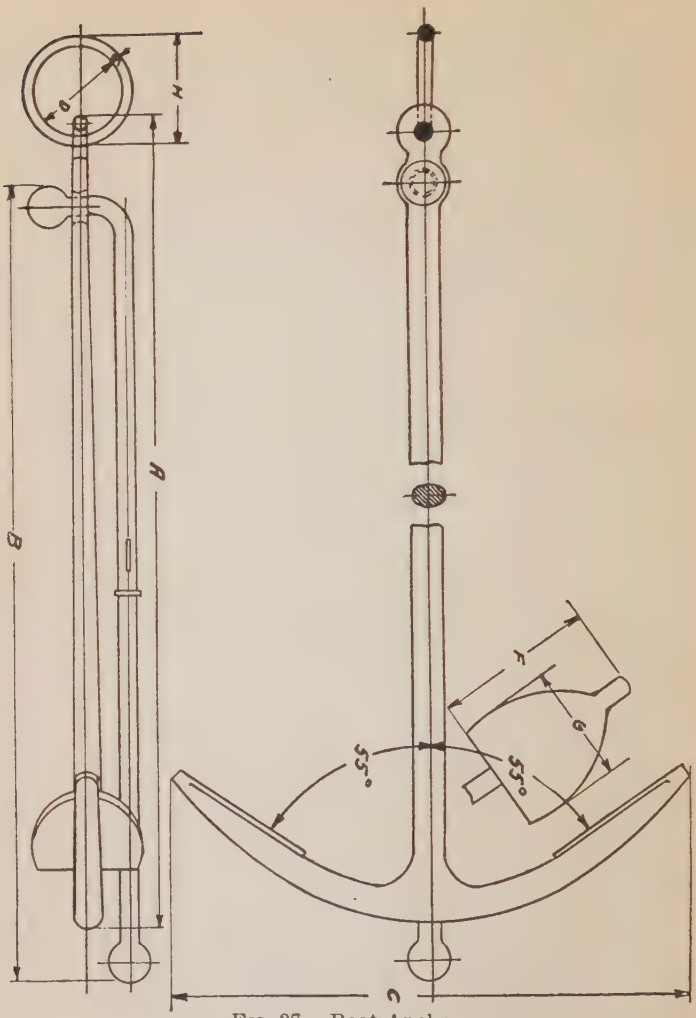

FIG. 27.—Boat Anchor.

CAST-STEEL ANCHORS, NAVY TYPE.

Material.—The anchor proper and the balls shall be made of cast steel. The stocks, rings, pins, shackles, balancing bands, and fittings complete shall be made of forged steel.

Castings.—The castings shall comply in all respects with the requirements for " Class B " of the current edition of the specifications for steel castings, issued by the Navy Department, and in addition shall meet the requirements as to annealing and the drop test given below.

Annealing.—The number of hours of heat treatment to which the castings shall be subjected shall be as follows:

	Hours.
Time to raise to annealing temperature	18
Time to hold at annealing temperature	30
Time to cool from annealing temperature	24

Drop and Percussive Tests.—Each anchor casting shall be slung in chains as directed by the inspector and shall be dropped on a steel slab not less than 2 inches thick. It shall then be dropped, crown down, on two steel blocks. The height from which these drop tests shall be made shall be 12 feet from the lowest part of the casting to the slab, or blocks. The casting shall then be suspended in slings and subjected to the percussive test prescribed for large castings in the standard specifications referred to in paragraph above.

Forgings.—The forgings shall comply in all respects with the requirements for " Class BS " of the current edition of the specifications for steel hull and engine forgings issued by the Navy Department.

Workmanship.—The anchor shall conform to the approved plans, shall be free from all injurious defects, and shall have a workmanlike finish. The collar on the stock shall fit up close to the face of the shank. The ball on the straight end of the stock may be forged with the stock or it may be cast and riveted on as preferred by the manufacturer. The ball on the bent end

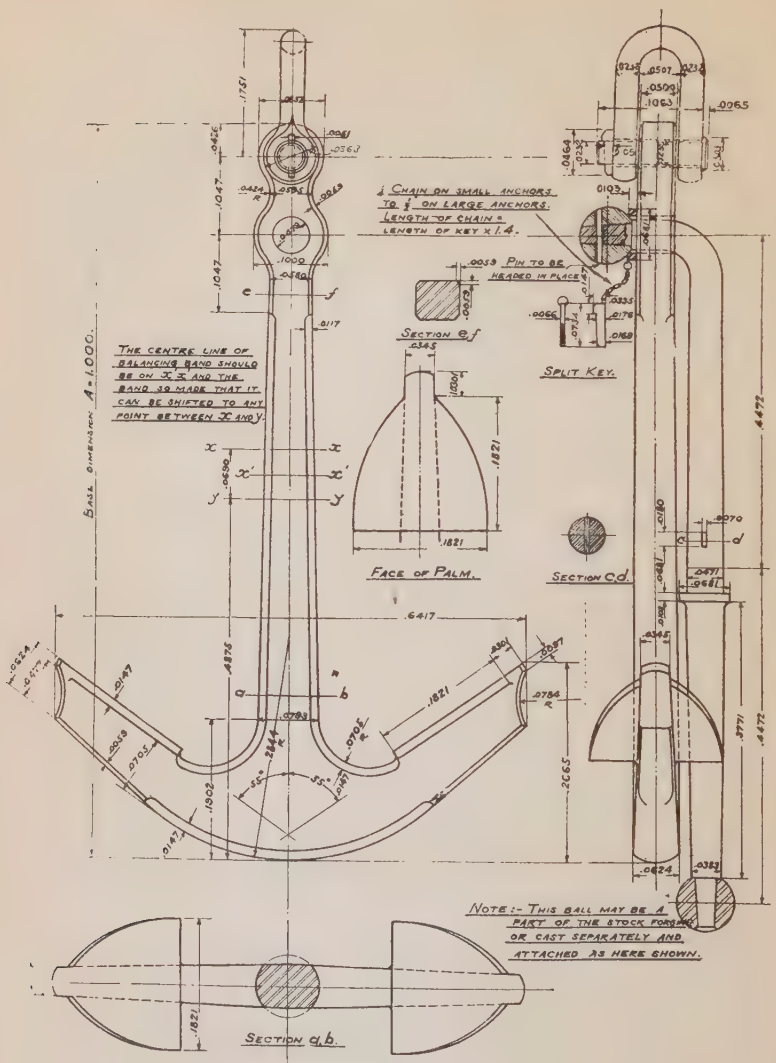
BASIL DIMENSION A = 1.000.
THE CENTRE LINE OF BALANCING BAND SHOULD BE ON X X AND THE BAND SO MADE THAT IT CAN BE SHIFTED TO ANY POINT BETWEEN X AND Y
⅛ CHAIN ON SMALL ANCHORS TO ½ ON LARGE ANCHORS. LENGTH OF CHAIN = LENGTH OF KEY × 1.4.
.0039 PIN TO BE HEADED IN PLACE
SECTION e f
SPLIT KEY.
FACE OF PALM.
SECTION c d
SECTION a b.
NOTE:- THIS BALL MAY BE A PART OF THE STOCK FORGING OR CAST SEPARATELY AND ATTACHED AS HERE SHOWN.

FIG. 28.—Navy Type Anchor.

of the stock must be cast and must be pinned to the stock, the ends of the pin being flush with the surface of the ball. The keys for the ring pins and through the stock shall be split at one end.

Weight; Tolerance.—Anchors varying from the weight ordered more than 4 per cent over or 2 per cent under will be rejected. The department shall not be called upon to pay for any excess in weight, the weight called for in such cases deciding the price of the anchor.

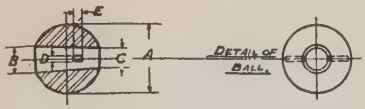

FIG. 29.—Detail of Ball, Navy Type Anchor.

Marking.—The anchors shall be marked as follows in 1-inch letters and 1½-inch figures: Upon one side of the crown the actual weight in pounds, the year of fabrication, and "U. S. Navy"; upon the other side of the crown the commercial name of the anchor and the initials of the inspector. In case the anchor is too small to permit of the use of 1-inch letters and 1½-inch figures, smaller letters and figures, subject to the approval of the inspector, will be permitted.

Materials.—Anchor, cast steel. Stock, ring, pins, shackle, balancing band and fittings, forged open-hearth steel. Balls, cast steel.

Table 8.—Cast Steel.

Weight of anchor in pounds.	A	B	C	D	E	Weight of anchor in pounds.	A	B	C	D	E
300- 400	4	1 3/8	1 1/4	1/2	1/2	5400- 6199	9 1/2	4	3 1/4	5/8	1 3/8
401- 599	4 1/2	1 7/16	1 3/8	1/2	1/2	6200- 7199	10	4 3/8	3 3/4	5/8	1 1/2
600- 799	5	1 3/4	1 1/2	1/2	1/2	7200- 8199	10 1/2	4 5/8	4	3/4	1 5/8
800- 999	5 1/2	2	1 3/4	5/8	5/8	8200- 9399	11	4 3/4	4 1/4	3/4	1 3/4
1000-1500	6	2 1/4	2	5/8	5/8	9400-10799	11 1/2	5 1/8	4 1/2	7/8	1 7/8
1501-1799	6 1/2	2 1/2	2 1/4	1/2	5/8	10800-12099	12	5 3/8	4 3/4	7/8	1 3/4
1800-2599	7	2 3/4	2 1/2	1/2	1	12100-13599	12 1/2	5 5/8	4 7/8	7/8	1 7/8
2600-2999	7 1/2	3	2 3/4	1/2	1	13600-15499	13	6	5 1/4	7/8	1 7/8
3000-3899	8	3 1/4	2 3/4	1/2	1 1/8	15500-16999	13 1/2	6 1/4	5 5/8	1	2
3900-4499	8 1/2	3 1/2	3	5/8	1 1/4	17000-18999	14	6 1/2	5 5/8	1	2
4500-5399	9	3 3/4	3 1/4	5/8	1 1/4	19000-20999	14 1/2	6 3/4	5 3/4	1 1/8	2 1/8

STOCKLESS ANCHORS.

(Navy Department Specifications.)

General.—The current edition of the "General Specifications for the Inspection of Steel and Iron Material, General Specifications—Appendix 1," issued by the Navy Department (Bureau of Construction and Repair), shall form part of these specifications.

Drawings.—The general shape and type of the anchor and its fittings shall be as shown in Figs. 30 and 31. Bids under these specifications shall state the make of the anchor proposed. Vandyke prints in cloth of the working plans shall be submitted to the Bureau of Construction and Repair for approval before the manufacture of the anchors is started.

Material.—The anchor proper shall be made of cast steel. The rings, pins, shackles, shanks, and balancing bands complete shall be forged steel.

Castings.—The castings shall comply in all respects with the requirements for "Class B" of the current edition of the specifications for steel castings issued by the Navy Department, and in addition shall meet the requirements as to annealing and the drop test given below.

Annealing.—The number of hours of heat treatment to which the castings shall be subjected shall be as follows:

Time to raise to annealing temperature, 18 hours.

Time to hold at annealing temperature, 30 hours.

Time to cool from annealing temperature, 24 hours.

Drop and Percussive Tests.—Each anchor casting shall be slung in chains as directed by the inspector, and shall be dropped on a steel slab not less than 2 inches thick. It shall then be dropped crown down on two steel blocks. The height from which these drop tests shall be made shall be 12 feet from the lowest part of the casting to the slab or blocks. The casting shall then be suspended in slings and subjected to the per-

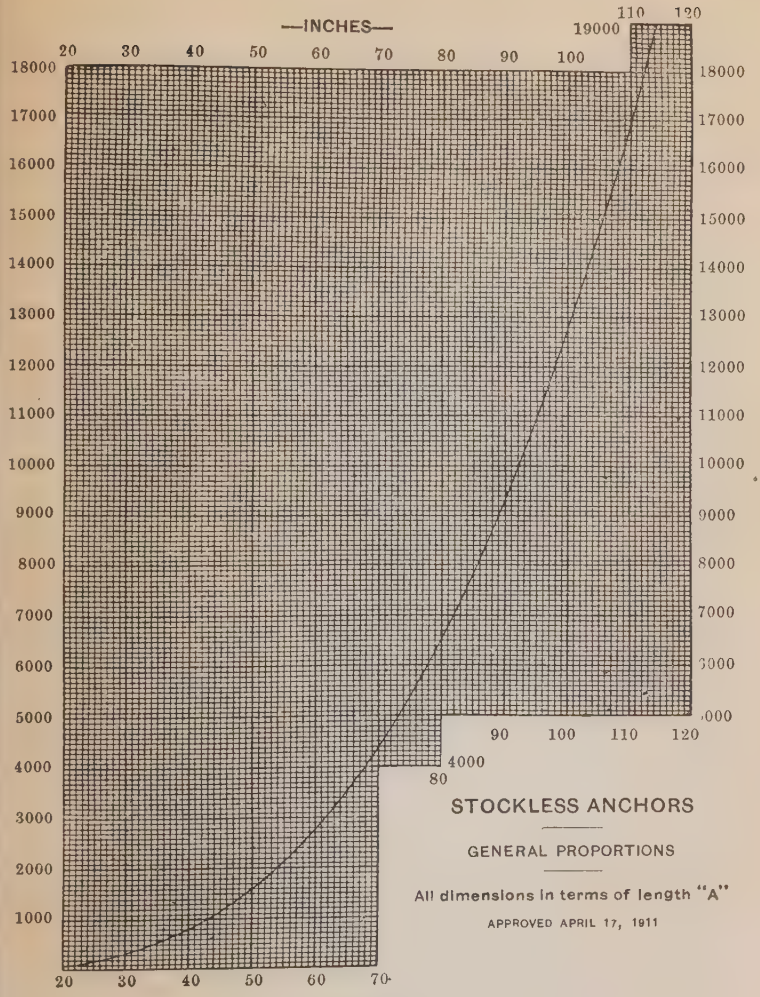
—INCHES—
20 30 40 50 60 70 80 90 100 110 120
18000
17000
16000
15000
14000
13000
12000
11000
10000
9000
8000
7000
6000
5000
4000
3000
2000
1000
19000
4000
80
90 100 110 120
STOCKLESS ANCHORS
GENERAL PROPORTIONS
All dimensions in terms of length "A"
APPROVED APRIL 17, 1911

FIG. 30.

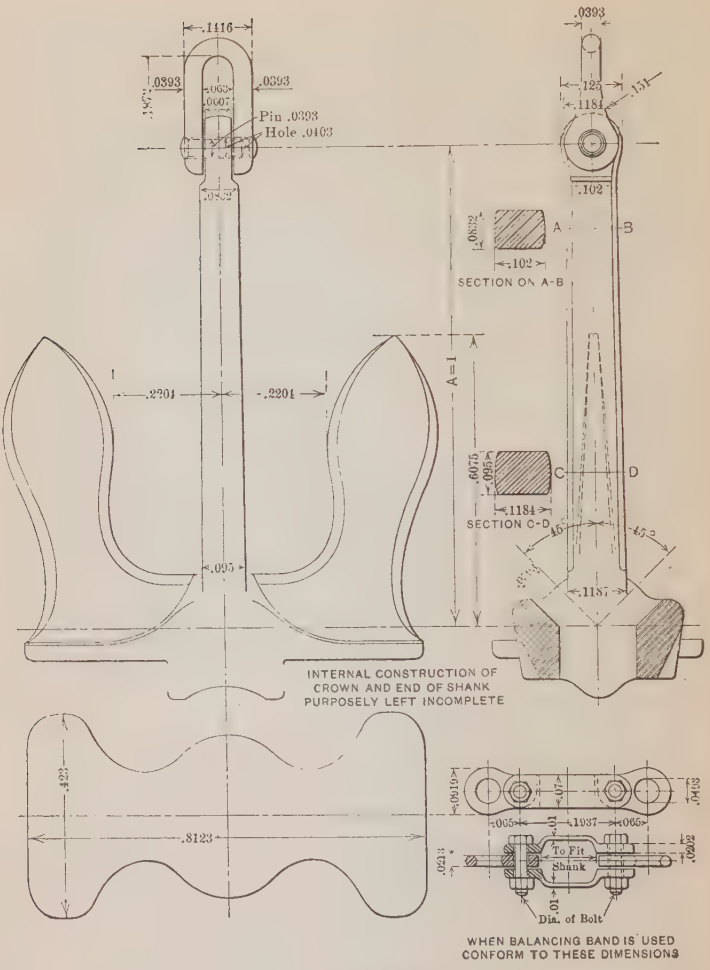

FIG. 31.—Stockless Anchor.

cussive test prescribed for large castings in the standard specifications referred to in paragraph above.

Forgings.—The forgings shall comply in all respects with the requirements for " Class BS " of the current edition of the specifications for steel hull and engine forgings issued by the Navy Department.

Workmanship.—The anchors shall conform to the approved plans, shall be free from all injurious defects, and shall have a workmanlike finish. The shackle pins shall be full size throughout, and shall fit their holes with $\frac{1}{16}$-inch total clearance for anchors up to 10,000 pounds weight, inclusive, and $\frac{1}{8}$-inch total clearance for all anchors above 10,000 pounds weight.

Weight; Tolerance.—Anchors varying from the weight ordered more than 4 per cent over or 2 per cent under will be rejected. The department shall not be called upon to pay for any excess in weight, the weight called for in such cases deciding the price of the anchor.

Marking.—The anchors shall be marked as follows in 1-inch letters and $1\frac{1}{2}$-inch figures: Upon the flat of the crown the actual weight in pounds, the year of fabrication, and " U. S. Navy "; upon the flat of the crown on the other side the commercial name of the anchor and the initials of the inspector. In case the anchor is too small to permit of the use of 1-inch letters and $1\frac{1}{2}$-inch figures, smaller letters and figures, subject to the approval of the inspector, will be permitted.

ROPE USED IN THE NAVY.

Abstracts from Navy Department Specifications, 21R3 of January 15, 1913.

Material made up at the Ropewalk Navy Yard, Boston, Mass.

Ship's requisitions and requisitions for small quantities for particular purposes should be made in fathoms.

Requisitions for stock at navy yards should be made in pounds.

Table 9.
Manila Hemp Rope, Plain Laid.

Name and circumference.	Weight per fathom.	Length of coil.	Weight of coil.	Breaking strain.
	Pounds.	*Fathoms.*	*Pounds.*	*Pounds.*
6-thread, ¾-inch	.12	250	30	700
9-thread, 1 -inch	.20	150	30	1,100
12-thread, 1⅛-inch	.25	120	30	1,500
15-thread, 1¼-inch	.30	100	30	1,800
18-thread, 1⅜-inch	.35	150	52	2,000
21-thread, 1½-inch	.50	200	100	2,500
1¾-inch	.60	200	120	3,000
2 -inch	.83	200	167	4,000
2¼-inch	1.00	200	204	5,000
2½-inch	1.26	150	190	5,550
2¾-inch	1.55	150	225	6,600
3 -inch	1.83	150	277	7,800
3¼-inch	2.16	150	325	9,200
3½-inch	2.54	150	380	10,500
3¾-inch	2.80	150	420	12,200
4 -inch	3.25	150	487	13,700
4¼-inch	3.66	150	550	14,900
4½-inch	4.00	150	600	17,400
4¾-inch	4.40	150	660	19,000
5 -inch	5.00	150	750	21,800
5¼-inch	5.50	150	825	23,700
5½-inch	6.00	150	900	27,000
6 -inch	7.24	150	1,087	31,000
6½-inch	8.43	150	1,275	33,500
7 -inch	9.80	150	1,470	36,200
7½-inch	11.20	150	1,680	42,300
8 -inch	13.00	150	1,950	47,300
8½-inch	14.40	150	2,160	54,200
9 -inch	16.20	150	2,430	60,000
9½-inch	18.00	150	2,700	67,000
10 -inch	20.00	150	3,000	74,200

Manila Hemp Towlines, Plain Laid.

5-inch	5.33	120	640	21,800

Manila Hemp, Plain Laid, Hawsers.

6-inch	7.90	120	950	31,000
7-inch	10.40	120	1,250	36,200
8-inch	13.30	120	1,600	47,300
9-inch	17.20	120	2,060	60,000
10-inch	22.16	120	2,660	74,200

Table 9.—Continued.

American Hemp Rope, Tarred, Plain Laid, Three-Strand.

Name and circumference.	Weight per fathom.	Length of coil.	Weight of coil.	Breaking strain.
	Pounds.	*Fathoms.*	*Pounds.*	*Pounds.*
¾-inch	.31	200	62	750
1 -inch	.36	200	72	1,060
1¼-inch	.40	200	80	1,670
1½-inch	.50	200	100	2,340
1¾-inch	.63	200	126	3,325
2 -inch	.96	200	192	3,955
2¼-inch	1.28	200	256	4,718
2½-inch	1.56	150	235	5,770
2¾-inch	1.90	150	285	7,000
3 -inch	2.24	150	336	8,380
3¼-inch	2.66	150	400	9,770
3½-inch	3.06	150	460	11,200
3¾-inch	3.53	150	530	13,000
4 -inch	4.00	150	600	14,550

Ratline Stuff and Similar Material Made up on Special Orders of Tarred American Hemp.

6-thread, ¾-inch	.18	100	18	650
9-thread, 1 -inch	.25	100	25	1,120
12-thread, 1¼-inch	.35	100	35	1,500
15-thread, 1½-inch	.45	100	45	1,800
18-thread, 1⅝-inch	.53	100	53	2,100
21-thread, 1¾-inch	.60	100	60	2,400
24-thread, 1⅞-inch	.70	100	70	2,650

Seizing Stuff—Tarred American Hemp.

4-thread, ½-inch	.095	100	50	365
6-thread, ⅝-inch	.120	100	50	560
9-thread, ¾-inch	.165	100	50	700
12-thread, 1-inch	.210	100	60	955

American Hemp Bolt Rope.

1 -inch	.27	100	27	1,120
1¼-inch	.37	100	37	1,780
1½-inch	.53	100	53	2,470
1¾-inch	.70	100	70	3,500
2 -inch	.94	100	94	4,300
2¼-inch	1.18	100	118	5,550
2½-inch	1.50	100	150	6,790
2¾-inch	1.75	100	175	8,220
3 -inch	2.11	100	211	9,800
3¼-inch	2.44	100	244	11,493
3½-inch	2.84	100	284	13,220
3¾-inch	3.33	100	333	15,300
4 -inch	3.72	100	372	17,000
4¼-inch	4.25	100	425	19,600
4½-inch	4.74	100	474	22,050
4¾-inch	5.38	100	538	24,400
5 -inch	6.00	100	600	26,900

Table 9.—Continued.

American Hemp Rope, Tarred, Plain Laid, Four-Strand.

Name and circumference.	Weight per fathom.	Length of coil.	Weight of coil.	Breaking strain.
	Pounds.	*Fathoms.*	*Pounds.*	*Pounds.*
1½-inch	.60	200	120	1,800
1⅝-inch	.77	200	155	2,490
2 -inch	.96	200	192	3,085
2¼-inch	1.20	200	240	4,340
2½-inch	1.60	150	240	5,250
2⅝-inch	1.90	150	285	6,352
3 -inch	2.20	150	330	7,560
3¼-inch	2.70	150	405	8,870
3½-inch	3.00	150	450	10,290
3⅝-inch	3.50	150	525	11,812
4 -inch	4.00	150	600	12,440
4¼-inch	4.50	150	675	15,170
4½-inch	5.00	150	750	17,010
4⅝-inch	5.70	150	855	18,952
5 -inch	6.40	150	960	21,000
5¼-inch	7.00	150	1,050	23,152
5½-inch	7.75	150	1,162	25,410
5⅝-inch	8.52	150	1,278	28,773
6 -inch	9.30	150	1,395	30,240
6½-inch	10.75	150	1,612	35,532
7 -inch	12.30	150	1,845	40,202
7½-inch	14.30	150	2,145	46,350
8 -inch	16.50	150	2,475	53,172
8½-inch	19.00	150	2,850	60,480
9 -inch	21.00	150	3,150	67,040

N.B.—This rope is made up in four strands only on special orders.

Galvanized Steel Wire Rope.—Type A.

Composed of 6 strands, with a hemp core, 19 wires to a strand; or 18 wires, with a center of jute, cotton, or hemp twine.

Diameter.	Approximate circumference.	Weight per fathom.	Weight per coil, 100 fms.	Breaking strain.	Use.
Inches.	*Inches.*	*Pounds.*	*Pounds.*	*Pounds.*	
1/16	1	0.90	90	6,170	Standing rigging.
5/64	1¼	1.27	127	8,740	Guys.
7/64	1¼	1.71	171	11,760	Boat slings, running rigging 7/64-inch and less.
¼	1½	2.23	223	15,230	Topping lifts.
9/64	1⅝	2.80	280	19,150	(For coaling booms.)
5/16	2	3.60	360	24,680	
11/32	2½	5.07	507	34,980	Wheel ropes.
13/32	2½	5.94	594	40,800	(7/32-inch and under.)
7/16	2¾	6.88	688	47,040	
1	3	9.00	900	60,960	
1 1/16	3¼	10.80	1,080	70,550	
1 1/8	3½	11.60	1,160	78,730	
1 3/16	3¾	13.00	1,300	87,320	
1¼	4	14.48	1,448	98,720	
1 5/16	4¼	17.30	1,730	118,450	
1 7/16	4½	18.80	1,880	128,980	
1½	4¾	20.38	2,038	139,960	
1⅝	5	23.23	2,323	160,230	

Table 9.—Continued.

Plow Steel Wire Rope.—Type A.

Composed of 6 strands, with a hemp core, 19 wires to a strand; or 18 wires, with a center of jute, cotton, or hemp twine.

Diameter.	Approximate circumference.	Weight per fathom.	Weight per coil, 100 fms.	Breaking strain.	Use.
Inches.	*Inches.*	*Pounds.*	*Pounds.*	*Pounds.*	
⅜	1⅛	1.27	127	10,340	
7/16	1⅓	2.23	223	18,000	
½	2	3.60	360	29,160	
9/16	2¼	5.07	507	41,350	
⅝	2⅔	6.88	688	55,640	
¾	3	9.00	900	72,040	
7/8	3½	11.60	1,160	93,040	
1	4	14.48	1,448	116,690	
1 1/16	4⅓	18.80	1,880	152,430	

Galvanized Steel Wire Rope.—Type B.

Composed of 6 strands and a hemp core, each strand consisting of 12 wires and a hemp center.

¼	¾	0.42	42	2,700	
5/16	1	.70	70	4,660	Life lines.
⅜	1⅛	1.00	100	6,600	Guys.
7/16	1⅓	1.23	123	8,880	Ridge ropes.
½	1½	1.70	170	11,500	Boat ladders.
9/16	1⅝	2.26	226	14,470	Jacob's ladders.
⅝	2	2.74	274	18,640	Gunport lanyards.
¾	2⅓	3.87	387	26,430	Room pendants.
13/16	2⅜	4.47	447	30,830	Running rigging.
⅞	2¾	5.42	542	35,560	
1	3	6.80	680	46,060	
1 1/16	3¼	7.89	789	53,300	
1⅛	3½	8.70	870	59,490	
1 3/16	3¾	9.90	990	65,970	
1¼	4	11.27	1,127	74,590	
1⅜	4¼	13.26	1,326	89,490	
1 7/16	4½	14.57	1,457	97,450	
1½	4⅝	15.90	1,590	105,740	
1⅝	5	17.92	1,792	121,060	

Galvanized Steel Wire Rope.—Type AA.

Composed of 6 strands, with a hemp core, each strand consisting of 37 wires, or 36 wires with a hemp, jute, or cotton center.

⅜	1⅛	1.32	132	8,460	
7/16	1⅓	1.80	180	11,520	
½	1½	2.34	234	16,330	
9/16	1⅝	3.00	300	19,040	Towing hawsers; crane falls; bridles, large and small; tiller ropes; tiller ropes on ships' boats; cat and fish pendants; clear hawse pendants; dip ropes; torpedo slings, and slings for general hoisting.
⅝	2	3.72	372	23,520	
¾	2⅓	5.34	534	35,730	
⅞	2¾	7.20	720	46,150	
1	3	9.48	948	60,170	
1⅛	3⅓	12.00	1,200	76,200	
1¼	4	14.70	1,470	94,000	
1⅜	4⅓	18.00	1,800	113,800	
1½	4⅔	21.30	2,130	131,690	
1⅝	5	24.90	2,490	154,880	
1¾	5½	29.10	2,910	184,300	
2	6⅓	37.80	3,780	240,760	
2¼	7⅛	48.00	4,800	299,100	

Table 9.—Continued.

Plow Steel Wire Rope.—Type AA.

Composed of 6 strands, with a hemp core, each strand consisting of 37 wires, or 36 wires with a hemp, jute, or cotton center.

Diameter.	Approximate circumference.	Weight per fathom.	Weight per coil, 100 fms.	Breaking strain.	Use.
Inches.	*Inches.*	*Pounds.*	*Pounds.*	*Pounds.*	
$\frac{3}{8}$	$1\frac{1}{8}$	1.32	132	10,000	Transmission rope for steering gear; boat crane falls; crane falls, afloat and ashore; hawsers where great strength is required, relieving tackles.
$\frac{1}{2}$	$1\frac{1}{2}$	2.34	234	19,300	
$\frac{5}{8}$	2	3.72	372	27,790	
$\frac{3}{4}$	$2\frac{1}{4}$	5.34	534	40,000	
$\frac{7}{8}$	$2\frac{3}{4}$	7.20	720	54,400	
1	3	9.48	948	71,100	
$1\frac{1}{8}$	$3\frac{1}{2}$	12.00	1,200	90,000	
$1\frac{1}{4}$	5	24.90	2,490	183,000	
2	$6\frac{1}{4}$	37.80	3,780	284,500	

Galvanized Steel Wire Rope.—Type BB.

Composed of 6 strands and a hemp core, each strand consisting of 30 wires around a center of hemp, jute, or cotton twine. Strength, 10 per cent less than that of galvanized steel wire rope, Type A. Sufficient data have not been obtained to tabulate this type to any extent.

$\frac{3}{8}$	$1\frac{1}{8}$	1.20	120	8,060	
$\frac{1}{2}$	$1\frac{1}{2}$	2.00	200	15,500	
$\frac{5}{8}$	2	3.30	330	22,390	
$\frac{3}{4}$	$2\frac{1}{4}$	4.80	480	32,240	

Navy Standard Mooring Hawsers.—Type C.

Composed of 6 strands with a hemp core, each strand consisting of 14 wires and a center of hemp or jute yarn.

Large eye splice fitted at one end and thimble in opposite end to attach to reel.

$\frac{13}{16}$	$2\frac{1}{2}$	.....	447	28,400	Note that navy standard mooring hawsers may be made in the following lengths: $1\frac{1}{8}$-inch, 640 fathoms; $1\frac{1}{4}$-inch, 490 fathoms; $1\frac{7}{8}$-inch, 375 fathoms; $1\frac{5}{8}$-inch, 300 fathoms.
1	3	.....	644	41,500	
$1\frac{1}{8}$	$3\frac{1}{2}$	.....	880	53,740	
$1\frac{1}{4}$	4	.....	1,080	69,380	
$1\frac{7}{8}$	$4\frac{1}{2}$	.....	1,377	87,000	
$1\frac{5}{8}$	5	.....	1,750	113,700	

Galvanized Annealed Steel Wire Seizing Stuff.

Diameter.	Weight per fathom.	Weight per coil, 100 fathoms.	Length of coil.	Breaking strain.	Wires.
Inches.	*Pounds.*	*Pounds.*	*Fathoms.*	*Pounds.*	
$\frac{1}{16}$	0.06	50	830	268	7
$\frac{3}{32}$	.12	50	415	558	7
$\frac{1}{8}$	.20	50	250	960	7
$\frac{5}{32}$	.30	50	166	1,475	7
$\frac{3}{16}$	.50	100	200	2,300	19
$\frac{1}{4}$	.80	100	125	3,790	19

Phosphor-Bronze Wire Rope.

Type A.—Used for periscope guys and nets on masts.

Type B.—Used for life lines (destroyers and submarines), awning ridge ropes, etc.

Silicon-Bronze Wire Rope.

Used as an economical substitute for phosphor-bronze wire rope for life lines (destroyers and submarines).

Antennæ wires for aerials.

Wire rope is measured by its diameter in inches.

When used over a sheave, the diameter of the sheave should be more than fifteen times the diameter of the rope, and the less flexible the rope the larger should be the sheave.

Operation of Wire Rope.—The principal causes of deterioration of wire rope are heavy abrasion, overstrain, bending, and corrosion. Evidence of abrasion is shown by the outside wires wearing thin in a short time. If the wires are little worn, break off squarely, sticking out all over the rope, there is evidence of an overload or severe bending.

Size of Sheave.—The diameter of the sheave should be greater than fifteen times the diameter of the rope, and for inflexible rope a still larger diameter of sheave must be used. Ordinary commercial practice allows 1 foot diameter of sheave for $\frac{1}{4}$-inch diameter of the rope.

Factor of Safety.—A factor of safety of five is recommended. For cranes and falls upon which there is sudden and repeated stress, it is safer to figure a factor of safety upon the elastic limit of the material rather than upon the tensile strength.

Lubrication.—The wear upon a running rope is both external and internal, and as it is impossible in the manufacture of the rope to provide lubrication for the entire life of the rope, it becomes necessary to use a lubricant of such a nature that it will penetrate to the center of the rope. A heavy-bodied oil with good black lead is a good lubricant and is cheaper and as

satisfactory as any of the proprietary lubricants. A heavy viscous preparation covering the outside of the rope does not give the internal lubrication necessary.

SILVER PLATING MIRRORS.

Wash glass with warm water and just a little potash; if glass is old, remove all old silver with a little nitric acid. Wash again to remove acid. Scrub with rouge and water, using a block of felt; wash with clean water to remove rouge.

Level up glass, pour water on to test levelness, tilt to run off water, then set level again.

Pour Solutions A and B together and pour over glass. Keep glass at about 100° by having glass raised on blocks and keeping warm water underneath it.

Rinse with clean water; do this very carefully so as not to mar the silvered surface.

When dry, cover back with lacquer and paint with mirror paint.

Solutions. (Norfolk Navy Yard Process.) Solution A.—Dissolve 6 grains silver nitrate and 5 grains rochelle salts in 50 ounces of hot water.

Solution B.—Dissolve 1 ounce silver nitrate in cold water, add 3 ounces rochelle salts, 1 gallon water, drop in 60 grains caustic potash. Stir until all is dissolved. Filter.

When ready to silver pour Solutions A and B together and apply.

Vacuum Specialty Co.'s Practice. Solution A.—Same as Solution A, Norfolk Navy Yard process.

Solution B.—Dissolve 10 grains silver nitrate in 6 ounces water. Add enough ammonia to bring to a high color. Filter and add 35 ounces water.

When ready to silver pour Solutions A and B together and apply.

These solutions must be made up and used as required, and should be kept in glass containers.

PAINT FOR BACKS OF MIRRORS.

Turpentine asphaltum	1 qt.
Damar varnish	4 oz.
White lead	2 oz.
Turpentine	3 oz.

Dissolve the white lead in turpentine. Add the other ingredients and mix thoroughly.

This is a very good black, water-proof paint, and dries hard in about one hour. Quoted originally in "Metal Industry," New York, and tried out satisfactorily at Norfolk.

The following is considered to be an excellent preparation for the backs of mirrors; it should only be used, however, when facilities for applying a copper-plated backing is not available:

Yellow ocher, dry	1½ lbs.
Silica, dry	½ lb.
Indian red, dry	½ lb.
Pine tar	¼ gal.

HOT GALVANIZING.

Steel and Wrought Iron Work.—Clean parts in potash to remove dirt and grease in a solution made up of 1 pound carbonate of potash to 1 gallon water; it is used hot.

Rinse to remove excess potash.

Pickle in solution of 1 part sulphuric acid and 30 parts water to remove scale or zinc coating in case of galvanized stuff. Parts can be left in this solution from 12 to 18 hours without injury; less time requires stronger solution. Life indeterminate; is never renewed. Vats cleaned out occasionally and solution built up. Cutting off galvanizing in the solution kills the solution.

Wire brush with sand and water to remove any small particles that may not have been removed in the pickle.

Rinse in water.

Dip in a "quick-fluxing solution" made up of one part hydrochloric acid (muriatic acid) and 15 parts of water, for final cleaning.

Lay on hearth to dry and sprinkle with powdered sal-ammoniac.

Lower the article slowly into zinc and allow to remain until heated to the same temperature of the molten zinc.

Remove and slake off excess zinc.

Dip in cold water.

All vats for the above acid solution are lead lined.

TO DRILL HOLES IN GLASS.

Make the drill of a good quality of tool steel, grind it the same as for drilling metal, except that the angle of the cutting edges should not be so acute; heat the point of the drill to a dull red heat and quench in metallic mercury; lubricate with oil of turpentine in which camphor has been dissolved.

Much care must be exercised when the point of the drill comes through the opposite side to prevent breaking; the glass should then be reversed and drilled from the other side.

ANOTHER METHOD FOR DRILLING GLASS.

Use a piece of straight copper tubing with outside diameter the size of the hole required, catch this in a drill chuck, and drive at the same speed of a twist drill of corresponding diameter; feed the tube down onto the glass, using a mixture of emery and oil, after a ring has been cut in the glass on one side, turn it over and drill from the opposite side. By using snugly packed sand for a foundation, the glass will not be so likely to crack.

MISCELLANEOUS QUESTIONS FOR ALL BRANCHES REPRESENTED IN THE DECK ARTIFICER BRANCH.

Q. Describe the method of numbering water-tight compartments.

A. See page 79.

Q. Give the names by which the decks on a ship are designated.

A. See page 82.

Q. Describe the draft marks and how they are fitted to ships.

A. See page 83.

Q. Describe the method of reading the draft of a ship.

A. See page 85.

Q. Where are internal draft gages located, and what precautions are necessary to insure accuracy in reading them?

A. See page 85.

Q. Describe in a general way the methods employed for obtaining water-tightness and oil-tightness in joints which are not calked.

A. See page 86.

Q. Describe the proper way to open and close water-tight doors, hatches and airports.

A. See page 90.

Q. What precautions should be taken in the care of water-tight doors, hatches and airports?

A. See page 91.

Q. Describe the method of sounding compartments to detect the presence of water.

A. See page 90.

Q. Describe the operation of the anchor engine and windlass.

A. See page 93.

Q. Give a simple method for getting swivels over the wild-cat.

A. See page 94.

Q. What precautions should be taken while operating the anchor engine to prevent accidents?

A. See page 95.

Q. What precautions should be taken, when fitting up new work or making repairs, to prevent deterioration?

A. Paint all iron or steel, not galvanized, with red lead.

Q. Describe the system of artificial ventilation as used on ships of the Navy.

A. See page 99.

Q. In docking and undocking ships in dry-dock, describe (a) the preparation of the dock; (b) warping the ship into dock; (c) cleaning bottom while in dock; (d) undocking.

A. See page 101.

Q. What inspections and repairs are made to the underwater parts when ships are in dock?

A. See page 105.

Q. Describe a caisson and the method of operating it.

A. See page 106.

Q. Describe a cofferdam for making repairs below the waterline, and the method of constructing one.

A. See page 107.

Q. What important points are to be observed in reading plans?

A. To note the title and legend of the plan, to ascertain if it is the plan required, and also the scale, which is the relative size of the plan to the work.

Q. Name and describe the different views usually shown of an object in a plan.

A. See page 108.

Q. What are cross-sections of a ship, and where are they usually shown?

A. See page 109.

Q. What symbol is used to indicate the midship section of a ship, and what is it called?

A. See page 109.

Q. What is "*hatching*," and for what purpose is it used?

A. See page 109.

Q. Describe the Colomés patent leak stoppers and method of using them.

A. See page 114.

Q. Describe the method of drilling holes in glass.

A. See page 168.

SHIP AND MOTOR-BOAT BELLS.

General.—To be of best quality material and workmanship, free from all defects and blemishes which may affect the serviceability or appearance of the bell.

Composition and Acoustic Properties.—To be cast from a composition consisting of about 78 per cent of best new Lake Superior copper and about 22 per cent of new block tin. The casting to be homogeneous in character and free from internal stresses or strains which may cause the bell to crack. To possess full, clear, round, and far-reaching tones of keys indicated in table forming part of these specifications.

Finish.—To be plain, bright finished on the outside only.

Bell Clapper.—Bell clapper to be of gun-metal composition, with suitable eye in end for attaching lanyard. The supporting eyebolt and nut of motor-boat bell to be of Tobin bronze or gun-metal composition. The clapper of ship's bell to be supported by a bronze lug, which is to be secured by a gun-metal composition or Tobin bronze T-head bolt, nut, and plate washer. Clapper pin to be of Tobin bronze or gun-metal composition.

Lettering.—The letters "U. S. S.," the name of the vessel, and year of completion, which will be specifically stated in each requisition, are to be cast in relief or engraved and filled with black enamel on each bell; the size of letters to be as called for in table forming part of these specifications. All ornamental beading is to be cast in relief on bell. Bells for motor boats and power-propelled vessels to which a name is not to be assigned should have the letters "U. S. N." only.

Plans.—The shape, size, weight, tone, size of letters, and size of ship on which various sizes of bells are to be used are indicated in the illustrations, Figs. 32 and 33, and Table 10.

Tolerance (a).—A variation not exceeding $\frac{1}{4}$ inch will be permitted on all dimensions, except on shanks, where exact dimensions are required for fitting in supports.

Table 10.—Weights, Tones, and Dimensions. (Figures below are approximate.)

Type of vessel.	Approximate weight, pounds; bell only.	Tone key.	Height of letters.	Diameter.														
				A	B	C	D	E	F	G	H	I	J	K	L	M	N	O
			In.	In.	In.	In.	In.	In.	In.	In.	In.	In.	In.	In.	In.	In.	In.	In.
1—Power boats 26 feet to 65 feet, inclusive.	20	"A" flat.	$\frac{7}{8}$	*	*	*	*	*	*	*	*	*	*	*	*	*	*	*
2—Over 65 feet long and up to and including 200 tons displacement.	30	"A" natural.	1	$11\frac{1}{2}$	$7\frac{7}{8}$	$10\frac{1}{2}$	$1\frac{1}{2}$	$\frac{5}{8}$	$4\frac{1}{4}$	$1\frac{1}{2}$	$13\frac{5}{8}$	$6\frac{5}{8}$	$\frac{3}{8}$	$17\frac{5}{8}$	$\frac{1}{4}$	$\frac{3}{16}$	$2\frac{1}{2}$	.81
3—Tugboats over 200 tons displacement.	60	"D" flat.	$1\frac{1}{8}$	$14\frac{1}{4}$	$9\frac{3}{4}$	$12\frac{1}{2}$	2	$\frac{3}{4}$	$4\frac{11}{16}$	$1\frac{3}{4}$	$1\frac{1}{2}$	$8\frac{1}{2}$	$\frac{7}{16}$	$2\frac{1}{8}$	$\frac{5}{8}$	$\frac{1}{4}$	$3\frac{1}{4}$	1.02
4—Torpedo boats over 200 tons and under 700 tons displacement.	60	do	$1\frac{1}{8}$	$14\frac{1}{4}$	$9\frac{3}{4}$	$12\frac{1}{2}$	2	$\frac{3}{4}$	$4\frac{11}{16}$	$1\frac{3}{4}$	$1\frac{1}{2}$	$8\frac{1}{2}$	$\frac{7}{16}$	$2\frac{1}{8}$	$\frac{5}{8}$	$\frac{1}{4}$	$3\frac{1}{4}$	1.02
5—Destroyers over 200 tons and under 700 tons displacement.	60	do	$1\frac{1}{8}$	$14\frac{1}{4}$	$9\frac{3}{4}$	$12\frac{1}{2}$	2	$\frac{3}{4}$	$4\frac{11}{16}$	$1\frac{3}{4}$	$1\frac{1}{2}$	$8\frac{1}{2}$	$\frac{7}{16}$	$2\frac{1}{8}$	$\frac{5}{8}$	$\frac{1}{4}$	$3\frac{1}{4}$	1.02
6—Other power vessels over 200 and under 700 tons displacement.	60	do	$1\frac{1}{8}$	$14\frac{1}{4}$	$9\frac{3}{4}$	$12\frac{1}{2}$	2	$\frac{3}{4}$	$4\frac{11}{16}$	$1\frac{3}{4}$	$1\frac{1}{2}$	$8\frac{1}{2}$	$\frac{7}{16}$	$2\frac{1}{8}$	$\frac{5}{8}$	$\frac{1}{4}$	$3\frac{1}{4}$	1.02
7—Destroyers over 700 tons displacement.	75	"B" natural.	$1\frac{1}{8}$	$15\frac{3}{4}$	$10\frac{7}{8}$	$13\frac{1}{4}$	$2\frac{1}{4}$	$\frac{7}{8}$	5	2	$1\frac{1}{2}$	$9\frac{1}{2}$	$\frac{1}{2}$	$2\frac{1}{4}$	$\frac{3}{4}$	$\frac{1}{4}$	4	1.13
8—Vessels over 700 tons and under 1,000 tons displacement.	75	do	$1\frac{1}{8}$	$15\frac{3}{4}$	$10\frac{7}{8}$	$13\frac{3}{4}$	$2\frac{1}{4}$	$\frac{7}{8}$	5	2	$1\frac{1}{2}$	$9\frac{1}{2}$	$\frac{1}{2}$	$2\frac{1}{4}$	$\frac{3}{4}$	$\frac{1}{4}$	4	1.13
9—Vessels not specifically referred to in the foregoing.	75	do	$1\frac{1}{8}$	$15\frac{3}{4}$	$10\frac{7}{8}$	$13\frac{3}{4}$	$2\frac{1}{4}$	$\frac{7}{8}$	5	2	$1\frac{1}{2}$	$9\frac{1}{2}$	$\frac{1}{2}$	$2\frac{1}{4}$	$\frac{3}{4}$	$\frac{1}{4}$	4	1.13
A—1,000 tons, to and including 2,000 tons displacement.	200	"G" natural.	$1\frac{1}{4}$	$21\frac{1}{4}$	$14\frac{3}{4}$	$18\frac{3}{4}$	$3\frac{1}{4}$	1	$6\frac{1}{2}$	$2\frac{1}{2}$	2	$13\frac{5}{8}$	$\frac{5}{8}$	$3\frac{1}{2}$	$\frac{7}{8}$	$\frac{3}{8}$	5	1.53
B—More than 2,000 tons displacement, to and including 6,000 tons.	300	"E" natural.	$1\frac{1}{4}$	$24\frac{1}{2}$	$16\frac{3}{4}$	$21\frac{1}{4}$	$3\frac{9}{16}$	1	$7\frac{1}{2}$	3	$2\frac{3}{8}$	$15\frac{7}{8}$	$\frac{5}{8}$	$3\frac{3}{4}$	$\frac{7}{8}$	$\frac{7}{16}$	$5\frac{1}{2}$	1.75
C—More than 6,000 tons, to and including 12,000 tons displacement.	600	"B" natural.	$1\frac{1}{2}$	31	$21\frac{3}{8}$	$27\frac{1}{8}$	$4\frac{5}{8}$	$1\frac{1}{2}$	$9\frac{1}{4}$	$3\frac{1}{2}$	$2\frac{7}{8}$	19	$\frac{7}{8}$	$4\frac{1}{2}$	$1\frac{1}{4}$	$\frac{1}{2}$	7	2.20
D—More than 12,000 tons displacement.	800	"B" flat.	$1\frac{1}{2}$	34	$23\frac{3}{8}$	$29\frac{3}{4}$	5	$1\frac{3}{4}$	$10\frac{3}{8}$	4	$3\frac{1}{8}$	$20\frac{3}{8}$	1	5	$1\frac{1}{2}$	$9\frac{1}{8}$	8	2.42
E—Fuel ships, transports, supply ships, repair ships and hospital ships.	300	"E" natural.	$1\frac{1}{4}$	$24\frac{1}{2}$	$16\frac{3}{4}$	$21\frac{1}{4}$	$3\frac{9}{16}$	1	$7\frac{1}{2}$	3	$2\frac{3}{8}$	$15\frac{7}{8}$	$\frac{5}{8}$	$3\frac{3}{4}$	$\frac{7}{8}$	$\frac{7}{16}$	$5\frac{1}{2}$	1.75

*See detail drawing.

(b) The following variations will be permitted in the approximate weight of bell given in table, which does not include the weight of clapper and fittings:

Not more than 5 per cent above or below weight given for 20-, 30- and 60-pound bells.

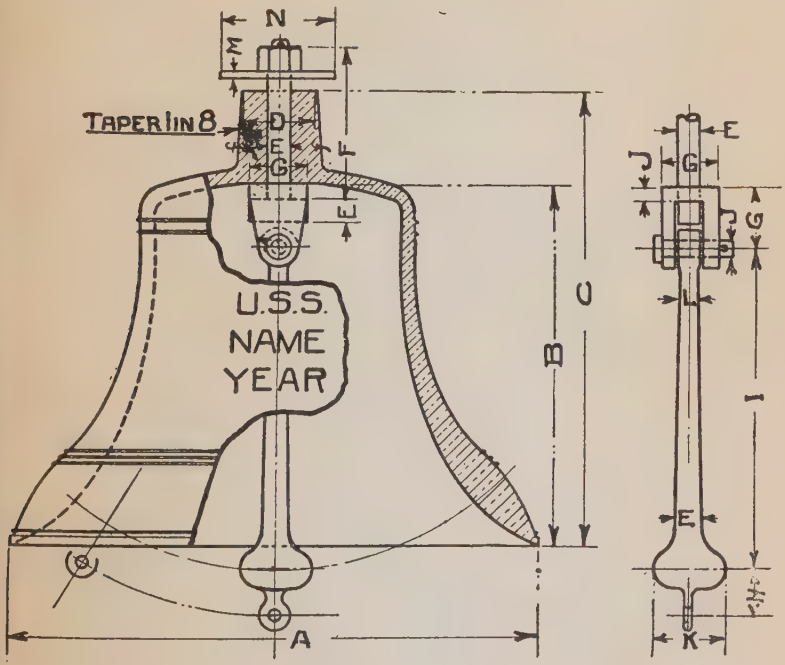

FIG. 32.—Ship Bell.

Not more than 4 per cent above or below weight given for 75-pound bells.

Not more than 3 per cent above or below weight given for 200- and 300-pound bells.

Not more than 2 per cent above or below weight given for 600- and 800-pound bells.

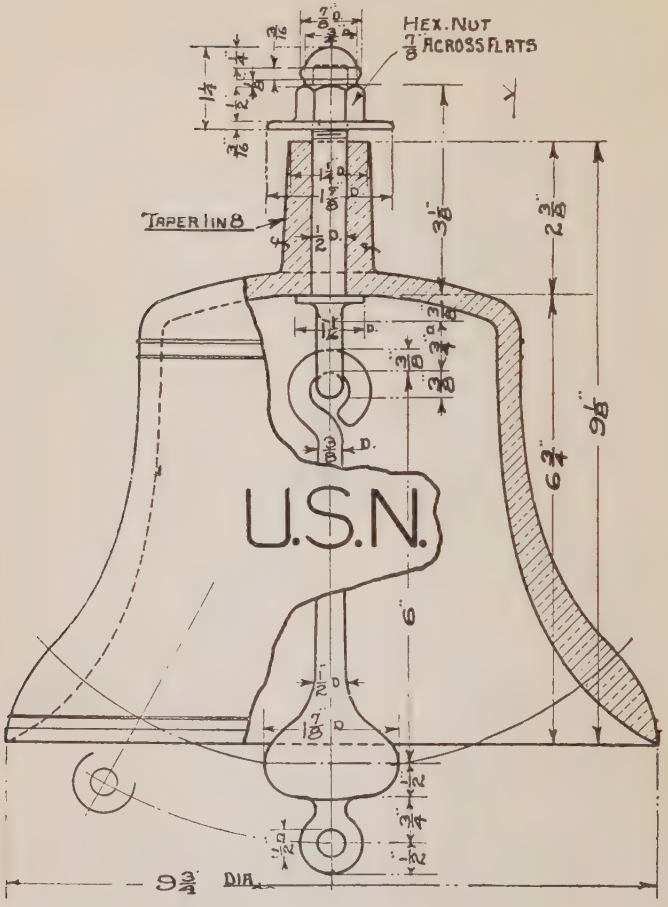

FIG. 33.—Motor Boat Bell.

Plimsoll Mark.

A mark painted on the port side of British seagoing merchant steam vessels to indicate the limit of submergence allowed by law; it is so-called from Samuel Plimsoll, by whose efforts the Act of Parliament to prevent overloading was procured.

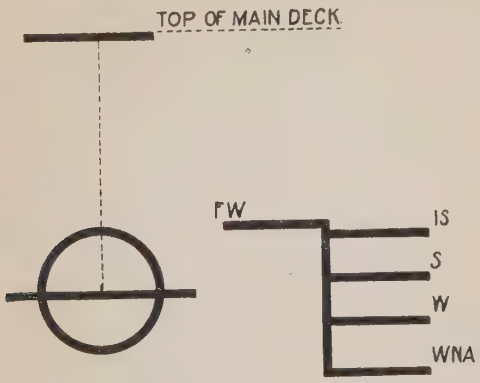

FIG. 34.—Plimsoll Mark.

Key to Plimsoll Mark.

FW....Maximum draft, fresh water.
IS.....Indian Ocean, summer season (salt water).
WNA..North Atlantic Ocean, winter season.
S.....Summer } In waters other than North Atlantic
W.....Winter } and Indian oceans (salt water).

Upper edge of horizontal line passing through center of disk is maximum draft (salt water) in other than North Atlantic and Indian oceans.

SOME NOTES ON THE TONNAGE OF MERCHANT CARGO SHIPS.

Gross and net tonnage are measured in cubic feet of enclosed space, a ton being reckoned as 100 cubic feet of space.

Gross Tonnage is the tons (100 cubic feet space) of all enclosed spaces on the ship, including engine room, fire rooms, staterooms, storerooms, etc.

Net Tonnage is the tons (100 cubic feet space) in such places as are available and suitable for carrying cargo.

Part of the enclosed spaces on ships are not supposed to be used for carrying cargo, and are therefore deducted from the gross tonnage; the engine space, living quarters, boatswain's storeroom, etc., are such spaces; steward's storerooms, refrigerating rooms and staterooms not occupied are not deducted, because they can be used for stowage of cargo.

Displacement and deadweight carrying capacity are measured in long tons (2240 pounds).

Displacement is the total weight in long tons (2240 pounds) of the entire ship with everything on board.

Deadweight Carrying Capacity is the number of long tons (2240 pounds) the ship will carry from light draft to full-load draft.

On a capacity plan, there is usually made for the owners of the ship, what is known as a "deadweight scale." It is made on a vertical scale alongside the displacement scale, the zero of the "deadweight scale" being opposite the light-load draft figure, and giving the tons (2240 pounds deadweight taken on board) opposite each draft up to the full-load draft; the maximum deadweight is opposite the full-load draft; this, of course, amounts to the displacement at full-load draft minus the displacement at light-load draft.

Coal occupies 43 cubic feet to the ton, package freight about 40 cubic feet to the ton and salt water 35 cubic feet to the ton. A metric ton is 2204 pounds, which is the weight of a cubic meter of fresh water.

The unit of measurement of 100 cubic feet of space per ton for gross and net tonnage was adopted, as a standard of measurement for ships, by Great Britain in 1854; this standard was also adopted by the United States in 1864, and is now universally used.

CHAPTER III.

INSTRUCTIONS FOR CARPENTERS' MATES AND SHIPWRIGHTS.

The duties of carpenters' mates and shipwrights aboard ships are so variable that no attempt will be made to cover all classes of work they are likely to encounter. The care and maintenance of the ship's boats and wood decks are among their most important duties, and are to be the principal subjects of this chapter.

SMALL BOATS OF THE NAVY.

Extracts from Boat Instructions, 1914, issued by the Bureau of Construction and Repair.

General Description.

The boats used by the United States Navy are classified as follows:

Power Boats.	Pulling Boats.
Steamers.	Sailing launches.
Motor boats.	Cutters.
Motor whaleboats.	Racing cutters.
Motor sailing launches.	Whaleboats.
Motor dories.	Dinghies.
Electric cutters.	Wherries.
	Dories.
	Punts.
	Life rafts.

Steamers and motor boats assigned for the use of flag officers are known as "steam barges" and "motor barges," respectively.

The motor whaleboat is not an ordinary whaleboat fitted with a motor, but is a full-bodied, double-ended motor boat.

The size of ships' boats is indicated by their length in feet. For example, a 28-foot cutter is a cutter 28 feet overall length. A few inches longer or shorter than the nearest even number of feet is to be ignored when stating the length, for identification, in connection with the registry number.

The following is the length (in feet) of the boats now ordinarily supplied to naval vessels:

Steamers, 50, 40 and 30.
Motor boats, 40 and 35, and special sizes.
Motor dories, 21.
Motor and plain sailing launches, 50, 40, 36, 33, 30 and 24.
Cutters, 30, 28, 26 and 24.
Racing cutters, 31.
Whaleboats, 30, 28, 24 and 20.
Dinghies, 20 and 16.
Wherries, 14 and 12.
Dories, 17.
Punts, 14, 12 and 10.
Life rafts, 16.

For a general description of boats, their outfits and their uses, see "The Deck and Boat Book of the United States Navy," edition of 1914.

Parts Belonging to the Hull.

The following portable parts—considered to be parts of the hull (not "outfit")—will be included in the invoice price of the hull and will always be issued with and turned in with the hull to which originally fitted. This list is intended to cover all portable parts which need to be fitted to the boat.

All of these parts will be actually tried in place on the boat before it is first issued:

Awnings and awning stanchions.
Backboards.
Bags, awning and sail.

Bell and bell bracket.
Canopy covers and weather cloths.
Canopy frames.
Chain-hoisting slings.
Engine covers (metal or wood).
Engine covers, canvas.
Flagstaffs.
Hand bilge pumps.
Light boxes.
Portable gratings or shutters.
Rowlocks or thole pins with lanyards.
Rudders.
Sails, rigging, blocks and sail cover.
Seat cushions and covers.
Slings, wire rope (hoisting).
Spars.
Steering ropes, wheels, drums, tillers, yokes and quadrant fitted to rudder head.
Stretchers.
Thwarts, forward platforms, etc.
Tin case containing set of boat plans and a copy of the pilot rules (to be stowed in rack under stern seat or other safe location).
Towing posts.
Ventilator cowls.

When a boat is turned in for repairs or for any other reason, if it is found that there is not a set of plans with the boat, a set of plans in a tin case should be furnished when the boat is reissued to the same or another ship.

Outfit (Construction and Repair).

The following items are considered "outfit" (not part of hull) and are not to be furnished with a boat unless specifically authorized by the bureau.

Items of "outfit" are part of the ship's equipage and are to be retained on board when a boat is turned into store and replaced by a similar boat. When a boat is turned in and is not to be replaced by a similar boat, its outfit should also be turned in. In case a boat is turned in and replaced by a dissimilar boat at the same yard, the general storekeeper should return with the new boat such items turned in with the other boat as are suitable for the new one. The returned item should be eliminated from the invoices so as not to involve a double charge to the appropriation.

Anchors and anchor chains or lines.

Boat buckets.

Boat chests, with standard contents, except safety matches which are under the cognizance of the Bureau of Supplies and Accounts and sounding leads and lines which are under the cognizance of the Bureau of Navigation.

Boat covers.

Boat hooks.

Flags.

Fire extinguishers.

Grapnels and grapnel lines.

Grommets for thole pins.

Oars.

Painters.

Ropes, yoke.

Running lights (oil).

Side fenders.

Trailing lines.

Water breakers and stands.

Wire-rope hoisting slings are to be furnished only for boats which are handled by boat cranes or derrick booms. On vessels having boat cranes, one set of hoisting slings will be furnished for each whaleboat which is handled by davits, so that it may be picked up by the boat cranes.

GENERAL NOTES RELATIVE TO BOATS AND OUTFITS.

Manufacture of Outfit.—When new boats are built, such articles of outfit under this bureau as are commonly carried in stock and of which there are a sufficient number available on hand to meet current requirements shall not be set aside nor manufactured for such new boats, but will be provided from stock when the boats are issued.

Boat Chests.—Boat chests are not to be included in outfits of boats issued to torpedo craft or naval militia.

Water Breakers.—Water breakers and stands are not to be included in outfits of boats issued to naval militia organizations on strictly fresh water. On the Mississippi River, fresh water will be considered as beginning above Memphis.

Boat Covers.—Boat covers will not be furnished for whaleboats which are used as lifeboats nor with steamers or motor boats except in cases where they are specifically called for by the allowance list. Individual boat covers will not be furnished for boats which are nested, as the cover for the nest of boats will answer the purpose.

Boat Cushions.—Power boats, except motor sailing launches, will be furnished with one set of boat cushions and two sets of covers for the seats in the after cockpit. These cushions will be filled with kapok so that they may be used as life preservers.

Racing Cutters.—Racing cutters are issued to battleships and armored cruisers only, unless specially authorized by the department. Only one will be issued to each vessel. They will not be issued to the naval militia. No alterations whatever affecting the design or weight of standard racing cutters or other boats shall be made except upon specific authority of the bureau.

Sails for Power Boats.—Sails will not be issued with power boats or racing cutters. Motor sailing launches, however, being considered primarily pulling boats will have sails and all of the other outfit of plain sailing launches, and in addition

will have the equipment (running lights, whistle, fire extinguisher, etc.) required by the motor-boat law.

Lug Rig for Whaleboats and Cutters.—The standing lug rig for whaleboats and cutters has been adopted in lieu of the former standard sliding gunter rig, and the issue of complete sliding gunter rigs has been discontinued.

In view of the above, no more fittings should be manufactured for use in connection with the sliding gunter rigs, except for minor repairs to rigs in good condition. Requisitions for whaleboat and cutter sails, rigging and spars, and spar fittings should state whether the boat is fitted with a sliding gunter or a lug rig.

Sliding gunter rigs now in service will be replaced by lug rigs only when the present rigs are worn out.

Whaleboats and cutters now in store which are fitted to take sliding gunter rigs should, when they are to be issued with outfits complete, be altered so as to be suitable for the new lug rigs.

Replacement of Boat Equipment.—The invoice price of a boat (without outfit), when issued in accordance with the latest instructions, includes the cost of all of the portable parts of the hull.

The "Classification of Navy Stores and Material," issued by the Bureau of Supplies and Accounts, shows the division between title B and title C of the portable articles referred to.

When it is desired to replace such articles as are under title C, they should be obtained on requisition and replaced by the ship's force, the damaged articles being disposed of without survey in the usual manner pertaining to articles classified as title C.

When it becomes necessary to replace damaged title B portable parts belonging to the hull, as for example, a mast, same should be obtained by means of a letter requesting repairs to the boat. The furnishing of such portable articles will be done

by the navy yard on a title P job order and the articles will not be invoiced to the vessel.

As items classified as boat "outfit" are invoiced to the vessel individually, such title B items of outfit as are required to be replaced should be surveyed and obtained on requisition.

Fire Extinguishers for Motor Boats.—Not less than two carbon tetra-chloride type fire extinguishers should at all times be carried in motor sailing launches and motor dories, and not less than four should at all times be carried in other motor boats.

In the case of motor boats having one or more cockpits and separate engine compartments, at least one carbon tetra-chloride fire extinguisher should at all times be located in each cockpit and two in the machinery compartment.

The usual bucket of dry sand, or sand and salt mixed, may also be carried. On account, however, of the damage which may be done to the machinery by throwing sand on same, it should be used in the machinery compartment only when considered absolutely necessary in case the fire extinguishers are ineffective.

Sails and Spars for Small Boats on Torpedo-Boats and Destroyers.—Referring to the statement contained in paragraph 25 (7), page 15, of the Deck and Boat Book of the United States Navy, 1914, that spars, sails and rigging are to be furnished for only one boat on destroyers or torpedo-boats, it has been decided that the one boat assigned to a torpedo-boat or destroyer to be furnished with sails, shall be a whaleboat.

Care will, therefore, be exercised not to issue spars, sails and rigging with cutters or 24-foot motor sailing launches issued to a torpedo-boat or destroyer; and spars, sails and rigging will not be issued with a whaleboat if there is already on board a whaleboat so fitted.

Requests for whaleboats from torpedo-boats or destroyers having more than one whaleboat, should therefore include a statement as to whether or not sails, spars and rigging are

required with a new boat, in order to comply with the foregoing.

Loan of Boats to Contractors for Stowage Purposes.—The fitting of boat-stowage arrangements from templates having proven unsatisfactory, boats to be stowed in chocks will be loaned to contractors for the purpose, the boats to be returned to the navy yard as soon as they have served their purpose. The cost of shipment will be borne by the government.

Only one boat of each type and size will be furnished for stowage purposes on any particular vessel.

Contractors will be held responsible for returning boats in as good condition as when received.

Portable parts and outfits shall not be shipped with the boats, but forwarded to and stored at the navy yard at which the vessel is to be fitted out after being commissioned, to be subsequently delivered to the vessel along with the boats and such outfit as has not previously been delivered.

Storage arrangements (chocks, gripes, etc.) for boats stowed inside of other boats will be furnished by the government, and commandants of navy yards to which new vessels are to be delivered should make arrangements in advance to have such stowage furnished immediately upon the arrival of the vessel. Detailed information in regard to stowage of boats inside of others should be obtained in advance by the commandant from the superintending constructor.

Location of Stars on the Bows of Flag Officers' Barges.—In the case of a barge assigned to a rear admiral, two brass stars shall be fitted in a vertical line about 18 inches from the stem and with the upper star about 6 inches below the beading. For indicating the rank of admiral or vice admiral, four stars or three stars shall be placed in the same general location, arranged as on the flags of these officers.

Neither the initial letter of the vessel on which the barge is carried nor the design of admiral's, vice admiral's, or rear admiral's flag will be used to mark barges.

Standard Bow Weather Cloths for Steamers.—The following is quoted from Specifications for Weather Cloths for Steamers:

"The bow piece to have three circular peepholes 12 inches in diameter with a flap or curtain on the outside for the helmsman, one amidship, and one on either bow, to be symmetrically placed and in such position as to give a view from at least two points abaft the beam to at least broad on the bow."

Requisitions Not to be Submitted for Boats.—When a boat is desired, it should not be included in a requisition, but should be requested by a letter to the Bureau of Construction and Repair. When the vessel is (or will be in the near future) at a navy yard the letter should be sent via the commandant, or industrial manager.

Requisitions for Boat Parts.—When requisitions are submitted for items of outfit or spare parts for boats the size and name of the boat, its registry number, and the plan number shown on the label plate should always be specified, in order that articles of the proper design may be selected by the navy yard.

Boat Plan Numbers in Allowance Lists.—Hereafter allowance lists for new vessels will state the bureau plan numbers of the boats which will be issued, and general storekeepers should take particular care to see that items of boat outfit are suitable for the design shown on the plans indicated instead of simply furnishing an item which is in store and labeled as being suitable for a particular size and type of boat.

Trial of Outfit—Boat Chest Contents.—For vessels going into commission, the yard issuing a boat and outfit should actually try all outfit in the boats to see that all parts fit and that the boat and outfit are in a satisfactory working condition. For such vessels, boat chests should be issued with their standard contents complete, as specified on the Bureau of Construction and Repair's standard plan of boat chests, in

order to insure that the articles are on hand and properly stowed; when a boat is to be issued with outfit complete, the boat chest should contain the standard contents. This is not intended to prevent the invoicing of items under the cognizance of the several bureaus separately.

Manufacture and Tagging of Boat Parts.—Boat parts and outfits will hereafter be manufactured from the standard boat plan series consisting at present of approximately 85 sheets. General arrangement plans will call for parts by boat detail sheet and piece numbers.

In order to simplify the issuing of such parts, each piece when manufactured should be tagged with the boat detail sheet and piece numbers and the names and lengths of the boats for which suitable.

As a matter of economy, in order to utilize outfit and boat parts now in store not in accordance with the latest standard plans, each piece should be compared with the new standards and those which could be substituted for certain boats should be so marked and a record should be made to issue same before the newer material is utilized; for example, the standard plans now call for round rope sennet boat fenders. The reason why these were adopted was partly because they were cheaper than the leather, hair-stuffed boat fenders. Therefore the leather boat fenders should be marked to be issued as a substitute for the fenders called for by the standard plans until they are all used up.

Boats for Marine Corps, Naval Militia, etc.—The construction, repair and assignment of all boats is under the cognizance of the Bureau of Construction and Repair. When assigned to the marine corps, naval militia, yard use, etc., the same appropriations are to be debited as when a boat is issued to a ship in commission. When, however, boats are transferred to government departments other than branches of the Navy Department, such as the coast guard, Panama Canal, etc., the transfer will be effected by transfer of appropriation.

Loan of Boats to Military Schools.—The conditions under which boats may be loaned to military schools are as follows (Rev. Stat., Vol. 31, Ch. 863, amended by Rev. Stat., Vol. 34, Ch. 3612, further amended by the naval act of June 24, 1910):

"That the President be, and is hereby, authorized, upon the application of the governor of any state having seacoast line or bordering on one or more of the Great Lakes, to direct the Secretary of the Navy to furnish to one well-established military school in that state, desiring to afford its cadets instructions in elementary seamanship, one fully equipped man-of-war's cutter for every 25 cadets in actual attendance, and such other equipment as may be spared and be deemed adequate for instruction in elementary seamanship: *Provided*, That the said school shall have adequate facilities for cutter drill, and shall have in actual attendance at least 75 cadets over 15 years of age in uniform receiving military instruction and quartered in barracks under military regulation, and shall have the capacity to quarter and educate at the same time 150 cadets: *And provided further*, That the Secretary of the Navy shall require a bond in each case, in double the value of the property, for the care and safe-keeping thereof and for the return of same when required."

DIVISION OF COGNIZANCE OF PARTS OF STEAMERS AND MOTOR BOATS.

Bureau of Construction and Repair.

Castings to hold bearings where propeller shaft pierces hull.
Coal bunkers.
Fire extinguishers.
Fog bell.
Fuel tanks.
Hand bilge pumps.
Hull and outfit in general.
Machinery foundations.

Metal or wood engine covers.
Oil running lights.
Propeller strut.
Rudder skeg.
Running light boxes and supports.
Steering gear.
Tool box in motor sailing launches.
Voice tubes.

Bureau of Steam Engineering.

Bearing in propeller strut.
Electric lights.
Electric and other starting devices.
Feed tanks (including those under boilers).
Piping, valves, etc., necessary for the working of propelling machinery.
Portable flooring around propelling machinery.
Propelling machinery with shafting, bearings and propeller.
Pumps worked by power other than hand.
Tool box in steamers and motor boats.
Whistle, air tank and piping or electric horn.

Bureau of Navigation.

Clocks.
Compass.
Foghorn.
Navigation instruments.
Sounding leads and lines.

Cage Stand Circles.—Cage stand circles for boats are under the cognizance of the Bureau of Ordnance, and their cost is chargeable to an appropriation under that bureau; their installation is chargeable to an appropriation under the cognizance of the Bureau of Construction and Repair.

Electric Cutters.—Electric cutters, including propulsion machinery, are under the cognizance of the Bureau of Construction and Repair.

BUILDING OR PURCHASE OF MOTOR BOATS AND STEAMERS.

When motor boats or steamers are built in navy yards, the propelling machinery will be built or purchased under the cognizance of the Bureau of Steam Engineering, but will be subject to the requirements of the Bureau of Construction and Repair as to size, horsepower and arrangement, so as to produce the requisite speed; to conform in other respects to the general design of the boat as determined by the Bureau of Construction and Repair. When motor boats or steamers, including hull and machinery complete, are purchased from outside manufacturers, joint requisition therefor will be submitted by the Bureaus of Construction and Repair and Steam Engineering, each bureau bearing the proportion of total cost assignable to hull and machinery, respectively.

MANUFACTURE.

Boats should not be manufactured or purchased except upon specific authority from the Bureau of Construction and Repair.

An approved allowance list should not be considered as authority for the manufacture or assignment of boats. The bureau will take the necessary action to provide boats for individual vessels.

When boats are needed for assignment to vessels to replace others condemned by survey, appropriate recommendations should be submitted by the yard concerned.

Boats should be built of well-seasoned wood. Workmanship should be first class. It should be borne in mind that, except in case of a few special boats such as flag officers' barges, navy boats are working boats and a fancy finish is not required. Especial care should be taken to provide the maximum struc-

tural strength that the specified material will allow. Butts of planking should be carefully shifted.

The bureau desires to encourage competition between the several boat-building yards, but such competition should not be at the expense of service efficiency.

Certain methods of cheapening construction of standard boats which appear economical so far as first cost is concerned have proved much more expensive when upkeep is considered, and the bureau does not approve of such practices. No modifications whatsoever from the plans and specifications will be allowed. The new boat plans specify all details. In case difficulties or obvious errors are encountered, the matter should be immediately brought to the attention of the bureau.

While there will always be a legitimate difference of opinion as to the design of boats most suitable for the service, and obviously all suggestions cannot be adopted, the bureau is glad to receive any suggestions for improvements, and suggestions are always given careful consideration.

If plans are departed from without reference to the bureau, even for what are believed to be good reasons, the bureau is not in a position to make the necessary improvements for the general benefit of the service. Departures from standard plans or instructions which are considered of minor importance by the personnel of the yard or shop making same, frequently result in difficulties, and occasionally result in serious accidents.

An illustration is given of what the yard considered a minor departure, but which resulted in unsatisfactory results and gave rise to just criticism:

The *Patterson* was furnished with a set of spruce oars for a 20-foot whaleboat. These oars were standard, except as regards material, which should have been ash, and several very small deviations from standard measurements. The whaleboat so fitted finished first in one race and second in the other two of a total of three races, but was disqualified because the oars used were not strictly standard.

This illustration is given simply to show that an apparent trifle may be the cause of very unsatisfactory results.

Yards desiring to use special woods not called for by the boat plans on account of local market conditions should obtain authority from the bureau before doing so.

In order to have racing cutters exact duplicates of each other, they will be built only at the navy yard, New York, for the east coast, and at the navy yard, Mare Island, for the west coast.

REFERENCES ON PLANS TO LEAFLET SPECIFICATIONS.

In the case of items required for boats which are covered by Navy Department specifications, boat plans will simply refer to the fact that there are such specifications without stating their number and date, it being the bureau's intention to always have the latest edition used.

INSTRUCTIONS TO OBVIATE DELAYS IN SHIPMENT OF BOATS.

Several times recently when the bureau has issued instructions to have boats prepared for shipment which were listed in boat reports as being available for issue, the boats were not shipped promptly, repairs being necessary or having been held on account of the non-receipt of spars, awning stanchions, or other fittings, which were being obtained from other yards.

Steps should therefore be taken to see that every boat listed on the boat report as a new or repaired boat in store is actually ready for issue in all respects (except final painting and puttying), including the fitting of all portable articles which are considered as being part of the hull.

When there is prospect of delay in the shipment of a boat, due to either major or minor portions thereof not being on hand, the matter should be immediately brought to the attention of the bureau, the facts in detail being stated. This applies also to the shipment of motor sailing launches where

either the motor or any part of the machinery is missing, as it might be desirable to ship the hull and forward the machinery later for installation by the ship's force.

REPAIRS.

The bureau desires, in general, when boats are turned in for repairs, that this work shall be promptly taken in hand and the boats made ready for reissue without delay. These instructions are not intended to interfere with the regular progress of new work.

Repairs to standard boats shall not be undertaken in advance of the bureau's approval when the estimated cost of repairs to the hull proper (exclusive of repairs to portable portions invoiced as part of the hull) exceeds 25 per cent of the current cost of a new boat of the same type (this cost to include both the cost of the hull proper and the portable portions invoiced as part of same).

When repairs are recommended to boats where the estimated cost exceeds 25 per cent of the cost of a new boat, a detail report should be submitted as to the condition of the boat and the reasons for recommending the repairs.

As a usual practice, repairs up to 50 per cent of the cost of a new boat will be authorized, provided that the age and condition of the boat are such that the repairs contemplated will make it practically equal to a new boat, and further provided that it is not of an obsolete type.

BOATS FOR NAVAL MILITIA AND BOY SCOUTS.

It has been decided to maintain a stock of three classes of boats at the principal navy yards as follows:

(a) Boats suitable for issue to regular service ships.

(b) Old boats which are not suitable for issue to regular service ships, but which are suitable for yard use or naval militia organizations, where the boats will not have to be frequently hoisted.

(c) Boats which would ordinarily be condemned, but which, with minor repairs, not to exceed $200 per boat, could be made suitable for issue to Boy Scout organizations.

The department (Bu. C. and R., File No. 4-34) has authorized the maintaining of a suitable supply of such boats as are covered under class (c) for loan without bond to Boy Scout organizations. Sails, spars, rigging, and all other portable parts of the hull which are available should be issued with the boats. The only "outfit" to be furnished will be oars, boat hooks and painters.

The types and sizes of condemned boats which should be reserved for Boy Scouts, when opportunity offers, are as follows:

16- and 20-foot dinghies.

24-, 26-, 28- and 30-foot cutters.

31-foot racing cutters.

24-, 28- and 30-foot whaleboats.

30-foot barges.

The types and sizes of boats considered most suitable for naval militia organizations which do not have the use of naval vessels include those mentioned in the next preceding paragraph, and also steamers up to and including 40-foot lengths. The department, however, has directed that racing cutters be not issued to the naval militia.

When boats are surveyed for final disposition, consideration should therefore be given to the possibility of placing them in a sufficiently good condition for the above-mentioned special uses and recommendation made accordingly that the boats can be so utilized.

These surveys should either contain estimates for such repairs or should state the condition of the boat is such as to not warrant its further use by the yard, naval militia, or Boy Scouts, or that a sufficient number of such boats have already been reserved for these purposes.

On account of the storage space to be occupied by such boats the bureau does not desire to have a large stock accumulated, and boats which have been reserved for Boy Scouts should be condemned for sale if the stock becomes unduly large.

Boats other than those mentioned above as being suitable for the naval militia should not be recommended to be reserved for yard use, unless they are actually so needed at the time or there is prospect of their being needed in the near future.

Repairs to boats reserved for Boy Scouts should not be made until the issue of an individual boat is authorized.

When scout masters visit the yard and select boats, they should be told that the boats cannot be held for them unless they make immediate application; also that it would expedite matters if their letters of application be forwarded via the commandant. They should also be told that if the boats are to be shipped the cost of shipment will be chargeable to the Boy Scouts.

Upon receipt, such applications should be forwarded to the bureau as soon as practicable, together with statement of cost to put the boats in suitable condition for such loans and as to whether the boats are to be delivered at the yard or to be shipped.

Applications for boats received in the bureau without having been routed via the commandant or industrial manager will be referred to the yard for a statement as to whether boats are available.

AIR-BUOYANCY TANKS.

It has been frequently found that air-buoyancy tanks in steamers have been cut in order to utilize the space for storage, thereby rendering them useless as air tanks.

In order to make this cutting impossible, the size of the shutters in the staving in the way of the tanks, for access to the steering ropes, should be of just sufficient size to give hand access over the tops of the tanks.

Air-buoyancy tanks in both steamers and whaleboats should be frequently examined and when found cut should be immediately repaired.

LABEL PLATES.

All boats in service should, in accordance with previous instructions, have brass label plates showing their capacity, etc. The carrying capacities shown in the table on page 196 are for boats which have been designed to replace the designs contained in the publication Boats of the U. S. Navy (Hichborn), edition of 1900, and should not, unless applicable, be made to apply to the old boats. New boat plans will specify the carrying capacity for that particular design.

Boat label plates will be of sheet brass about 6 by 2¼ inches, with engraved letters about $\frac{5}{16}$ inch high, filled with black sealing wax. The data on the label plates will be as follows, the exact data to suit the particular boat:

33-foot motor sailing launch.
Boat number 1196
Maximum capacity ..... 50 men
Navy Yard, Norfolk, January, 1913.
C. & R. plan number.....30574

The C. and R. plan number will be the general arrangement plan from which the boat was built. In case the inboard profile, deck, and sections are not all on the same plan, the plan number of the inboard profile should be used. The general arrangement or inboard profile plan will contain a statement of the other plans of the set.

For special boat, the label plate data will be obtained from the bureau.

Table 11.—Carrying Capacity and Abandon Ship Water.

Boat name.	Carrying capacity.	Abandon ship water; battleships and armored cruisers.	Abandon ship water, all other ships.	Breakers belonging to boat.	Additional 8-gallon breakers for abandon ship (except for B. S. and A. C.).
	Men.	*Gals.*	*Gals.*		
50-foot steamer	44	22	66	2 8-gal. / 1 5-gal.	6
40-foot steamer	29	15	44	2 8-gal.	4
30-foot steamer	25	13	38	1 8-gal. / 1 5-gal.	3
35-foot motor boat	27	14	41	2 8-gal.	3
30-foot motor whaleboat	31	16	47	2 8-gal.	4
21-foot motor dory	10	5	15	1 5-gal.	1
50-foot motor sailing launch	190	95	285	12 8-gal.	23
40-foot motor sailing launch	90	45	135	6 8-gal.	11
40-foot sailing launch	102	51	153	6 8-gal.	13
36-foot motor sailing launch	70	35	105	5 8-gal.	8
36-foot sailing launch	77	39	116	5 8-gal.	9
33-foot motor sailing launch	50	25	75	4 8-gal.	5
33-foot sailing launch	58	29	87	4 8-gal.	7
30-foot motor sailing launch	40	20	60	3 8-gal.	5
30-foot sailing launch	45	23	68	3 8-gal.	6
24-foot motor sailing launch	19	10	29	2 5-gal.	2
31-foot racing cutter	18	9	27	1 8-gal.	3
30-foot cutter	40	20	60	2 8-gal. / 1 5-gal.	5
28-foot cutter	33	17	50	2 8-gal.	4
26-foot cutter	27	14	41	1 8-gal. / 1 5-gal.	3
24-foot cutter	19	10	29	2 5-gal.	2
30-foot whaleboat	40	20	60	1 5-gal. / 2 8-gal.	5
28-foot whaleboat	32	16	48	2 8-gal.	4
24-foot whaleboat	23	12	35	1 8-gal. / 1 5-gal.	3
20-foot whaleboat	16	8	24	2 5-gal.	2
20-foot dinghy	14	7	21	2 5-gal.	1
16-foot dinghy	10	5	15	1 5-gal.	1
17-foot dory	5	3	8	1 3-gal.	1
14-foot wherry	5	3	8	1 3-gal.	1
12-foot wherry	4	2	6	1 3-gal.	1

NOTE.—Extra water breakers for abandon ship not required for battleships and armored cruisers.

When a sailing launch is converted into a motor sailing launch, the sailing launch label plate should be removed and replaced by a label plate for a motor sailing launch.

The maximum number of men indicated on the label plate of a boat should not be exceeded under any circumstances and

should be reduced by the officer in charge when conditions are such as to indicate that the maximum number of men cannot be carried with safety.

The commandants or industrial managers of navy yards and stations will issue instructions to have label plates placed on all boats in store or yard use and on vessels at the yards, and to examine the boats of all vessels arriving at the yards and have standard label plates placed thereon in cases where this has not already been done.

DETERMINATION OF BOAT CAPACITIES.

The carrying capacity of a pulling boat is determined by calculating the internal volume of the boat in cubic feet and allowing 10 cubic feet of such volume for each man carried.

In the case of a power boat, the above-determined capacity shall be decreased by the number of men which would equal the weight of the machinery.

Each man will be assumed to be wearing a life jacket and the weight to be allowed for each man so equipped will be 165 pounds.

In determining the capacity of a new type of boat, the boat shall actually be tested in the water with its full outfit, including abandon ship breakers and provisions aboard (or equivalents), to see that there is sufficient room, freeboard, and stability to safely carry the number of men allowed; if not, the number of men allowed should be reduced to a safe number.

The bureau will in all cases designate the carrying capacity of boats.

The volume of the boats named in Table 11 were determined by the following rule:

(United States Steamboat-Inspection Service): Measure the length and breadth outside of the planking or plating, and the depth inside at the place of minimum depth. The product of these dimensions multiplied by 0.6 resulting in the nearest whole number shall be deemed the capacity in cubic feet.

As this is an empirical rule for determining the volume of an open boat based on an assumed coefficient of fineness, the following more accurate rule will be used hereafter, and, when opportunity offers, the capacities of standard boats will be redetermined by the bureau:

Cubic Capacity of Boats.

The cubic capacity of a boat shall be determined by Stirling's (Simpson's) rule or by any other method giving the same degree of accuracy. The capacity of a square-sterned boat shall be calculated as if the boat had a pointed stern.

For example, the capacity in cubic feet of a boat, calculated by the aid of Stirling's rule, may be considered as given by the following formula:

$$\text{Capacity} = \frac{l}{12}\ (4A + 2B + 4C),$$

l being the *length* of the boat in feet from the inside of the planking or plating at the stem to the corresponding point at the stern post; in the case of a boat with a square stern the length is measured to the inside of the transom.

A, B, C denote, respectively, the *areas of the cross-sections* at the quarter length forward, amidships, and the quarter length aft, which correspond to the three points obtained by dividing l into four equal parts. (The areas corresponding to the two ends of the boat are considered negligible.)

The areas A, B, C shall be deemed to be given in square feet by the successive application of the following formula to each of the three cross-sections:

$$\text{Area} = \frac{h}{12}\ (a + 4b + 2c + 4d + e),$$

h being the *depth* measured in feet inside the planking or plating from the keel to the level of the gunwale, or, in certain cases, to a lower level, as determined hereafter.

a, b, c, d, e denote the horizontal *breadths* of the boat measured in feet at the upper and lower points of the depth and at the three points obtained by dividing *h* into four equal parts (*a* and *e* being the breadths at the extreme points, and *c* at the middle point, of *h*).

If the sheer of the gunwale, measured at the two points situated at a quarter of the length of the boat from the ends, exceeds 1 per cent of the length of the boat, the depth employed in calculating the area of the cross-sections *A* or *C* shall be deemed to be the depth amidships plus 1 per cent of the length of the boat.

If the depth of the boat amidship exceeds 45 per cent of the breadth, the depth employed in calculating the area of the midship cross-section *B* shall be deemed to be equal to 45 per cent of the breadth, and the depth employed in calculating the areas of the quarter length sections *A* and *C* is obtained by increasing this last figure by an amount equal to 1 per cent of the length of the boat, provided that in no case shall the depths employed in the calculation exceed the actual depths at these points.

Internal Buoyancy of Lifeboats.

Open boats, to be acceptable as lifeboats under the Steamboat-Inspection Service, must be provided with internal buoyancy.

The buoyancy of a wooden whaleboat shall be provided by water-tight air cases, the total volume of which shall be at least equal to one-tenth of the cubic capacity of the boat.

The buoyancy of a metal whaleboat shall not be less than that required above for a wooden boat of the same cubic capacity, the volume of water-tight air cases being increased accordingly.

HOISTING SLINGS.

The manufacture of wire rope and chain hoisting slings for boats has been assigned to the Boston and Puget Sound yards.

The manufacture of these articles should not be undertaken at any other yards without special authority from the bureau.

When it becomes necessary to alter or repair chain slings they should in all practicable cases be forwarded to the Boston or Puget Sound yards for such alterations and repairs. If this procedure is not practicable, the greatest care should be exercised in making repairs. The question of forwarding slings in need of alterations and repairs should be taken up as soon as such needs become known, in order that, if practicable, the slings may be returned for use without issuing new slings in lieu thereof. New chain slings should be issued from stock either temporarily or permanently when there is not sufficient time to send chain slings to Boston and Puget Sound and have them returned before the vessel leaves the yard.

Chain slings and shackles and rings attached to wire rope and chain slings will not be galvanized. The shackles which connect chain slings with hoisting pads in boats are considered part of the slings.

After completion of building or of repairs, the boat shall be suspended for 10 minutes by its slings, or other fittings if slings are not provided. If practicable, the boat during this test shall be suspended over water with the keel just clear of the surface, so as to minimize damage to the boat should the hoisting appliances fail. If the test is not made over water, the boat should be suspended with its keel just clear of the ground or shop floor. During this test, the boat will be weighted to 50 per cent in excess of the maximum hoisting weight under service conditions. Half of the ballast used for this test will be placed forward and half aft, distributed as near to the hoisting pads as practicable.

This test is primarily a test of the hoisting pads and fastenings. It should be applied whenever any work has been done on the slings or pads, or any work performed that affects the fastenings; it should be applied when the boat has undergone extensive repairs, whether or not the fastenings are directly affected.

Before finally accepting boats, ships will test them by hoisting them by the slings and appliances that normally will be used in service. This is primarily to test the fit of the slings.

When slings have been manufactured or repaired, they should be tested in accordance with the following table, which applies to designs in general use when it was first prepared (1913). In case of newer designs, the tests called for on the individual boat sling plan should govern.

"BOAT INSTRUCTIONS," 1916—INSPECTION OF WIRE ROPE BOAT SLINGS.

All wire rope boat hoisting slings shall be carefully inspected every three months and tested by suspending the boat for ten minutes, during which test the boat will be weighted to 50 per cent in excess of the maximum hoisting weight under service conditions. The ballast used for this test will be placed forward and aft, distributed as near to the hoisting pads as practicable. When inspection indicates the wearing of the service and the possibility thereby of the wire rope being subject to exposure to moisture, the service, parcelling and worming shall be removed and the wire carefully inspected for signs of rust or deterioration. Any rusted or deteriorated slings shall at once be surveyed, to be replaced if deemed advisable. After each inspection the copper seal indicating the previous inspection and test should be removed and a new copper seal should be attached to the slings to indicate when and by whom they were last tested, and date of test. A record should be kept at navy yards and on board ship of the date of inspection and condition of sling at that date, for each boat inspected and tested. It should be noted in this connection that wire rope hoisting slings are now considered a portable part of the hull to which fitted and belong to the same hull throughout its life—not independent outfit which is suitable for transfer from boat to boat.

Table 12.—Test Load in Pounds.

	Ring connecting legs of wire rope.	Wire rope and shackle.	Ring connecting legs of chain.	Chain and shackle.
50-foot steamer	70,000	50,000	50,000	25,000
40-, 36-, 33-foot steamers	46,000	32,000	32,000	20,000
50-foot motor sailing launch				
40-, 36-, 33-, and 30-foot sailing and motor sailing launches and 30-foot steamer	25,000	18,000	18,000	10,000
30-, 28-, 26-, and 24-foot cutters	7,600	6,400	6,400	3,400
31-foot racing cutter; 30-, 29-, 28-, and 24-foot whaleboats; 30- and 28-foot gig whaleboats.	7,600	6,400	.....	.....
20- and 16-foot dinghies	3,300	2,300	.....	.....
14- and 12-foot punts	3,000	2,000	.....	.....
10-foot punt	1,500	1,000	.....	.....

The commandants, Boston and Puget Sound, have been instructed to test all hoisting slings (both chain and wire rope) at the yard under his command before same are issued, and to attach copper seals to the slings to indicate that fact. When slings are repaired at a yard other than Boston or Puget Sound, they should be tested before issue in accordance with the next preceding paragraph, and copper seals should be attached to the slings so tested to indicate the yard where last tested.

If upon testing old-design slings in service any part should prove to be defective, it should be replaced by a part in accordance with the new standard plans.

It is the intention that no slings be issued without test seals attached, and in case slings are received at a navy yard which have no test seals attached they should be tested and sealed before reissue, whether or not repairs have been undertaken.

BOAT REGISTRY NUMBERS.

Each boat, when the building is authorized, will be assigned a registry number by the bureau, except in the case of boats built at the naval station, Olongapo.

These numbers will be in sequence, for navy-yard built boats, as authorized, irrespective of the yard where built or of the type of boat.

The use of letters in connection with registry numbers to indicate the yard has been discontinued. The boat label plate will give this information.

Boats built at the naval station, Olongapo, will be assigned registry numbers by the commandant consecutively as authorized, and the bureau should be immediately notified when the number has been assigned. Nos. 1500 to 1599 have been reserved for this purpose.

Boats purchased or built under contract will be numbered in a series separate from boats built by the government. A "C" and dash will precede the number assigned—thus, "C–102."

In case a boat is found to be without a number, application should be made to the bureau for same.

The Bureau of Construction and Repair will inform the Bureau of Steam Engineering when registry numbers are assigned to power boats.

The registry number of pulling boats, including motor sailing launches, should be cut into the keelson immediately below and at the after end of the stern-sheet grating or shutter. If there is no keelson securely fastened in the boat, the number should be cut into the covering board on the top of the keel.

In the case of power boats of the decked or partially decked type, the registry number should be cut into the starboard side of the stem, the numbers to be 2 inches in height and the top about 4 inches below the lower edge of the molding.

REPORTS.

Correspondence relative to boats should always specify the name (type) of boat, its length, and its registry number.

Post Card Form Reporting Boats When Ready for Issue.

In order to comply with emergency requests for boats, it is necessary for the bureau to know at all times exactly what boats are in store available for issue.

A special post card, Form N. C. R. 133, should be mailed, therefore, to the bureau immediately upon the completion of the building of or repairs to a boat. A small stock of these post cards has been forwarded to the yards concerned. Additional cards will be forwarded to the yards upon application to the bureau.

Changes in Status of Boats.

All changes in the status of boats should be immediately reported to the bureau. This will include the issuing of boats from store, the turning into store, shipment from yard to yard or transfers from ship to ship. The report should state the authority for the issue or transfer, and when a boat is issued to replace another one, the length, type and registry number of the boat replaced are also to be given.

No boats should be issued, turned in, or transferred from one service to another, unless an emergency exists, except upon specific authority of the bureau. Steam or motor barges assigned for the personal use of flag officers will, however, be transferred from ship to ship with the flag without especial authority of the bureau. Such transfers should be immediately reported to the bureau.

Radiograms, as well as letters requesting authority for issues or exchanges of boats, should state clearly the reason for such requests in order that the bureau may be in a position to act on the matter intelligently.

Requests for repairs to boats beyond the capacity of the ship's force should be made in ample time for the boat to be repaired and returned to the vessel. The bureau will not look with favor upon emergency requests for the replacement of boats needing repairs which are sent in just prior to the sailing of a vessel when such need for repairs could have been anticipated.

Annual Reports of Cost of Boats Built.

A statement of the cost of all boats built at navy yards during a fiscal year should be forwarded to the bureau from each yard as soon as practicable after the expiration of each fiscal year.

The cost of a boat should not include the items of outfit which are carried on the allowance lists, but should include all of the portable parts which are ordinarily invoiced as part of the hull.

These reports should be submitted on Form N. C. R. 122, a separate sheet being used for each type and size of boat reported.

After the total cost of a boat, divided into material, labor, and indirect, has been tabulated, a separate additional statement should be added, giving the cost of labor in the boat shop.

Quarterly Boat Reports.

Immediately after the end of each quarter, reports shall be submitted on Forms N. C. R. 14 and 15 from the navy yards and naval stations under the following heads:

1. Boats in yard service.
2. New boats in store.
3. Repaired boats in store.
4. Boats building.
5. Boats repairing.
6. Boats awaiting survey.
7. Boats condemned.
8. Boats suitable for naval militia or yard use, but not for issue to ships.
9. Condemned boats reserved for Boy Scouts.

A wide space should be left on the boat reports between each list of boats (under the different headings) so that the bureau will have space to add boats that are ordered built between the time of receipt of last boat report and the one to be forwarded the next quarter, and to add boats that are condemned from ships to be turned in at the different yards, etc.

The power boat report (N. C. R. 14) should be submitted in duplicate. The duplicate will, upon receipt, be forwarded by the Bureau of Construction and Repair to the Bureau of Steam Engineering.

In the case of boats turned into store from some previous service, the remarks column should state the source from which received and the date.

In the case of boats issued since the next previous report was submitted, the remarks column should contain a statement as to the vessel or other service to which the boat was issued or shipped and the date.

Boats which have been condemned should be carried on subsequent reports until finally disposed of. The actual disposition should then be stated, and the boat dropped from future reports.

In arranging the boats under the various heads it is desired that they be arranged according to types and not serially according to numbers; thus, under steamers, all 50-foot boats will be entered, then all 40-foot, 36-foot, etc. Under pulling boats, first the launches will be entered in the order of their length, then the cutters in the order of their length, etc., following the order in which they are given in the table of carrying capacities, *i. e.*, launches, cutters, whaleboats, dinghies, dories and wherries.

Boats in yard service should always be carried on Forms N. C. R. 14 and 15, whether actually in use or temporarily laid up for repairs.

When a boat is turned in from a vessel for repairs, and is to be reissued to the same vessel (the vessel being in commission), it should not be included in the quarterly boat report.

Boats which are turned in for repairs for general issue should, however, be included, with a statement in the remarks column as to the vessel from which received.

The signature of the construction officer should be placed upon the last sheet of each form. No letter of transmittal should accompany these forms when forwarded to the bureau.

30-FOOT SAILING AND MOTOR SAILING LAUNCH.

(Standard Plan No. 213.)

Nomenclature of parts and fittings, and material of which they are made, as indicated on Fig. 35.

Scantlings.

Reference No.	Name of Part.	Material of Which Made.
1	Stem	White oak.
2	Apron	White oak or laurel.
3	Stem knee	White oak or laurel.
4	For'd d adwood	White oak or laurel.
5	Keel	White oak.
6	False keel	White oak.
7	Filling pieces	Spruce or yellow pine.
8	Keelson	Yellow pine.
9	Footlings	Yellow pine.
10	Bilge knees	White oak.
11	Risings	Yellow pine.
12	Planking	White or Port Orford cedar, cypress or juniper.
13	Binding strake	Yellow pine.
14	Sheer	White oak.
15	Fender (upper)	White oak.
16	Fender (lower)	White oak.
17	Clamps	Yellow pine.
18	Capping	White oak.
19	Thwarts	Ash.
20	Floors	White oak.
21	Frames	White oak.
22	For'd platform	Ash or teak.
23	For'd platform beams	Yellow pine.
24	Gun foundation	Yellow pine.
25	For'd stringer	Yellow pine.
26	For'd flooring	Yellow pine.
27	For'd flooring beams	Yellow pine.
28	Bulkhead	Yellow pine tongue and groove.
29	Side benches	Ash.
30	After flooring	Yellow pine.
31	After flooring beams	Yellow pine.

Reference No.	Name of Part.	Material of Which Made.
32	Stern bench	Ash.
33	Transom	White oak.
34	Stern post	White oak or laurel.
35	Stern knee	White oak or laurel.
36	Shaft log	Teak, white oak or laurel.
37	Rudder	White oak.
38	Rudder stop	White oak.
39	Stern fender	White oak.
40	Engine keelsons	White oak.
41	Engine keelson brackets	White oak.
42	Side bench stanchions	White oak.
43	Side bench supports	White oak.
44	Transom cleat	White oak.
45	For'd towing post	White oak.
46	After towing bitts	White oak.
47	Saddle	Yellow pine.
48	Third strake	Yellow pine.

Fittings.

50	Bow roller	Comp. "S."
51	Breast hook	Comp. "S."
52	Stem band	Comp. "S."
53	Hoisting pad	Med. St. Gv.
54	Washer	Med. St. Gv.
55	Bolt	Copper.
56	Bow chock	Comp. "S."
57	Mine crane sockets	Comp. "G."
58	Flagstaff plate	Comp. "S."
59	Awning stanchion	Comp. "S."
60	Heel plate	Med. St. Gv.
61	Step, towing post	Comp. "S."
62	Retaining pin	Comp. "Nr."
63	Norman pin	Comp. "Nr."
64	Bow sprit	Med. St. Gv.
65	Capacity label	Sheet brass.
66	Bobstay cleat	Comp. "S."
67	Bow light bracket	Med. St. Gv.
68	Running light box	Med. St. Gv.
69	Hoisting pads, S. L. 2, M. S. L. 1	Comp. "S."

Reference No.	Name of Part.	Material of Which Made.
70	Hoisting pad	Comp. "S."
71	Washer plate	Comp. "S."
72	Mast step	Comp. "S."
73	Mast clamp	Med. St. Gv.
74	Thwart clamp	Med. St. Gv.
75	Chain plate	Med. St. Gv.
76	Thole pin plate	Comp. "S."
77	Thwart plate	Comp. "S."
78	Engineer's locker	Med. St. Gv.
79	Engine cover	Med. St. Gv.
80	Bell bracket	Comp. "S."
81	Gasoline tank	
82	Shaft log cap	Comp. "G."
83	Stern bearing	Comp. "G."
84	Hand bilge pump	
85	Transom knee	Med. St. Gv.
86	Cleat	Med. St. Gv.
87	Norman pin	Comp. "Nr."
88	Short tiller	Oak.
89	Sailing tiller	Oak.
90	Stern roller	Comp. "S."
91	Main sheet traveler	Med. St. Gv.
92	Chafing plate	Comp. "S."
93	Upper brace	Med. St. Gv.
94	Rudder hanging	Comp. "S."
95	Lower brace	Med. St. "G."
96	Shoe	Comp. "G."
97	Rudder bolt	Copper.
98	Footling buttons	Comp. "S."
99	Bolt	Copper.
100	Boat plug	Comp. "S."
101	Chain sling	Wrought iron.
102	Strap, gasoline tank	Med. St. Gv.
103	Clip (frame to keelson)	Med. St. Gv.
104	Socket (bell bracket)	Comp. "S."
105	Keel pad	Comp. "G."

NOTE.—Comp. "S" indicates Yellow or scrap brass.
" "G" " Gun bronze.
" "Nr" " Rolled naval brass.
Med. St. Gv. " Medium steel galvanized.

Fastenings.

Keel, stem, stern post, deadwood, knees and apron—$\frac{3}{4}$-inch copper bolts.

Floors to keel—5-inch Comp. spikes. Frames to floors—20d galvanized boat nails.

Planking above bilge—20d copper nails; below bilge—20d galvanized boat nails.

Planking ends and garboard lower edge—$2\frac{1}{2}$-inch No. 16 brass screws.

Clamps—40d galvanized C. P. boat nails (riveted). Filling blocks—8d galvanized nails.

Risings and transom knees—$\frac{3}{8}$-inch copper rivets. Footlings—8d galvanized nails.

Keelson to keel—$\frac{5}{8}$-inch copper rivets. For'd stringer—$\frac{3}{8}$-inch copper rivets.

Forward platform—20d galvanized nails. Beams—3-inch No. 30 brass screws.

Gun-circle filling—$1\frac{1}{2}$-inch No. 14 brass screws. Capping 8d galvanized nails.

Forward flooring—12d galvanized nails.

After flooring—8d galvanized nails. Beams—8d galvanized nails.

Bulkhead—6d galvanized nails.

Bilge knees—10d steel wire nails; to frames—20d galvanized boat nails.

NOTE.—The 20d galvanized boat nails fastening frames to floors, bilge knees to frames, and planking below bilge are to be cut off before driving so that the points will not be exposed to the action of bilgewater.

Outfit.

Number of Pieces	Name of Article.
1	Anchor, 90 lbs.
1	Anchor chain, $\frac{1}{4}$-inch, 30 fathoms long.
1	Awning, boat.
2	Awning stanchions.
1	Bag, awning.
1	Bag, sail.
5	Blocks, 4-inch clump, lignumvitæ, single, $\frac{3}{4}$-inch mortise.
3	Blocks, 4-inch wood, double, $\frac{13}{16}$-inch mortise, sister hooks.
2	Blocks, 4-inch wood, double, $\frac{13}{16}$-inch mortise, sister hooks and beckets.
2	Blocks, 4-inch wood, single, $\frac{13}{16}$-inch mortise, sister hooks.
1	Boat bucket.
1	Boat chest.
3	Boat hooks.
3	Breakers, 8 gallons.
3	Breaker stands.
1	Cover, boat, No. 5 cotton canvas.
1	Cover, sail.
8	Fenders, side.
1	(Flag) ensign, No. 10.
1	(Flag) position pennant, No. 6.
1	(Flag) answering pennant, No. 6.
2	Flagstaffs.
2	Grapnels, 4 pounds.
12	Grommets for thole pins, 4 stranded hemp.
1	Lantern shutter.
12	Lanyards, thole pin.
2	Lines, grapnel.
14	Lines, trailing.
2	Oars 14 feet long.
10	Oars 15 feet long.
2	Oars, spare.
1	Painter, bow.
1	(Rigging) downhaul, jib.
1	(Rigging) halyard, jib.
1	(Rigging) halyard, peak.
1	(Rigging) halyard, throat.
1	(Rigging) sheet, jib.

Number of Pieces.	Name of Article.
1	(Rigging) sheet, main.
4	(Rigging) shroud.
4	(Rigging) shroud whip.
1	(Rigging) stay, jib.
1	Sail, jib.
1	Sail, main.
1	Sling, wire rope.
1	(Spars) boom.
1	(Spars) gaff.
1	(Spars) mast.
1	Tarpaulin.
12	Thole pins.
1	Bell.
1	Fire extinguisher.
1	Light, white, for'd.
1	Light, white, aft.
1	Light, running, red.
1	Light, running, green.
1	(Rigging) topping lift.
1	(Rigging) topping lift bridle.
1	(Rigging) jib stay lanyard.

TO TAKE THE SPILING OF A PLANK FOR A BOAT.

It is necessary to have what is known as a "spiling staff," which is a strip with straight edges, about $\frac{1}{2}$ inch thick, 2 inches or 3 inches wide, and as long, or longer than the plank which is to be gotten out.

Tack the staff, without springing it any, to the frames of the boat, near the edge of the plank which it is desired to fit against; mark the position and number of each frame on the staff; measure the distance from the staff to the edge of the old plank at each frame, and record these measurements on the staff at the positions of the respective frames; also measure and mark the width of the plank at each frame. Remove the staff and tack it on the stock plank from which it is to be made; transfer the measurements to the stock plank from the staff

at each position, as they were taken from the boat. Run a line by spline through these points; this will give the shape of the edge of the plank. Measure width at each frame position, and a line through these points will give shape of the other edge of plank. The bevel is now taken at each frame and marked on the plank at each frame position. The plank, after being worked to these lines, is ready to be fitted in place.

The position of butts may also be recorded on the spiling staff, and transferred to the plank while laying off the lines for the edges; this will save the time of putting the plank up in place to find the butts.

TO LAY OFF THE PLANKING OF A BOAT.

First work out the sheer and garboard strakes and fasten them to the frames of the boat.

Measure the girth of the midship frame from the lower edge of the sheer strake to the upper edge of the garboard strake; expand this measurement on a straight line on the floor or other plane surface, and form a triangle, of any altitude, the higher the better, with equal legs or sides, using the expanded girth of midship frame as base of the triangle.

Divide the base into the number of strakes required to suit the available material for planking, draw a straight line from the vertex of the triangle to each point laid off for a strake edge on the base. Then take the girth at each frame in a similar manner as taken at the midship frame, apply these girths expanded to the triangle, parallel to the base line; lines thus drawn where the length of each girth touches the sides of the triangle, will give the widths of strakes at their respective frames, where the lines inside the triangle intersect.

Mark these widths on their respective frames, and a spiling batten laid to these points will give a nice line throughout the entire length of the boat.

REPAIRING BOATS.

Temporary repairs may be made to a boat that has a hole punched in it, without taking the boat out of the water, if the hole is not too far under the bilge, as follows: List the boat over till the hole comes above the water, then tack a piece of canvas (painted) and sheet lead over it; or if time is limited, sheet lead alone will do. When the boat is hoisted in, of course permanent repairs are made by putting in a graving piece, or new plank. To put in a graving piece, get out a piece of material similar to that with which the boat is planked, the width of the plank through which is the hole, and if near a butt, long enough to connect from there to the nearest frame. Cut out for the piece and drive it in tight; after fastening well, calk around the piece with lampwick or cotton and pay the seam with white-lead putty.

LAYING WOODEN DECK.

Wooden decks on battleships are of yellow pine, usually about 3½ inches to 4 inches square on main deck, about 3 inches on upper deck and 2½ inches on bridges. Decks on bridges are sometimes made of white pine. Plank sheers or margins of teak are usually fitted in wake of all hatches, at boundaries of decks, in wake of all coaling scuttles, and at foundations around barbettes.

Lay a strake of deck plank parallel to the center throughout the whole length of the ship, secured to the beams in this manner: After getting the plank in line, bore holes through it from the under side, and counter bore these holes from the top side to fit the bolt heads and wooden deck plugs; drive the bolts down from the top until they are hard down and far enough through to secure a nut. Deck bolts should have a small grommet made of lampwick, soaked in white lead, under their heads before driving them. After these bolts have been drawn through, put on the nut and set up hard; then drive in

the wooden deck plugs, dipping them first in white lead. Care must be taken, in fitting planking, to secure a snug fit of each plank against the other and to obtain fair edges.

All beams, deck plates and stringer plates are to be well painted with red lead before laying deck. Butts should be broken, so that four strakes come between each butt.

A bevel (called out-gage) of about $\frac{1}{16}$-inch on top edge of each plank, running to nothing at center, is taken off, to prevent splintering edges of plank when calking. The calking fiber is composed of one thread of roven cotton first, followed by two threads of oakum on new decks, after which seams are payed (filled) with marine glue (or pitch).

Graving Pieces in Decks.—Small rotten spots, dents or other defects in decks may be repaired by putting in a graving piece. To do this, cut out far enough on each side of the defect to get solid wood; then fit in a piece of material similar to deck; and if defect does not go entirely through the deck, the graving piece may be fastened down, with flat-head wood screws, letting them in far enough to put plugs over the heads. Such pieces should be well painted with white lead, and paint skins should be put under pieces when they are put in the deck, after which calk and pay seams.

Joiner Work.—All joiner work or cabinet work should be carefully done, making close joints and good fits at mortises, and smooth surfaces on panels, etc. Joiner work, if made of white or yellow pine, should be given a coat of clear shellac as soon as possible after being put together, to prevent absorption of moisture and oozing of turpentine gum, which would come through and stain the paint, especially where work is to be painted white. Hardwood work should also be shellacked, unless it is to be stained or a wood filler used. All material for this kind of work should be well seasoned, and thoroughly dry. When thin, wide pieces are being worked, they should be kept under straight-edges, with weights on them, to prevent warping while waiting to be assembled.

White pine will be found very serviceable for stopping leaks by driving in plugs or wedges of it, because it swells very quickly when wet, which aids considerably in stopping the leak.

No other except copper, brass or galvanized nails or screws should be used on boats or other woodwork exposed to salt water; ordinary black iron or wire nails will run rust.

Pattern Making.—White pine is the best material of which to make patterns, because it has a smooth grain, is easier to work, and shrinks and warps less when drying than other woods.

In making patterns, three very important things are to be considered, namely: Shrinkage, draft and allowance for finishing the casting.

Shrinkage.—A casting is always smaller than the mold in which it was made. This difference in size is due to the shrinkage in the material when cooling. The allowance for shrinkage varies somewhat with the size and shape of the casting, and with the metal of which it is made; heavy castings do not shrink as much in proportion as small ones. Iron (cast) will shrink about $\frac{1}{8}$ inch to the foot, and common brass $\frac{3}{16}$ inch, in medium-size castings. Although, for all practical purposes, an allowance of $\frac{1}{8}$ inch to the foot will give satisfactory results; that is, the pattern should be made $\frac{1}{8}$ inch to the foot larger than the casting is required to be. Pattern makers use what is known as a shrink or contraction rule, which is graduated in the same manner as an ordinary carpenter's rule, except that all divisions on it are $\frac{1}{8}$ inch to the foot greater in length. This rule is very convenient, as fractions of a foot or even an inch can be measured accurately, always giving the proper allowance for shrinkage.

Draft.—By this is meant a slight taper which should be given to patterns, so that they may be more easily drawn from the mold. Ordinarily about $\frac{1}{16}$ inch to the foot is sufficient, and this taper should, of course, be applied according to the shape of the pattern, having the taper from the face, or that

portion of the pattern which will most conveniently form the parting line of the mold.

Finish.—When a casting is to be finished or machined, an allowance for this purpose must be made on the pattern; for small and medium-size castings, about $\frac{1}{8}$ inch on all surfaces that are to be finished is a very good rule; on heavy castings, such as the beds of heavy machinery, etc., as much as $\frac{3}{4}$ inch to 1 inch is sometimes required, because the heavier castings are more liable to have flaws, shrink holes, etc., than small ones. It must be noted that this allowance is not $\frac{1}{8}$ inch to the foot, but $\frac{1}{8}$ inch on every surface that is to be finished, in addition to the allowance for shrinkage; therefore, in making a pattern for a casting that is to be finished, it should be made $\frac{1}{8}$ inch to the foot larger for shrinkage, and $\frac{1}{8}$ inch larger on each surface that is to be finished.

It is sometimes necessary to make patterns in two or more parts, where projections or irregular shapes occur. In all such cases the parts should be neatly matched, with guide pins fast in one part, and fitting snugly in holes in the other; parts should be marked to show exactly where they belong.

All patterns should be well coated with shellac.

SCARFS FOR CONNECTING TIMBERS END ON.

The following scarfs are used for making end connections of timbers:

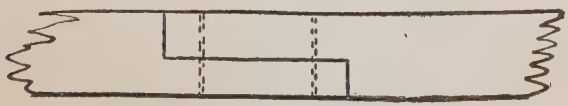

Fig. 36.—Half-and-Half Lap Scarf.

Fig. 36.—Half-and-half lap scarf is made by cutting out one half of the thickness of each timber, which are lapped and securely bolted or spiked together. This scarf is used for ordinary rough work not requiring much strength.

Fig. 37.—Plain lap scarf is made by cutting a nib and taper on each piece, which are lapped and securely bolted

FIG. 37.—Plain Lap Scarf.

together. This scarf is used for rails, capping, keelsons and other miscellaneous medium-size work.

Fig. 38.—Hook scarf is made by cutting a nib and hook taper on each piece, which are lapped and securely bolted

FIG 38.—Hook Scarf.

together. This scarf is used on keels, keelsons, rails and miscellaneous heavy work, where there is considerable tension or pulling strain.

Fig. 39.—Key scarf is made by cutting a nib and taper on each piece, with a slot for a key through the joint at the center,

FIG. 39.—Key Scarf.

the pieces are lapped and bolted, and the key driven tight. This scarf is rarely used, but may be used on keels, keelsons or other timbers which are fastened permanently in place.

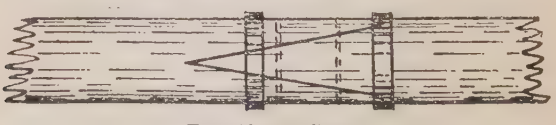

FIG. 40.—V Scarf.

Fig. 40.—"V" scarf is made by cutting a V in one piece and a tongue in the other to fit into the V, and bolted. This

scarf can be used on medium and small work; it is often used on small masts and booms, and when so used, should be secured with bands or seized (wrapped) with wire seizing.

The length of a scarf, as compared to the thickness of the timbers, should be about as 12 to 1.

Example: If the timbers are 3 inches thick the scarf should be about 36 inches long.

SPAR MAKING.

As propulsion with sails is no longer employed in the Navy, except on a few of the smaller boats carried on shipboard, the subject of spar making will be confined here to such booms as are now used on ships for various purposes.

PROPORTION OF BOOMS.

The proportional dimensions of booms are governed by the uses for which they are to be employed.

For swinging booms, the following proportions will be found satisfactory:

For the smaller vessels, such as gunboats, small cruisers, etc., having light boats, the greatest diameter of the boom should be 1 inch for every 5 feet of length of boom, the inboard end to be four-fifths of the greatest diameter and the outboard end two-thirds of the greatest diameter.

For battleships and large cruisers, which carry heavier boats, the greatest diameter to be 1 inch for every 4 feet of length, the inboard end to be four-fifths of the greatest diameter, and the outboard end seven-tenths of the greatest diameter.

For coaling booms, the loads to be hoisted and other conditions vary so much that no fixed rule can be given for these proportions; they will be found, however, to run 1 inch greatest diameter to from every 2 to 4 feet of length, with heel four-fifths and head two-thirds of greatest diameter.

Booms are made larger at or near the middle than at the ends, because the greatest strain comes on them at the middle,

and they taper from this point toward the ends, but the taper is not straight, being rather a long easy curve similar to the contour of a barrel.

In laying off a boom to get the proper curve of the taper, the following rule may be applied as illustrated in Fig. 41

For example, a swinging boom is to be made for a battleship, the boom to be 40 feet long, the proportions given above require

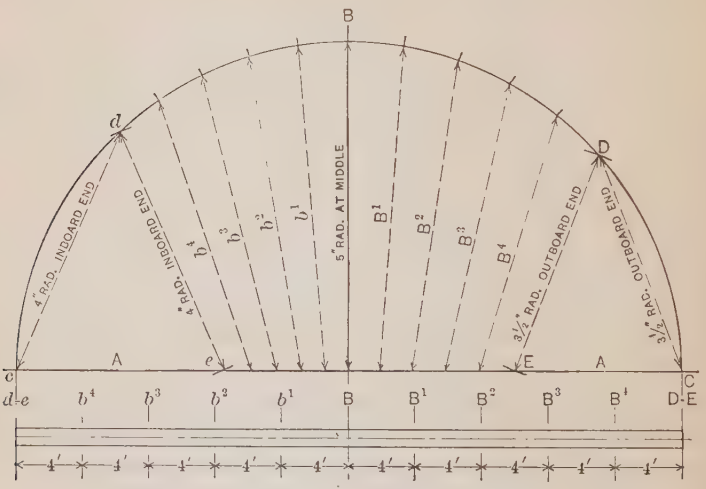

FIG. 41.—Method of Laying off Booms.

1 inch of greatest diameter for every 4 feet of length; therefore the greatest diameter of this boom will be 10 inches, the inboard end is four-fifths the greatest diameter, which is 8 inches; the outboard end is seven-tenths the greatest diameter, which is 7 inches. The dimensions of the boom as found are: Length, 40 feet; diameter at middle, 10 inches; diameter inboard end, 8 inches; diameter outboard end, 7 inches.

To ascertain the diameters at various points for giving the proper curve of taper:

First draw base line *A*, on this line inscribe half-circle using radius of greatest diameter of boom (5 inches);

Through the center of half-circle erect vertical line *B*. Use one side of half-circle to lay off outboard end of boom and the other side to lay off inboard end as follows:

From the point *C* measure on half-circle (chord pitch), the radius of outboard end ($3\frac{1}{2}$ inches) to *D*, from the point *D* intersect the line *A* with the same radius at point *E*.

Point off the arc *D-B* and the line *E-B* into any number of equal spaces, the greater number of divisions used here the nicer curve will be produced; as it is 20 feet from the middle of boom to the end, five divisions or spaces are used giving a dimension for every 4 feet, which is sufficient.

Lines drawn between the respective points on the arc *D-B* and the line *E-B* are the radii or half the diameter of the boom at every 4 feet between the outboard end and center; the other side is laid off in the same manner for the inboard end.

With the stick or pole squared up roughly, leaving plenty of stock to finish, a center line is made from end to end with chalk line; midway between the two ends, the distance *B-B* (5 inches) is marked on each side of the center line, at 4 feet toward the outboard end, the distance *B1-B1* is marked in, at the next 4 feet the distance *B2-B2*, etc., till all dimensions are marked at their respective places, after which a line is drawn through these points, giving a nice curve as required.

The stick is then worked down square to within about $\frac{1}{8}$ of an inch of the marks, after which it is eight squared, and if large enough to require it, may be sixteen squared; it is then made round by planing, using calipers to get the exact sizes at the various points.

SELECTION OF MATERIAL.

Much care should be exercised in the selection of poles for making masts, booms, etc., to get them sound and as straight as possible; sticks of timber not quite straight, if sufficiently

large, may be used, the workman having always an opportunity of working them straight in cutting off the surplus stock; it is best, however, to use a pole as near the size of the finished spar as possible, which makes a stronger boom or mast, requires less labor to finish and avoids unnecessary waste of material.

When a pole is selected, a short piece should be cut off the butt to see if the heart is sound; if it has white pithy veins or is rotten or shaky at the heart it is bad; if so, continue taking off more pieces while there remains sufficient length.

When the butt shows sound, search along the sides, dubbing spots at intervals; and carefully examine all knots, rind-galls, etc. If sound and clear, line, lay off and begin working it down.

FILING HAND SAWS.

Saws for Cross Cut and All Round Work.

The first operation in filing a hand saw is to joint it; which is done by running a flat file along on the points of the teeth till they are uniform in height; saws are usually jointed slightly crowning in the center.

After this the saw should be set, to use a hammer or hammer set, with light blows, is considered the best method, spring sets cause the teeth to bulge back at the root, where they will rub, causing excessive friction, and in time seem to have a deteriorating effect on the fiber of the steel, causing the teeth to break off. The teeth should be set a little more than required to allow for side dressing. Side dressing, which should follow setting, is done by running a flat file lightly along each side of the saw teeth to bring them in line.

The saw should now be examined to see if all the teeth are dull (blunt), and if not the points should be jointed again. The jointing, setting and side dressing completed, the saw is now ready to file.

The saw clamp should be located so as to obtain the best light. The top of the clamp should be level with the arm pits, whether sitting or standing, although the latter is preferable.

Place the saw in the clamp with the point to the left, begin filing at the point and progress toward the heel.

Always file the teeth which are set away from you, lowering the file handle slightly, to give the tooth proper pitch, and holding it at an angle which will give the teeth the proper bevel. It is essential that the bevel be placed on the front of the teeth. The exact pitch and angle of the bevel cannot be given here, as they vary according to the class of work or nature of the wood, on which the saw is to be used, and these details, while important, must be learned by observation and experience.

For a beginner, a careful examination of a properly sharpened saw will be of great assistance.

Grasp the handle of the file firmly with the thumb up. In going over the saw in this position do not file the teeth to a point, but still file deep enough to leave the points equal distance apart, after the saw is filed from the other side.

If one tooth is larger than the others, don't roll the file over to file more off the large tooth, but keep the file in the same position as to pitch, crowding against the large tooth and bearing slightly on the other, till the large tooth is down like the others.

After the saw has been moved for another part to be filed, place the file in the last place formerly filed, and press on the file in different ways till it fills the space, thus getting the angle of pitch and bevel the same as just used, and continue as before.

The saw is here reversed with handle to the left; begin this side, filing from heel toward the point; hold the file with the pitch and bevel the same as the other side, and file the teeth to a sharp point only.

To prove that you have the same pitch and bevel, sight over the teeth to see if a groove is in the center; if not change the pitch and bevel till it does show in the center.

After filing, the saw is laid flat on a straight board for the final side dressing, which is done by running a flat file over

the sides of the teeth from the heel to the point, one run of the file on each side. Try the saw to see how it cuts. If the set is too wide, another run of the file on each side, or perhaps two, may be required to reduce the set to the proper width.

It will be observed that a part of the sides of the teeth are flat.

For the next two or three filings, no setting of the saw will be required (unless it has been run on a nail), but the teeth should be side dressed with a hard oil stone, instead of a file, to take off the wire edge.

Rip Saws.

Rip saws should be filed square (straight) across the front of the teeth, with the handle of the file lowered about 2 or 3 inches, giving a bevel to the top of the teeth.

A thick blade requires more bevel than a thin one.

STANDARD SIZES OF NAILS, TACKS, BRADS, SCREWS, ETC.

Commercial Sizes of Cut Nails, Wire Nails, Brads, Etc.

Designation.	Length.
½ inch	½ inch.
⅝ inch	⅝ inch
¾ inch	¾ inch.
2d	1 inch.
3d	1¼ inches.
4d	1½ inches.
5d	1¾ inches.
6d	2 inches.
7d	2¼ inches.
8d	2½ inches.
9d	2¾ inches.
10d	3 inches.
12d	3¼ inches.
16d	3½ inches.
20d	4 inches.
30d	4½ inches.
40d	5 inches.
50d	5½ inches.
60d	6 inches.

Usual Sizes of Various Cut Nails.

Clout nails, $\frac{5}{8}$ inch to 2 inches, subject to practical test.

Clinch nails, 2d to 20d, subject to practical test.

Cut finishing nails, iron, 2d to 12d.

Copper or brass finishing nails, $\frac{5}{8}$ inch to 8d.

Copper nails, $\frac{1}{2}$ inch to 60d.

Cut slating nails, yellow metal, $1\frac{1}{4}$ inches and $1\frac{1}{2}$ inches; copper, $1\frac{1}{4}$ inches and $1\frac{1}{2}$ inches; zinc, $1\frac{1}{4}$ inches and $1\frac{1}{2}$ inches; iron, black, tinned, or galvanized, $1\frac{1}{8}$ inches, $1\frac{1}{4}$ inches, $1\frac{1}{2}$ inches, $1\frac{3}{4}$ inches and 2 inches.

Boat nails, Swede's iron, black or galvanized, $\frac{3}{4}$ inch to 60d, subject to practical test.

Sheathing nails, yellow metal, $\frac{3}{4}$ inch to 2 inches, increasing by $\frac{1}{8}$ inch subject to test. Specify length of material and the fact that sheathing nails are desired. Zinc $1\frac{1}{4}$ inches and $1\frac{1}{2}$ inches long, subject to practical test.

All cut nails must be free from splintered edges.

Copper nails to be flat or oval under heads as specified.

Note.—The sheathing of vessels which are sheathed with copper must be secured and fastened with copper nails, except when copper nails are not available, when composition nails may be used. Composition nails for sheathing should be cut nails with large round head.

Usual Sizes of Various Wire Nails.

Steel, wire, brass or copper. Plain, galvanized or tinned. Flat, brad or button heads.

Commercial sizes of wire nails, brads, etc., are same as for cut nails.

Wire nails, plain or galvanized, 2d to 60d.

Common steel wire brads, 2d to 10d.

Wire finishing nails, 2d to 10d.

Slating nails, steel wire, plain, tinned or galvanized, 2d, 3d, 4d, 5d and 6d.

Brass escutcheon pins, $\frac{3}{16}$ inch commercial sizes up to 2 inches; from 0.134 inch to 0.35 inch diameter.

Plating nails, steel wire, galvanized, 2 inches (0.259 inch diameter), and 3 inches (0.38 inch diameter).

In specifying wire nails the length and thickness of wire desired must be specified as well as any special purpose for which the nails are to be used; also whether steel, copper or brass nails are desired, and if steel whether plain, tinned or galvanized. The shape of the head must also be specified.

Wire brads, copper brads and escutcheon pins must be delivered in 1-pound paper packages, 100 to the case.

Commercial Sizes of Tacks (Iron, Tinned, Galvanized or Coppered; Zinc).

Commercial Designation.	Length.
$\frac{1}{2}$-ounce	$\frac{2}{16}$ inch.
$\frac{3}{4}$-ounce	$\frac{5}{32}$ inch.
1 -ounce	$\frac{3}{16}$ inch.
$1\frac{1}{2}$-ounce	$\frac{7}{32}$ inch.
2 -ounce	$\frac{4}{16}$ inch.
$2\frac{1}{2}$-ounce	$\frac{5}{16}$ inch.
3 -ounce	$\frac{6}{16}$ inch.
4 -ounce	$\frac{7}{16}$ inch.
6 -ounce	$\frac{8}{16}$ inch.
8 -ounce	$\frac{9}{16}$ inch.
10 -ounce	$\frac{10}{16}$ inch.
12 -ounce	$\frac{11}{16}$ inch.
14 -ounce	$\frac{12}{16}$ inch.
16 -ounce	$\frac{13}{16}$ inch.
18 -ounce	$\frac{14}{16}$ inch.
20 -ounce	$\frac{15}{16}$ inch.
22 -ounce	$\frac{16}{16}$ inch.
24 -ounce	$\frac{18}{16}$ inch.

Copper tacks, same length as above specified for iron and zinc tacks, to be formed from stock 0.083 inch in thickness.

The only size of zinc tacks used is 20-ounce.

Commercial Sizes of Wood Screws.

Number.	Approx. Diam. in decimals of an inch.	Nearest Approx. Diam. in 64ths of an inch.
0	.058	$\frac{1}{16}+$
1	.071	$\frac{5}{64}+$
2	.084	
3	.097	$\frac{3}{32}-$
4	.110	$\frac{7}{64}-$
5	.124	$\frac{1}{8}+$
6	.137	$\frac{9}{64}+$
7	.150	
8	.163	$\frac{5}{32}-$
9	.176	$\frac{11}{64}-$
10	.189	$\frac{3}{16}-$
11	.202	$\frac{13}{64}+$
12	.216	$\frac{7}{32}+$
13	.229	$\frac{15}{64}+$
14	.242	
15	.255	$\frac{1}{4}-$
16	.268	$\frac{17}{64}-$
17	.282	$\frac{9}{32}-$
18	.293	$\frac{19}{64}+$
19	.308	$\frac{5}{16}+$
20	.321	$\frac{21}{64}+$
21	.334	$\frac{11}{32}+$
22	.347	
23	.361	$\frac{23}{64}-$
24	.374	$\frac{3}{8}+$
25	.387	$\frac{25}{64}+$
26	.401	$\frac{13}{32}+$
27	.414	
28	.427	$\frac{27}{64}-$
29	.440	$\frac{7}{16}-$
30	.453	$\frac{29}{64}+$

NOTE.—The sign of plus indicates "FULL," the sign of minus indicates "SCANT."

WOOD-WORKING HAND TOOLS.

Descriptions and a Few Notes on Their Proper Use.

One of the most important features in the proper use of wood-working tools is to keep them in good condition; this may be accomplished by first grinding and sharpening them correctly, and then by proper care of the tools while using them.

There is a tool for almost every operation in carpentry, and tools should be used only in the operations for which they are designed and intended. As for example, a cross-cut saw should never be used for ripping, because the teeth, not being set to cut with the grain of the wood, will become choked and dull the teeth; besides the operation will entail more labor than if the proper tool was used; a paring chisel should not be used for mortising; it is not heavy enough for such work and is liable to be sprung or broken; nor should a smoothing plane be used for roughing off lumber, the blade is not so heavy and is ground to a keener edge which will be quickly dulled and necessitate frequent grinding.

Planes.—The following is a list of the planes in most common use by carpenters, joiners and cabinetmakers:

Beading Plane.	Matching Plane.
Block Plane.	Plow Plane.
Circle Plane.	Rabbet Plane.
Dado Plane.	Router Plane.
Fore Plane.	Scraper Plane.
Jack Plane.	Smoothing Plane.
Jointer Plane.	Tooth Plane.

Beading Plane.—The beading plane is used to make the little half-round beading on the edge of sheathing, ceiling, etc., where the pieces join together; this beaded sheathing is often used on ships for boxing in pantry tables that are built in, building wooden partition bulkheads, etc.

Block Plane.—The block plane is a small iron plane from 5½ to 7 inches long, used for small work and for planing end grain; it should be kept very keen and set to cut a fine shaving.

Circle Plane.—The circle plane has a flexible steel face, which by an adjusting attachment, may be set to any required arc, either convex or concave, and is used for planing over or in curved surfaces. This is a very handy tool for smoothing out the throat of a knee bracket, or smoothing the inner curve of a wood frame of a boat.

Dado Plane.—The dado plane is used for making grooves in confined places where a plow plane cannot be used, and for cutting grooves across grain such as the grooves in shelving.

Fore Plane.—The fore plane is used for straightening the edges and surfaces of lumber after it has been roughed off with the jack plane; this plane is about 18 inches long.

Jack Plane.—The jack plane is the first used on rough lumber for roughing it off and preparing it for the fore plane, jointer and smoothing plane; this plane is usually about 15 inches long, and is made heavy and strong for the rough work required of it.

Jointer Plane.—The jointer is used for straightening and squaring up edges; it is usually about 24 inches long; the great length of this plane makes it much easier to straighten and square the material.

Matching Planes.—Matching planes are used for cutting tongues and grooves, and are always made in pairs, one to cut the tongue and the other the groove.

Plow Plane.—The plow plane is used for cutting grooves or slots in lumber, and plowing out where considerable stock is to be cut out as in making a wide rabbet; it has an adjustable guide on the side so it may be set to cut the groove any distance from the edge of the board. Bits from ⅛ to ⅝ inch are provided with each plane for cutting grooves of various widths.

Router Plane.—The router plane is used for cutting grooves in close places where a plow plane or dado plane cannot be used, such as around circles and curved surfaces; also for smoothing the bottom of grooves, panels, or any depressions below the general surface.

Scraper Plane.—The scraper plane has a bit which is really a scraper or thin piece of tempered steel, set at the same angle as a scraper is usually held in the hand; it is used for removing plane marks and other defects on the surface of smoothed lumber, finished cabinet work, etc. Sandpaper should never be used until the scraping is finished, and scraping should never be done after sandpapering; the grit left on the surface after the sandpaper will ruin the edge of the scraper. This tool is used for all general scraping of hardwoods, veneers, etc. By use of an extra cutter, especially prepared for the work, a very good toothing plane is made. With a rough scraper bit it will also do excellent work removing old paint, varnish or glue.

Smoothing Plane.—The smoothing plane is a small plane about 8 to 9 inches long, and is used for smoothing the surfaces of lumber after it has been roughed off with a jack plane and straightened with a fore plane, and to prepare the surfaces for scraping.

Tooth Plane.—The tooth plane has a bit with the cutting edge like the teeth of a fine saw, and is used for slightly roughing surfaces which are going to be glued to make the glue hold better; all surfaces on which veneer is to be glued should be scraped with the toothing plane.

General Remarks on the Use of Planes.—In smoothing a piece of rough lumber planes are generally used in the following order: First, the jack which takes off the rough and removes the saw marks, then the fore to straighten and square up, then the smoothing, followed by the scraper and finally sandpapered. If joints are to be made, the jointer is used to make perfectly straight and square such surfaces as come together; if a rabbet, groove, beading or other special cut is to

be made, the respective planes are used which are made for these purposes.

Plane bits should always be kept sharp, and the cutting edge straight, with the proper flat bevel on the back of the bit. To keep these tools in proper condition, it is essential that the grindstones and oilstones on which they are sharpened should be kept straight across the face; rough grinding or whetting should not be permitted on stones used for sharpening plane bits. Never set a plane down on the cutting face; always lay it on its side; this will prevent striking the bit on nails and other tools, which would nick or dull the bit. Never lay your planes on an iron deck or cement floor, even on its side, for it may be rolled over and the bit would be thus probably ruined, or at least badly dulled.

There is quite an art in planing straight and square which can only be acquired by constant practice. A try-square should be kept handy while planing, and careful tests made to check the results of your planing and to see if the work is being made straight and square; diligent practice and painstaking effort will be rewarded with the same success in handling tools as in other things. Do not be discouraged if at first you cannot do as good work as your bench-mate; he has probably had more experience than you; observe his methods of doing things, and do them the same way, with perhaps improvements which may occur to you, because in many operations different mechanics will accomplish the same, and equally satisfactory results, performing the work, however, in a slightly different manner. And while the principle is necessarily the same, it has been observed that mechanics may have different ways of doing the same thing, according to circumstances or individual choice, in which experience and practice are the best guides. You will thus find that your faculty for performing the various operations, in handling the tools, will develop an accuracy that is maintained without apparent effort, and the ease and perfection with which you can do your work will, and should, become pleasure rather than labor.

Hand Saws.—The following is a list of the hand saws in most common use by carpenters and joiners:

Back Saw.	Dovetail Saw.
Bracket Saw.	Hand Saw (cross-cut).
Compass Saw.	Hand Saw (rip).
Coping Saw.	Hack Saw.
Cross-Cut Saw.	Keyhole Saw.
(One and two-man.)	Panel Saw.

Back Saw.—The back saw is a straight blade, fine-tooth saw with a stiffening piece on the back to prevent it from bending or springing. It is made in lengths from 8 to 30 inches, and from 4 to 6 inches wide; the shorter lengths are used for cutting tenons, dovetails, and other square joints where accurate and neat fits are required. The longer patterns are used in miter boxes, and are sometimes called miter saws.

Bracket Saw.—The bracket saw has a deep iron frame into which very narrow blades are fitted, and is used for sawing out fancy brackets and scroll work, the great depth of frame being made to allow working around pieces of considerable width; this is also sometimes called a scroll saw.

Compass Saw.—The compass saw is a general utility tool; it is used to cross-cut, miter and rip; its general use being to finish out a cut, in close places or sharp turns, where a hand saw cannot be used; it has a narrow, stiff, tapering blade and is made in lengths from 10 to 16 inches; this saw is usually filed to suit all-round work.

Coping Saw.—A small saw with light metal frame and handle similar to a file handle; small fine blades are fastened in the frame and it is used for making joints around coping and for scroll work.

Cross-Cut Saws (one and two-man).—These are large heavy saws fitted with handle at one end or handles at each end so that they may be used by one or two men; these saws are used for cross-cutting heavy lumber, timbers, trees and logs. When

not in use two pieces of thin soft board, a little wider than the blade, should be fastened on each side of the blade to protect the teeth from being dulled by striking against other tools, and to prevent the blade from springing.

Dovetail Saw.—This is a small, straight, thin blade saw with fine teeth, and has a stiffening piece on the back similar to a back saw; the handle is shaped like a file handle and fits on the end of the stiffening piece; these saws are from 4 to 6 inches long, and are used for dovetailing, fine cabinet work, musical instrument work and other work where fine, close joints are required; it is a very nice handy little saw.

Hand Saw (cross-cut).—This is the most generally used saw of all others. Every woodworker from a barn-builder to the finest cabinetmaker must have a hand saw. All of the other saws described above are hand saws in the sense that they are used by hand, but this tool is always designated by the term "hand saw," and this expression as generally used applies to this saw only. It is made in 26- and 28-inch lengths, with teeth of various pitches, the 26-inch hand saws usually having 7, 8, 9, 10 and 12 points to the inch, and is used for the lighter general work—28-inch blades have 7, 8 and 9 points to the inch and is used for all kinds of cross-grain sawing. The degrees of coarseness or fineness of hand saws is expressed in "*points,*" the number being stamped on the blade near the handle; the number of points of a saw is one more than the number of teeth to the inch, for example, an "8-point saw" has but 7 teeth to the inch; there are, however, 8 interstices or spaces between the teeth to the inch and these spaces are counted as the points; sizes of hand saws are designated by the length of blade and number of points and should be given when ordering hand saws.

Rip Saw.—Rip saws are made in the same sizes as hand saws, and are used for all general ripping; the difference between a rip saw and a cross-cut saw is in the way the teeth are filed. The teeth of the cross-cut hand saw are filed at an angle of

about 45 degrees alternately; the teeth are given clearance by very decided set to opposite directions on every other tooth; the cutting part of the teeth are the sides of the points; this method of filing and setting gives the cutting part of the teeth the proper angle across the grain of the wood to make it cut and clear easily. The rip saw has the teeth spread a little at the point for clearance; the faces of the teeth are filed at right angles to the saw; the teeth are chisel-shaped and have very little set; the cutting is done in the same manner as a chisel; this saw is used for ripping with the grain.

Hack Saw.—Hack saws have specially hardened blades for cutting nails or other metal; the blade fits into an iron frame and can be renewed when broken or worn out; every carpenter should have a good hack saw in his kit for cutting nails or bolts which he may encounter while sawing with wood saws; sawing nails with wood saws will ruin them.

Keyhole Saw.—The keyhole saw consists of a small iron handle for which are provided various-sized small, slim, stiff saw blades with coarse teeth; they are used for cutting keyholes, and other small holes and circles where larger saws cannot be used.

Panel Saw.—The panel saw is a small light hand saw, 20 and 22 inches long, having teeth 9, 10 and 11 points to the inch; it is used for light small work and medium general bench work, such as joiner work, paneling, etc.

Care of Saws.—Saws should always be kept free from rust by oiling them when they are to be put away for sometime; and they should be kept properly filed; do not try to file a good saw till you are sure you know how to do it. (See page 222, about filing saws.)

Try-Square.—Is made small and handy for trying the square of surfaces while planing or fairing up with any tool; also used for laying off small work such as panel work, mortises, etc.; it is made in sizes with blades from 4 to 12 inches long; a small and large size should be kept, and much care should be taken

not to drop them or throw them about roughly, because if they should be "knocked out of true" they are useless and liable to cause the spoiling of much material by being inaccurate.

Bevel.—The bevel, or sometimes called the sliding bevel, is like a try-square except that the blade is slotted and movable about a set screw in the head; it is used for getting bevels and angles of work that is not square; this tool is much used by shipwrights and shipjoiners when the panel work, doors, etc., are not square, but built to conform to the "run of the ship" which is the angles due to the sheer fore and aft and the camber or crown of the decks athwartships. In such cases, the proper angle is ascertained, to which the bevel is to be set, and is thus used in place of the square in fitting all the parts of the work.

Steel Square.—The standard steel square has a blade 24 inches long by 2 inches wide and tongue 18 inches long by $1\frac{1}{2}$ inches wide. The best grades of this square are graduated in inches, halves, quarters, eighths, tenths, twelfths, sixteenths and thirty-seconds, has the one-hundredth scale, the brace rule, octagon rule, and the board measure or board rule, and some squares have a scale for cutting rafters. This square is used by all classes of woodworkers for every class of work large enough to require a square of this size. And when once familiar with all the tables and graduations marked on it, an ordinary mechanic can easily lay off the most complicated geometrical figures; close study should be made of this tool, where much valuable information and many useful methods will be found.

Chisels, Gouges, etc.—There are usually 8 chisels in a set, running from $\frac{1}{8}$ to 2 inches in width; the heavier are called framing chisels and are used for heavy mortising and framing; there are light, thin chisels called paring chisels used for trimming, paring and lighter work. The gouges are curved or nearly half-round, and are used for cutting or trimming round or curved holes and surfaces. A carpenter's slick is a very large, heavy chisel from $2\frac{1}{2}$ to 4 inches wide and 18 to 24 inches long;

it is used for heavy trimming and slicing where a broad axe or adze cannot be used. A chisel should never be driven with a hammer; always use a mallet; a hammer will split the wood handle of the chisel. Cold chisels are for cutting iron or other metals; every carpenter should have a few good cold chisels to cut nails, bolts or other metal or hard substances which are too hard to cut with wood chisels.

Braces and Bits.—The ratchet brace is the type in most general use; it has a ratchet in the stock so that the brace can be used for driving a bit either direction, and in close places where a complete turn of the handle cannot be made. Corner braces are specially made for boring in close places like a corner; these braces have a knuckle or universal joint in the stock to which a regular brace crank or sweep is connected, set at an angle, so that when the stock is in a vertical position the crank is at an angle which permits it to be turned freely. This tool is very handy for boring holes for pipes and electric wires in close corners. There are also bitstocks with universal joints, having a square shank to fit an ordinary brace which can be used for practically the same purposes as the corner brace.

Bits.—There are two kinds of bits in general use by carpenters: auger bits and gimlet bits, the latter sometimes called nail bits; auger bits have a screw leading point and cutting edges on the lips; the gimlet bits are twisted like a gimlet. There are usually 13 auger bits in a set running from No. 4 to No. 16, inclusive; on the shank end of each bit is a number showing the size of the bit in sixteenths, for example a No. 4 bit is $\frac{4}{16}$ or $\frac{1}{4}$ of an inch in diameter; a No. 16 bit is, of course, 1 inch in diameter. On gimlet bits the sizes are marked in 32ds of an inch, and usually run from No. 2 to No. 10, inclusive, 9 bits in all; these bits are used to bore for screws, spikes and nails.

There is an adjustable bit called an expansive or extension bit, which can be set to bore any size hole from $\frac{7}{8}$ to 3 inches;

these bits have a screw leading point and a sliding cutter is held in place on the shank by a screw, the cutter may be moved in or out, from the center, to make the desired size of hole; on the cutter are graduations to facilitate setting it without having to measure with a rule; when accuracy is desired as to size of hole, it is well, after setting the expansive bit, to try it in a piece of scrap lumber and then measure the test hole with a rule to make sure it is the right size.

The countersink is a small bit with "V" shaped head on the end, and is used for reaming screw holes to fit the heads of screws. The screwdriver bit is a short screwdriver with a square shank which can be driven with a brace; this tool provides a very rapid and efficient method of driving screws and is especially handy in boatbuilding and repairing. Various kinds of reamers for smoothing out and enlarging holes are driven with the brace. Some braces have a geared attachment for driving metal drills; such braces have also a set of chuck jaws for holding small, round twist drills; the twist drill attachment can be removed and the brace used for wood bits as well.

Spoke Shave.—The spoke shave has a double handle with a bit, similar to a plane bit, fitted to the center; it is used for smoothing uneven and round surfaces; used by wheelwrights to round up spokes of wheels; bits for this tool are made straight, concaved and convexed; it is a handy tool for chamfering corners where the chamfer does not extend the whole length of the piece.

Draw Knife.—The draw knife has a long blade beveled on one side with a handle at each end; it is used for cutting off surplus stock where a saw cannot be used, and for rounding up pieces such as small spars, poles, etc.

Marking Gage.—Is what its name implies; it is graduated from a scratch point at one end, and has a sliding guard or head which is set and held in place with a setscrew at the required distance from the scratch point; it is used to mark a line parallel to the edge of a piece of lumber. The mortise

gage is similar to the marking gage except that it has two scratch points so that both sides of a mortise or tenon may be marked at one time.

Compasses.—Compasses, sometimes called dividers, are used to draw circles and lay off the elements of the circle, or to divide lines or spaces into equal parts.

Trammels.—Trammels are a pair of points which are fastened to a strip of wood, any convenient length, to draw large circles or tram greater distances than a compass will reach.

Oilstones.—Two oilstones, fine and coarse, should be kept for use; also a variety of slips which are small stones with round edges for whetting gouges and half-round tools. Oilstones should be kept clean and covered when not in use to keep them free from grit; a gritty oilstone will harm a tool more than hours of working it in wood; always wipe off the stone and apply a few drops of clean oil before using.

The Bench.—All tools not in use should be put away in their proper place; this gives more room on the bench and also prevents injury to the tools by striking them with other tools and throwing them around or possibly having them pushed off on deck and broken or otherwise injured by falling.

Never cut the top of the bench with the tools; if you have a piece of work which requires cutting on the bench, use a piece of scrap lumber on the bench under the work; bench hooks are very handy for holding work in place while cutting on the bench with a saw. Do not nail work to the bench to hold it; bench hooks, clamps and vises are made for this purpose, and any kind of work can be held in place with these devices. When the day's work is over clean up the bench and shop neatly; clean carefully and put away in their proper places all tools that have been in use. Proper stowage or places should be made for all tools, where they should be kept at all times when not in use; the stowage for tools should be so arranged that if the ship rolls heavily at sea they will not get adrift and be injured

by being thrown against other tools, and also kept dry, especially from salt water; tools will rust much quicker, if neglected, on board ship than on shore on account of the salt air and the proximity to salt water; extra precautions, therefore, should be taken in the care of tools on shipboard; when tools are to be laid aside and not to be used for sometime, they should be thoroughly cleaned and oiled or covered with vaseline; in the case of planes and tools having many parts, they should be disassembled, all parts cleaned and oiled, and put together again before being put away.

A clean bench, clean and well-preserved tools and a neat and orderly shop is characteristic of an industrious and efficient mechanic.

Bench Stop.—Is a steel bent clip with teeth in the edge and let into the top of the bench; it is used to place lumber against to keep it from sliding while planing; it can be lowered or raised to suit various thicknesses of lumber; care should be taken to always set it low enough to prevent striking it with the plane bit when planing.

The Vise.—Is a large clamp fastened to the end of the bench to hold lumber while working it. The inside faces of the jaws should be kept smooth to prevent bruising the work, and when finished work is to be held in the vise, pieces of felt, leather or soft, smooth blocks of wood should be placed between the jaws and the work to prevent bruising it.

Miter Box.—The miter box is an open-ended box or frame with the top side open also; saw cuts are made into the sides at an angle of 45 degrees for cutting miters; cuts are also made at 90 degrees or right angle to square off the ends of pieces. A back saw is generally used with the miter box; a piece of straight stock is laid in the box and the saw run in the cuts of the sides as a guide will cut a corresponding angle.

Gluing.—Glue before being cooked should be soaked in cold water for about 6 hours, and when it is cooked, it should be about as thick as paint or a little thicker than milk. Fresh

glue, of course, is the strongest; after it has been cooked more than once it loses much of its adhesive properties; good glue will stand a strain of about 3000 pounds to the square inch. If glue becomes chilled while using it will not hold as well, and if lukewarm or cold, will not hold the ordinary strains of warping. It is best to glue up work in a warm room, and if possible, have the joining surfaces of the pieces warm also; this will keep the glue warm for several minutes after being applied, giving it time to soak into the pores of the wood: if this method of gluing is carefully followed, the glued joint will often be found to be stronger than the solid wood.

Making Joints.—In making joints, the best side of each piece should be selected for the face side, which is to present the finished side when the work is completed and put up in place, and the best edges should be selected for the joining edges; these should be marked with a pencil so they may be kept together throughout the progress of preparing the pieces for final assembly. Do not use the sap edge for a joining edge; the sap is softest, not so strong, and when glued to another piece will not hold so well.

Having selected two face sides and the best edges, straighten up the edges to be joined, using the jointer plane; this tool should be held perfectly straight and square for the whole length of the piece; take sufficient cuts to make sure that the edge is square and straight; after each cut with the plane, use the try-square to check the result until the edge is straight and square with the side; then place the pieces on the bench or on a pair of trestles, face side up. The edges should come together and touch at all points and on both sides, except that on long pieces there should be a little space in the center gradually closing to the ends; in a 10-foot piece a space of $\frac{1}{16}$ inch in the center would be about right; this space will close up tight when glued and clamped, and will hold better than if the edges had been perfectly straight; but the edges must be square, and touch on each side; a joint that does not touch on both sides

of the edges will only hold in proportion to the surface that is touching. If a joint is to be tongue and groove, place the pieces, one at a time, in the vise joint edge up and face side away from the bench; cut the tongue and groove with the matching planes; place the pieces on the bench or trestles; apply the glue and clamp together. Do not set the clamps too tight; a joint that is clamped so tight that the fibers of the wood are made to spring or compress will sometimes come loose when the clamps are removed on account of the wood springing back to its original form. If the joint is to be doweled, straighten the edges as directed above, clamp the pieces lightly together in position, and mark across the joint, with a knife edge or fine pencil, the points at which it is desired to place dowels; place one piece at a time in the vise, face side out, and with a try-square, continue the dowel lines across the edge; set a marking gage to one-half the thickness of the stock and mark lines along the center, intersecting the dowel lines across the edge; bore holes for the dowels where these lines cross; put glue on the dowels before inserting them and the pieces are ready to be glued and clamped together. A dowel pin should be, in diameter, one-third the thickness of the board, and, in length, four times the thickness of the board which is being joined together.

Making Mortise and Tenon Joints.—Pieces to be joined with mortise and tenon are usually called stiles and rails.

For example, the pieces forming the long edges of a door are the stiles; the pieces at the top, bottom, and across just below the center are the rails; these stiles and rails are mortised and tenoned to fit together; when there is a piece running up and down the center of the door and joined to the rails, it is called a mullion; the pieces that fill in between the stiles, rails and mullions are panels. All of these pieces should be gotten out about $\frac{1}{8}$ inch wider and longer than the given sizes; this is to allow for trimming and fitting. Place all stiles of the same size together, in pairs with the face side

together, and clamp them firmly. Mark the given length of the finished work on the stiles; mark on one end the width of the top rail and on the other end the width of the bottom rail. On rails of 8 inches or more, leave $1\frac{1}{2}$ inches on the outside; rails of 3 inches or less, leave $\frac{3}{4}$ of an inch; this makes the joint stronger. On rails 7 to 12 inches wide make a double tenon by cutting out one-fourth of the tenon in the center; on rails of 12 inches or more make three tenons. Mark for the panel to set in the rail; on $\frac{1}{2}$ inch lumber this is $\frac{5}{16}$ of an inch; this is the depth to plow after the tenons have been marked. Set the mortise gage to one-third the thickness of the piece to be mortised and gage from the face side; then cut the mortise as marked. Place the rails in clamps and mark the width of the finished work, allowing for the width of the stiles. Use the same gage as used on the stiles to mark the rails for tenons; keep the gage to the face side; saw the tenons now and cut to fit the mortise; plow the edges for the panels and the frame is ready to put together. When all joints have been made to fit, cut the panels to fit into the plowed groove of the edges, glue the joints, clamp together and pin the tenons. A mortise which cuts entirely through the stile is an open mortise, and should have a wedge glued and driven in from the outside; a mortise that is not cut through the stile is a blind mortise and should be glued and pinned.

A Few Suggestions to Woodworkers.—Never sandpaper a piece of wood, then expect to plane; plane first, then scrape, then sandpaper. After all plane marks have been scraped out, the surface should be gone over with coarse sandpaper and all scraper marks rubbed out. Don't sandpaper across the grain. After the coarse sandpaper use finer grades till all scratches are removed; scratches made with sandpaper by rubbing across the grain will be found harder to get out than scraper marks.

A little soap or beeswax on a screw will make it drive much easier, and when putting brass screws into oak or other hard, tough woods, a lubricant of this kind should always be used to

prevent wringing off the screws; a little larger gimlet bit, than is used for iron screws, should be used when boring for brass screws in hardwood; when a screw wrings off in the wood it is very hard to get the piece out, and is sometimes necessary to put the screw in another place. A very convenient method of having beeswax always handy to lubricate screws, is to bore a half-inch hole about an inch deep in the end of your hammer handle and keep it filled with the wax, from which a little of the wax may be taken on the end of each screw to be put in.

A depth gage for a bit may be easily made by boring a hole through a block of hardwood of sufficient length to allow the bit to project the depth of holes desired to bore.

Use machine oil (lard oil or engine oil) on the screws of iron clamps and keep them well lubricated; it makes them work easier and prevents rusting; use linseed oil on the screws of wooden clamps.

A woodworking mechanic should keep handy at all times, either in his pocket or in his kit, a good, sharp pocket knife, 2-foot rule, nail punch and lead pencil.

On finished work, don't drive a nail all the way in with the hammer; stop when the head is about $\frac{1}{16}$ of an inch from the surface and drive it the rest of the way with a nail punch, sometimes called a nail set; you will thus avoid bruising the wood with the hammer face. If the hammer face is slick and slips off the nail head badly, rub it on a piece of coarse sandpaper, a brick, or on the ground; if it is a little too round on the face, grind it till almost flat.

Secret nailing is used on finished work where nail heads must not be seen; this is done by cutting a groove with a small chisel or gouge and raising the shaving enough to drive the nail in underneath the shaving; after the nail is driven glue the shaving back in place; it is not necessary to cut the shaving out entirely; raise only one end, and be careful not to break it off. Screws may be put in the same way.

Setting plane bits: A plane bit should be set according to the kind of wood to be planed. For hardwoods, such as maple, birch or cherry, the cap of the bit should be set close to the cutting edge and both the cap and bit set close to the front edge of the throat—the throat is the slot in the block of the plane where the shavings pass through. For soft woods, such as white pine, cedar, cypress, etc., the cap should be moved back, leaving an opening of about $\frac{1}{16}$ of an inch, so that the shavings, which from these woods are thicker than from hardwood, can pass through the throat easier and prevent choking. The bit should always be very sharp and set to the proper thickness of cut, according to the kind of wood being planed. Never try to plane against the grain; in cases where it is sometimes necessary to do so, however, the plane bit should be keen as a razor and set to take a very thin cut.

OARS.

(Navy Department Specifications.)

Spoon Oars.—To be made of the best quality tough spruce, thoroughly seasoned, preferably Washington or western coast spruce, of straight and close grain, free from knots and all other defects; to be hand dressed, smoothly finished and worked to size and shape as shown in Fig. 42; oars to be hollowed out, as shown, and to be made in halves thoroughly glued together with an approved glue. Any oar selected at random from a particular lot must be capable of being submerged in salt water for 24 hours, after which it will be subjected to a temperature of 100° for 24 hours. After such test the oar must show no signs of coming apart at the glued joint. To be given two coats of shellac and one coat of the best quality spar varnish. Handle of oar to be leathered, leather to be about $\frac{1}{8}$ inch thick, chamfered on ends and neatly and securely fastened.

Straight Ash Oars.—To be made of the best quality tough white ash, thoroughly seasoned, of straight and close grain, free from knots, discolorations, streaks and all other defects.

To be hand dressed, smoothly finished and worked to the sizes specified in Table 13. Oars to be furnished with leather and copper bands.

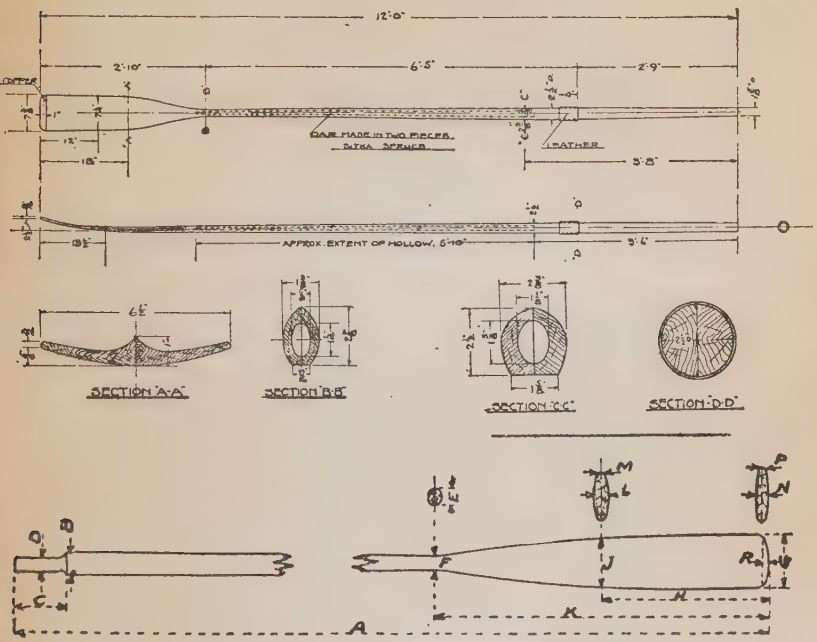

FIG. 42.—Oars.

Table 13.—Straight Ash Oars.

A		B	C	D	E	F	G	H		J	K		L	M	N	P	R
Ft.	*In.*	*In.*	*In.*	*In.*	*In.*	*In.*	*In.*	*Ft.*	*In.*	*In.*	*Ft.*	*In.*	*In.*	*In.*	*In.*	*In.*	*In.*
18	0	$2\frac{3}{4}$	9	$1\frac{1}{2}$	$2\frac{5}{16}$	$2\frac{3}{16}$	6	4	3	$5\frac{1}{2}$	6	0	$1\frac{3}{8}$	$\frac{3}{16}$	$\frac{1}{16}$	$\frac{1}{2}$	$\frac{3}{16}$	$\frac{1}{2}$
17	0	$2\frac{3}{4}$	9	$1\frac{1}{2}$	$2\frac{1}{4}$	$2\frac{1}{16}$	6	4	0	$5\frac{1}{2}$	5	8	$1\frac{5}{16}$	$\frac{3}{16}$	$\frac{1}{16}$	$\frac{1}{2}$	$\frac{3}{16}$	$\frac{1}{2}$
16	0	$2\frac{3}{4}$	9	$1\frac{1}{2}$	$2\frac{1}{16}$	2	$5\frac{3}{4}$	3	6	$4\frac{3}{8}$	5	4	$1\frac{1}{4}$	$\frac{3}{16}$	$\frac{1}{16}$	$\frac{1}{2}$	$\frac{3}{16}$	$\frac{1}{2}$
15	0	$2\frac{3}{4}$	9	$1\frac{1}{2}$	2	$1\frac{7}{8}$	$5\frac{1}{4}$	3	3	$4\frac{3}{8}$	5	0	$1\frac{3}{16}$	$\frac{3}{16}$	$\frac{1}{16}$	$\frac{1}{2}$	$\frac{3}{16}$	$\frac{1}{2}$
14	0	$2\frac{5}{8}$	$8\frac{1}{2}$	$1\frac{1}{2}$	$1\frac{7}{8}$	$1\frac{3}{4}$	$5\frac{1}{4}$	3	0	$4\frac{1}{2}$	4	8	$1\frac{1}{8}$	$\frac{3}{16}$	$\frac{1}{16}$	$\frac{1}{2}$	$\frac{3}{16}$	$\frac{1}{2}$
13	0	$2\frac{5}{8}$	$8\frac{1}{2}$	$1\frac{1}{2}$	$1\frac{7}{8}$	$1\frac{3}{4}$	$5\frac{1}{4}$	2	9	$4\frac{1}{2}$	4	4	$1\frac{1}{16}$	$\frac{3}{16}$	$\frac{1}{16}$	$\frac{1}{2}$	$\frac{3}{16}$	$\frac{1}{2}$
12	0	$2\frac{1}{2}$	$8\frac{1}{2}$	$1\frac{1}{2}$	$1\frac{3}{4}$	$1\frac{5}{8}$	$5\frac{1}{4}$	2	6	$4\frac{1}{2}$	4	0	$1\frac{1}{16}$	$\frac{3}{16}$	$\frac{1}{16}$	$\frac{1}{2}$	$\frac{3}{16}$	$\frac{1}{2}$
11	0	$2\frac{1}{2}$	6	$1\frac{1}{2}$	$1\frac{5}{8}$	$1\frac{1}{2}$	$5\frac{1}{4}$	2	3	$4\frac{1}{2}$	3	8	$1\frac{1}{16}$	$\frac{3}{16}$	$\frac{1}{16}$	$\frac{1}{2}$	$\frac{3}{16}$	$\frac{1}{2}$
10	0	$2\frac{3}{8}$	6	$1\frac{3}{8}$	$1\frac{9}{16}$	$1\frac{7}{16}$	$5\frac{1}{4}$	2	0	$4\frac{1}{2}$	3	4	1	$\frac{3}{16}$	$\frac{1}{16}$	$\frac{7}{16}$	$\frac{3}{16}$	$\frac{1}{2}$
9	0	$2\frac{1}{8}$	5	$1\frac{3}{8}$	$1\frac{1}{2}$	$1\frac{3}{8}$	$5\frac{3}{8}$	1	9	$4\frac{1}{2}$	3	0	1	$\frac{3}{16}$	$\frac{3}{8}$	$\frac{3}{16}$	$\frac{1}{2}$	

POSITION BUOY.

Sometimes called towing spar or fog spar; used for towing astern at night or in foggy weather, to enable ships in formation to keep the proper distance apart. The buoy dragging on the surface of the water makes a splash of spray which is easily seen at night or in a fog; the distance between ships being regulated by the length of line with which the buoy is towed. The towing line for this buoy should be fitted with a swivel.

SPAR ANCHOR BUOYS.

To be made of spruce or Oregon pine in one piece, 8 inches diameter, 4 feet long, smoothly finished. The ends to be rounded to a 2-inch radius. To have a 1½-inch hole 6 inches from one end; the hole to be scored to the near end and the edges chamfered to prevent chafing. To have a seizing of 8 turns of ⅜-inch seizing wire put on each end of the buoy to prevent splitting. All details to be as per sketch incorporated in and forming part of these specifications.

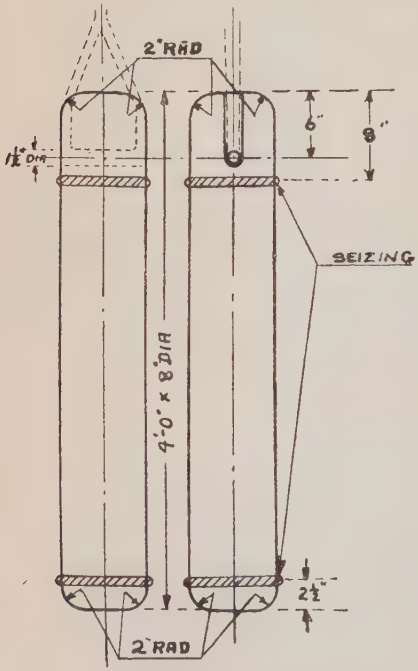

FIG. 44.

To be given a coat of slate-colored priming for boats, when manufactured; final painting to be done by ship's force. All spar anchor buoys used with the starboard anchor to be ultimately painted chrome green; all used with the port anchor to be painted vermilion red.

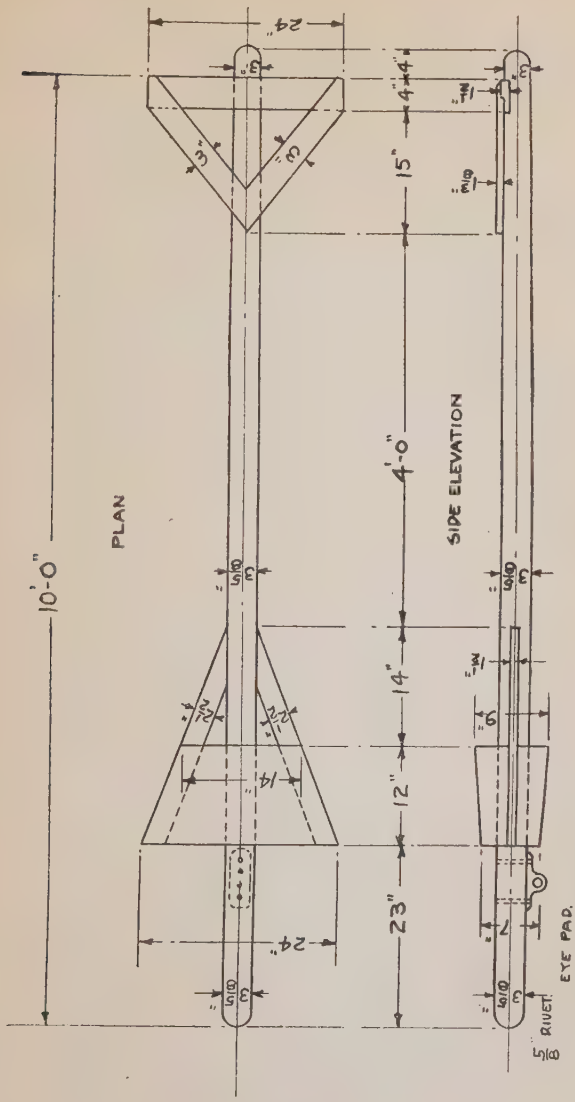

FIG. 43.—Position Buoy.

CHOPPING BLOCKS FOR KINDLING WOOD.

To be made of sound live oak, free from rot, unsound, loose, or hollow knots, in one solid piece, supported on two wood

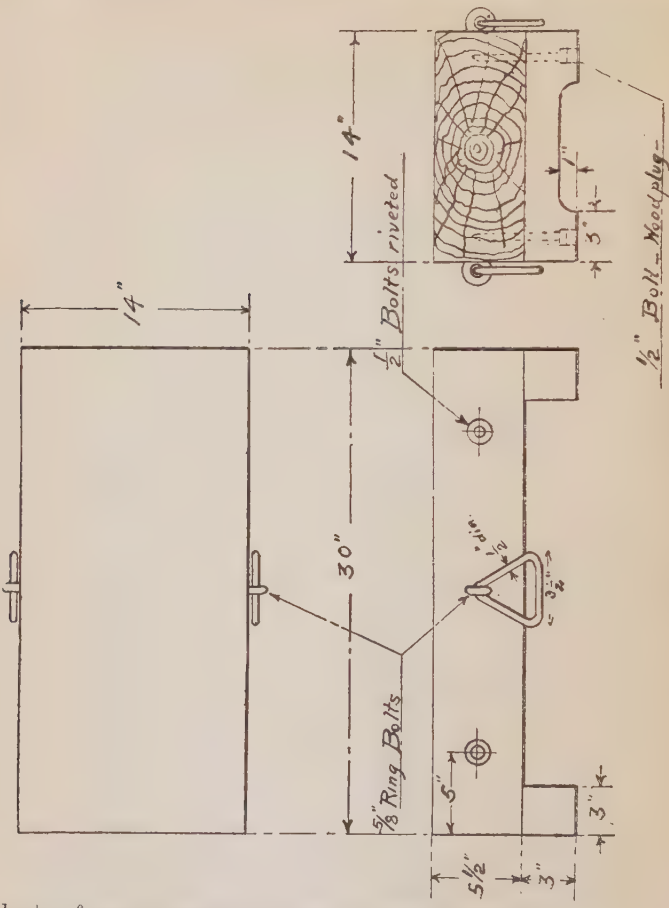

FIG. 45.—Chopping Block.

cleats of same material; to be in general conformance in size, fittings, etc., with sketch, Fig. 45.

The blocks will be fitted with two $\frac{5}{8}$-inch ring bolts 5 inches long, fitted with either cylindrical rings or triangular steel

links for lashings; ½-inch riveted steel bolts with washers to be fitted, for strength and to prevent checking. Bolts securing cleats to be set in; cleats to be counterbored for ⅝-inch wood plug, and the bolts for cleats to be not less than 5 inches in length.

COALING TRUCKS.

General.—To be made of high-grade material, of good workmanship, and free from any defects which may affect the serviceability of the truck.

Plans.—To be in accordance with the plan, Fig. 46. The various parts shown to be in accordance with the following:

Metal Work.—All metal parts to be made of high-grade iron and steel, except where otherwise specified. All unfinished surfaces, except handle, to be painted with a durable black paint.

Woodwork.—All wood parts to be made of oak, free from knots and shakes, and to be smoothly dressed and shellacked.

Platform.—To be made of oak and consist of three boards, 1⅞ inches thick and 5 feet long; the minimum width of the center board to be not less than 5 inches, and the outer boards to be not less than 6 inches wide. The three boards to be held together by two oak cleats, 4 inches wide and 1 inch thick. Cleats to have chamfered edges and be secured to the underside of the platform across the full width of same by six ½-inch carriage bolts per cleat, spaced two bolts per cleat through each board. Bolts to be provided with washers and have heads flush with surface of platform.

Wheels.—To be made of malleable cast iron and to be provided with brass bushings, oil holes and oil grooves. The rims and hubs of wheels to be machine-finished as indicated. The entire casting to be free from flaws or imperfections which may affect the appearance or serviceability of the wheels.

Bolsters.—To be made of oak. Front and rear bolsters to be secured to the underside of platform directly over each axle by two ½-inch carriage bolts per bolster through each

board, excepting the board through which the kingbolt passes, in which case the board shall be secured to the front bolster with two $\frac{1}{2}$-inch lag screws. The bolts to be spaced so that the center is not less than 1 inch nor more than $2\frac{1}{2}$ inches from the adjacent side of the board. The bolster on forward axle to be secured to same by four $\frac{1}{2}$-inch carriage bolts with heads flush with upper surface of bolster; to be of such height as to give a clearance over forward wheel of over $\frac{3}{4}$ inch. The front and rear bolsters and the rear axle to be drilled for securing bolts to suit the platform boards.

Axles.—The front and rear axles to be bar iron or steel forgings true to size and shape. Collars on axles to be bored and shrunk onto journals. Journals to be finished as indicated. Rear axle to be secured to bolster and platform by four through bolts $\frac{1}{2}$ inch in diameter.

Braces.—Front bolster braces and rear bolster braces to be made from flat rolled iron or steel 2 by $\frac{1}{2}$ inches thick. Front bolster to be further reinforced by a steel angle, 2 by 2 by $\frac{1}{4}$ inches thick. Bolts securing braces must be located as indicated.

Handle.—Handle to be a smooth bar iron or steel forging, 1 inch in diameter, forged true to size and shape, and be provided with a $\frac{1}{2}$-inch bolt. Handle brackets to be made from flat rolled bar iron or steel, $\frac{1}{2}$ by $1\frac{1}{2}$ inches, and be secured to each other and to front axle bolster by $\frac{1}{2}$-inch bolts. Bracket brace to be made of $\frac{1}{2}$ by 1-inch bar iron or steel, and be secured to front axle bolster by kingbolt.

Turntable.—To be made of malleable cast iron and to be provided with a concentric groove $\frac{3}{4}$ inch wide by $\frac{1}{16}$ inch deep for lubricant, a kingbolt hole $1\frac{1}{16}$ inches in diameter and two $\frac{1}{4}$-inch holes countersunk for 0.242-inch flathead wood screws. Bearing surfaces to be machine-finished as indicated.

Kingbolt.—To be made of steel, 1 inch in diameter, and to be provided with iron or steel washers $\frac{3}{16}$ inch thick by 3 inches square.

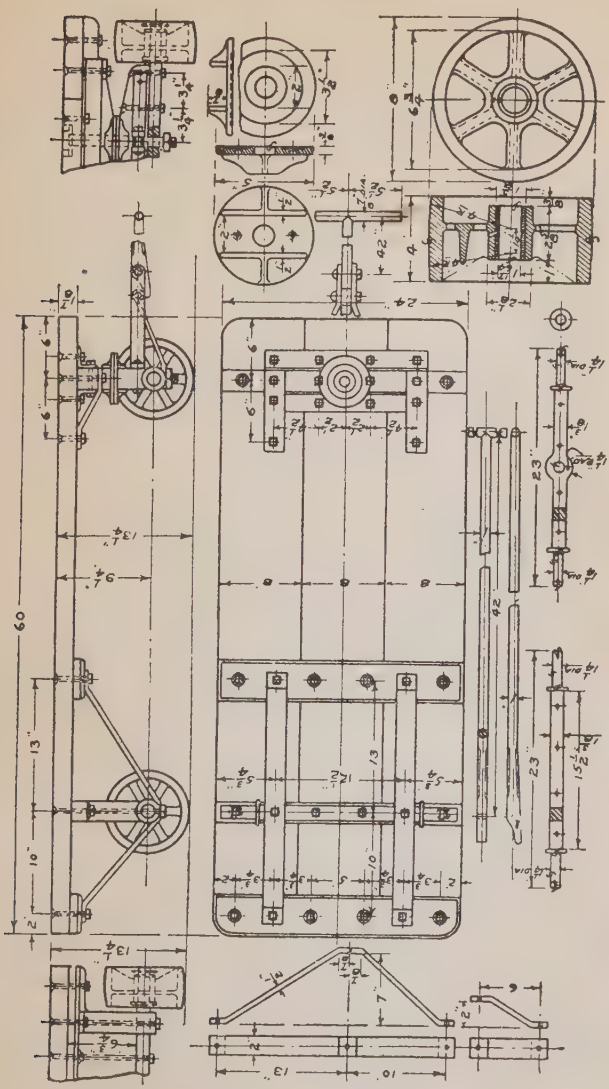

FIG. 46.—Coaling Truck.

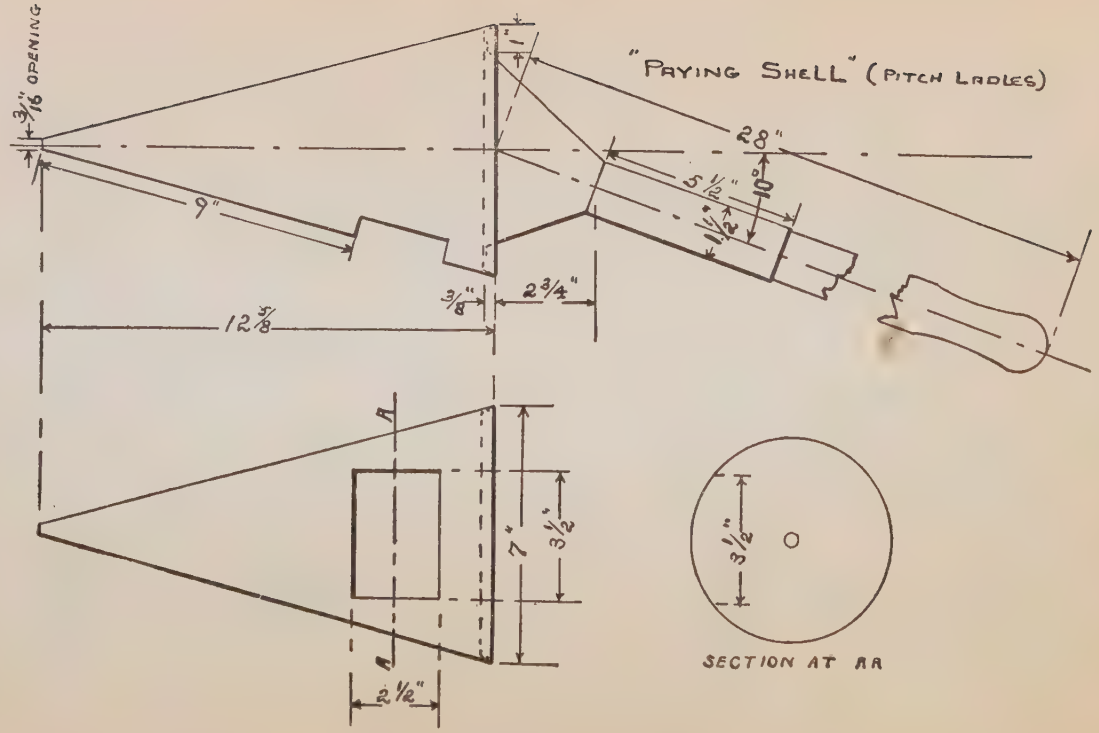

FIG. 47.—Paying Shell (Pitch Ladle).

To be made of No. 24 U. S. gage galvanized iron, and closely riveted. Handle to be of strong wood.

HASPS AND STAPLES FOR WOOD CHESTS.

Material.—Hasps and staples shall be naval brass (composition *N-c*) castings; hinge pins shall be made of brass rod.

Components.—Hasps and staples will be ordered in sets; each set shall consist of the following parts, and shall be complete and in perfect working order:

One hasp.

One staple.

Eight brass wood screws, flat head, No. 14 by 1 inch.

Plans.—The shape, design and arrangement and countersinking of screw holes of hasps and staples shall be in accordance with the plans, Fig. 48. These plans give the general dimensions of each part, which must be adhered to strictly in so far as position of screw holes and all other parts that require cutting and fitting of the woodwork are concerned, so that any part may be immediately replaced by any other similar part purchased under the same specifications without any additional cutting or fitting of the woodwork.

Purposes.—These hasps and staples are intended for use on deck chests, boat chests, chests for inflammable liquids, chests for inflammable medical stores, etc.

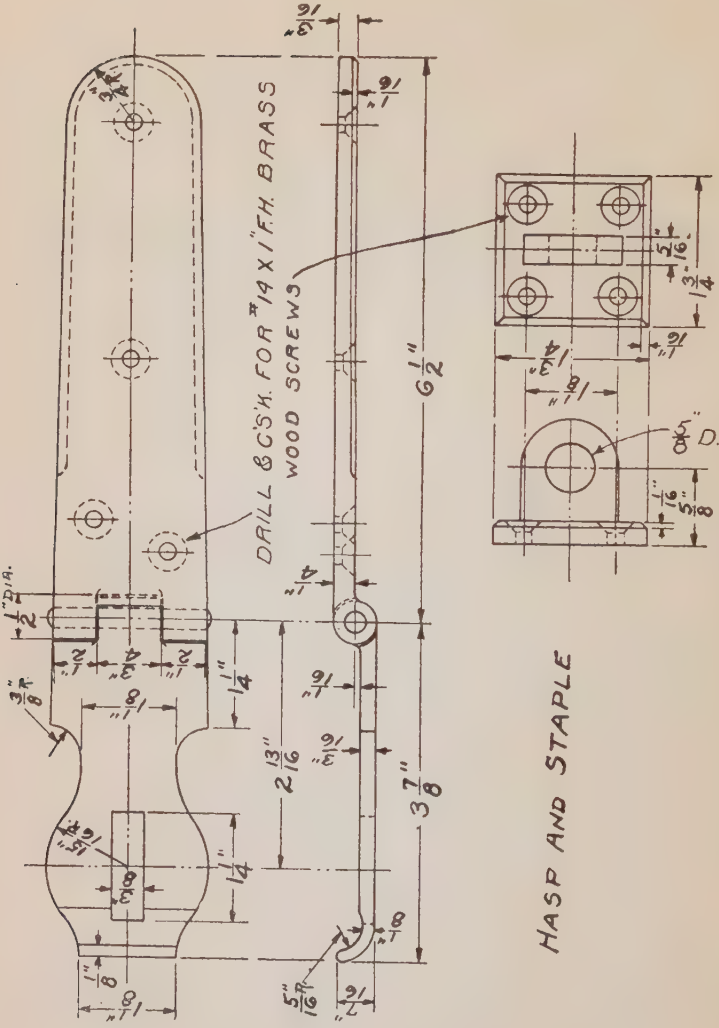

FIG. 48.—Hasp and Staple.

LUMBER.

The various kinds of lumber used in the Navy may be divided into two general groups; namely, pine and hardwood. Pine is also classed as an evergreen wood, meaning that the leaves do not die and fall off in winter; the other evergreens much used as lumber, in the Navy, are spruce, hemlock, cedar, cypress, etc. The hardwoods are ash, beech, birch, oak, maple, hickory, poplar, mahogany and many others.

Hardwood is a trade name and does not necessarily mean that the wood is hard, but that it comes from a tree which is not an evergreen.

Evergreens.

White Pine.—This is a light, soft, straight-grained wood, slightly yellowish in color; is not very strong, but is a good wood for interior finishing in cabins and state rooms, a most excellent material for pattern making, being easy to work and holds glue well; good for plugs or wedges to stop leaks on account of swelling, when wet, more than other woods. White pine weighs from 25 to 30 pounds to the cubic foot.

Yellow Pine.—Sometimes called longleaf pine, hard pine, pitch pine, Georgia pine, etc. It is found along the South Atlantic and Gulf Coast of the United States. Loblolly and Cuban pine are also included sometimes under this head. This wood is strong and hard, an excellent material for heavy framing timbers and floors in buildings. In the Navy it is used for decking on large ships; for risings, flooring, gun platforms, etc., in small boats, and for miscellaneous heavy work of all kinds. Weighs from 40 to 45 pounds per cubic foot.

Short-Leaf Pine.—Sometimes called second-growth or Carolina pine; it is lighter, not so strong or durable as longleaf; the fiber is softer and the grain coarser than hard pine; it splits very easily and is only used for the cheapest work; rarely ever used on ships of the Navy. Weighs about 32 pounds per cubic foot.

Sugar Pine.—Sometimes called Western pine; is straight grained, soft; is easily worked, resembling white pine somewhat

when finished; a very good lumber for interior housework; not much used on ships of the Navy. Weighs about 22 pounds per cubic foot.

Buil Pine.—Also called California yellow pine; has a closer grain than most other pines—is very resinous, and quite a good strong wood for framing purposes. Weighs about 29 pounds per cubic foot.

Douglas Fir.—Also called Oregon pine; is an excellent lumber for structural purposes, and is used almost exclusively on the Pacific coast, for the same classes of work as the hard pines are used on the Eastern coast. Weighs 32 pounds per cubic foot.

Spruce.—There are black spruce, white spruce, Norway spruce and others. Spruce is a strong, tough wood, an excellent material for joists, studs and general rough framing; it is much used for piles, submerged cribs, cofferdams, etc. The tough, straight grain of spruce makes it an excellent material for masts and spars of ships, the straight spruce poles being used with as little cutting down as possible. Weighs 30 pounds per cubic foot.

Balsam Fir.—Sometimes called single-spruce; is very similar in appearance to other kinds of spruce except that it is lighter in color and inferior in quality; is very brittle and splits easily. Weighs 23 pounds per cubic foot.

California White Fir.—Also called silver balsam; is not very strong and quite soft; used mostly for box lumber. Weighs about 22 pounds per cubic foot.

California Red Fir.—Also called Shasta fir; is soft, not very strong, but is rather close grain and durable in the soil; it is much used for bridge timbers and general building purposes. Weighs about 29 pounds per cubic foot.

Hemlock.—Hemlock is somewhat similar, in appearance, to spruce though much inferior as a building material; it is brittle, liable to be shaky, and splits easily; it has a coarse, uneven grain, and while it holds nails quite well, is generally

soft and not considered durable; it is used mostly for rough framing timber. Weighs about 28 pounds per cubic foot.

White Cedar.—Is a soft, fine-grained durable wood, but is not very strong or tough. It is an excellent material for planking small boats, and is much used for this purpose in the Navy. Weighs about 25 pounds per cubic foot.

Red Cedar.—Has a reddish-brown color; is somewhat similar in texture to white cedar, but is stronger and more durable; it cannot be had in as wide pieces as the white cedar because it is a much smaller tree. On account of its durability it is an excellent material for posts, sills, sleepers and timbers placed in contact with the ground or near it. Red cedar posts will last for years, in the ground, without showing signs of rot. It has a very pungent odor which repels insects; it is therefore an excellent material for the shelving and drawers of clothes closets, and for chests in which clothing, furs, etc., are to be kept free from moths and other insects. Weighs about 30 pounds per cubic foot.

Cypress.—Cypress is somewhat similar in texture and appearance to white cedar, being tougher, however, and of a slightly darker color; it is an excellent material for planking small boats for which it is much used in the Navy; it is also used on some classes of joiner work. In house building it is extensively used for shingles and weather boards, also for interior finish. Looks well under stains or in natural color varnished. Weighs about 35 pounds per cubic foot.

Hackmatack or American Larch.—Also sometimes called Tamarack; is used principally for obtaining natural growth knees for ships and boat building; the knees are made by cutting out a part of the lower trunk, retaining the projected root to form the arm of the knee; these pieces are very strong, being formed by the natural growth of the roots from the body of the tree. They are shaped and fitted under beam-ends and other places where angular bracing is required. Hackmatack is very resinous and quite a durable wood; it does not rapidly rot; even

when in water, or damp, it warps very badly, however, and is not therefore well suited for planks.

Redwood.—The giant trees of California, growing to heights of 200 to 300 feet. It is dull red in color, and while the texture of this wood resembles pine somewhat, and is used generally in the West for the same purposes as pine is used in the East, it is inferior to pine on account of its softness, liability to splinter, and because it shrinks very badly. Weighs about 26 pounds per cubic foot.

Hardwoods.

Ash.—There are three kinds: white, red and black ash; the white ash is in most general use in the Navy for the following purposes: Thwarts, side benches, gratings, stretchers, stern benches and other interior fittings of small boats, oars, accommodation ladders, mess tables, built-in tables in galleys and scullerics, etc., where wood work is scrubbed without painting or varnishing. Ash is very hard and tough; its grain is course and it resembles oak somewhat in texture, strength and hardness. It is sometimes used for furniture or cabinet work and may be stained to closely resemble oak; but its tendency after a few years to become dry and brittle makes it less desirable for structural work. Weighs from 40 to 50 pounds per cubic foot.

Oak.—There are white, red, black, pin, live, English oak, water oak and many others. White oak, however, is most extensively used in the Navy; it is hard and tough, cross-grained, very strong, and of a light yellowish-brown color; it is used where great strength and durability are required, as in shipbuilding, cooperage, wagon making, etc. The structure of the fiber, when quarter sawed, makes a beautiful grain on interior finishing, cabinet work and furniture. In the Navy, white oak is used for framing, chafing, battens, capping, etc.; for small boats, furniture, cabinet making, cooperage, etc. Weighs 50 pounds per cubic foot.

Red Oak.—Similar in most respects to white oak, except as to grain and color, the grain being finer and closer, and the

color darker and redder than white oak; it is somewhat softer than white oak. Weighs about 45 pounds per cubic foot.

Hickory.—The hardest, toughest and strongest of all American woods; it is used in the Navy for making tool handles of all kinds. Weighs about 51 pounds per cubic foot.

Cherry.—Is a hard and durable wood, having a fine, close grain, takes a high polish, and is therefore much used in cabinet work; it is very adaptable to imitations of more valuable woods; staining it black makes a good imitation of ebony; it may also be stained to an excellent imitation of mahogany. It is largely used for book cases, pianos, furniture and general cabinet work, which is turned out in quantity and stained afterwards to imitate various materials. Weighs about 36 pounds per cubic foot.

Birch.—Resembles cherry somewhat in texture and color, though of a slightly lighter color. Birch, like cherry, is well adapted to imitations of mahogany and other woods by staining. It is much used in the Navy for making ditty boxes. Weighs about 47 pounds per cubic foot.

Maple.—Is a light-colored, fine-grained, strong, hard wood; it takes a high polish; is used for interior finish in houses and makes fine flooring. Weighs about 43 pounds per cubic foot.

Beech.—Is very hard, tough, and has a close uniform texture, which makes it desirable for tool handles, plane stocks, etc.; it is not much used for building on account of its tendency to rot in damp places; it takes a high polish and is sometimes used for making furniture, but is too brittle for delicate work requiring strength. Weighs about 42 pounds per cubic foot.

Poplar.—Is soft and brittle, and shrinks badly when drying; it also warps and twists very badly in the slightest changes of atmosphere. It is cheap; has very few knots or other defects; it works easily, and the boards may be got in exceedingly wide sizes; it is generally used on miscellaneous light, plain work, false backs, filling, etc. Weighs about 26 pounds per cubic foot.

Sycamore.—Also sometimes called button wood; is hard, of a light brown color, and very brittle; has a fine, close grain, and

will take a good polish; it is hard to work, shrinks, warps and twists very badly; it is not a good material for joiner work or general carpentry. It is best adapted for veneer work when used for interior trim. Weighs about 35 pounds per cubic foot.

Mahogany.—A hard, close-grained wood difficult to split and takes a high polish. In color it is a deep, rich red; it works nicely in joiner, cabinet and furniture work; it is the material used in making the most expensive furniture. It is an excellent wood for making turned patterns; it is used in the Navy for cabin furniture, chronometer cases and the finer grades of cabinet work. Weighs about 46 pounds per cubic foot.

Teak.—A heavy, strong wood found in India; it is a yellowish-brown color and is straight and even grained; it does not split or warp easily, and is very easily worked. It is an excellent material for decks, railings, deck and hatch margins, etc., and is used for this purpose in the Navy. Weighs about 50 pounds per cubic foot.

Lignum-Vitæ.—An excellent hard, close-grained wood; in color it is a dark brown with lighter brown markings; it is very resinous and difficult to split. It is used in the Navy for making clump blocks, sheaves for blocks and used as lining for outboard shaft bearings. Weighs about 68 pounds per cubic foot.

RULES FOR PILING LUMBER.

(Furnished by the Forest Service of the Department of Agriculture.)

Foundations (Endwise or Sidewise Piling).

The foundations should be strong, solid and durable.

The top of each foundation should be level, and from front to back the top surface of the parallel skids should be in alignment, so that the lumber to be piled will bear equally upon each one.

The front foundation should be raised above the second, and the second above the third, to allow a slant in the stack of 1 inch to every foot.

The foundation should be spaced not over 4 feet apart, except for heavy planks and timbers.

The front foundation should be of sufficient height to provide space for free circulation of air under all parts of the pile.

Lumber (Endwise Piling).

Skids, preferably 2 by 4 inches, should be laid on top of the foundations.

Boards, preferably of equal length, should be piled together.

The ends of the boards should rest upon the front and rear skids.

A space of approximately $\frac{3}{4}$ inch should be left between boards in the same layer.

Lumber piled in the open should have the front ends of boards in each layer slightly protruding beyond the end of the layer beneath, in order to provide a forward pitch to the stack.

Lumber (Sidewise Piling).

Skids, preferably 4 by 6 inches, should be placed across the foundations at about 4-foot intervals. The number of skids depends upon the thickness of the lumber.

Boards of equal length should be piled together.

The boards should be placed on the skids with about $\frac{3}{4}$ inch between boards in the same layer.

Lumber piled in the open should have the front board in each layer project slightly beyond the board in the layer beneath, to provide a forward pitch to the stack.

Stickers (Endwise or Sidewise Piling).

Stickers should be of uniform thickness, preferably $\frac{7}{8}$ inch for 1-inch lumber, and $1\frac{1}{2}$ inches for 2-inch lumber. Their length should be a few inches in excess of the width of the pile.

Stickers should be placed upon the layer of boards immediately over the skids and kept in alignment parallel to the front of the piles.

The front and rear stickers should be flush with or protrude beyond the ends of the boards.

Roof Protection (Endwise or Sidewise Piling).

Cover boards, as a roof protection, should be laid on the top of the pile, extending a few inches beyond the front and rear ends of the stack.

Spacing Stacks (Endwise and Sidewise Piling).

Space between the piles should not be less than 2 feet and increased to 4 or 5 feet if yardage conditions allow.

Dimensions of Stack (Endwise or Sidewise Piling).

The customary width of stacks is from 4 to 8 feet.

The height is governed by the size and character of the lumber and by the methods of moving it.

Treated ends (endwise or sidewise), lumber $2\frac{1}{2}$ inches thick or over, unless of the lower grades, should have the ends treated with a brush treatment of paint or some liquid filler.

BOARD MEASURE.

A "*board foot,*" which is 1 foot square and 1 inch thick, is the commercial unit of lumber, and is computed as follows: Multiply width in inches by thickness in inches; multiply this product by length in feet, and divide this last product by 12; this will give the number of board feet in the piece. A board foot contains 144 cubic inches. A piece of lumber known to contain a certain number of cubic inches, the board feet may be obtained by dividing this number by 144. A cubic foot contains 12 board feet.

Examples: How many feet of lumber in 8 pieces $4'' \times 6'' \times 20'$ long? $6 \times 4 = 24$, $24 \times 20 = 480 \div 12 = 40 \times 8 = 320$ board feet.

How many board feet in a round piece 10″ diameter 40″ long? Area of $10'' = 78.54'' \times 40 = 3141.60$ cubic inches $\div 144 = 21.5$ board feet.

Table 14.—Showing Number of Board Feet in Various Lengths and Sizes of Lumber.

Size in inches.	Lengths in feet.							
	10	12	13	14	16	18	20	22
1 x 2	1⅔	2	2⅙	2⅓	2⅔	3	3⅓	3⅔
1 x 3	2½	3	3½	3½	4	4½	5	5½
1 x 3½	2 11/12	3½	3 13/24	4 1/12	4⅔	5¼	5⅚	6 5/12
1 x 4	3⅓	4	4⅓	4⅔	5⅓	6	6⅔	7⅓
1 x 5	4⅙	5	5 5/12	5⅚	6⅔	7½	8⅓	9⅙
1 x 6	5	6	6½	7	8	9	10	11
1 x 8	6⅔	8	8⅔	9⅓	10⅔	12	13⅓	14⅔
1 x 9	7½	9	9¾	10½	12	13½	15	16½
1 x10	8⅓	10	10⅚	11⅔	13⅓	15	16⅔	18⅓
1 x12	10	12	13	14	16	18	20	22
1 x13	10⅚	13	14 1/12	15⅙	17⅓	19½	21⅔	23⅚
1 x14	11⅔	14	15⅙	16⅓	18⅔	21	23⅓	25⅔
1¼x 3	3⅛	3¾	4 1/16	4⅜	5	5⅝	6¼	6⅞
1¼x 4	4⅙	5	5 1/12	5⅚	6⅔	7½	8⅓	9⅙
1¼x 5	5 5/24	6¼	6 23/24	7 7/24	8⅓	9⅜	10 5/12	11 1/24
1¼x 6	6¼	7½	8⅛	8¾	10	11¼	12½	13¾
1¼x 8	8⅓	10	10⅚	11⅔	13⅓	15	16⅔	18⅓
1¼x 9	9⅜	11¼	12 3/16	13⅛	15	16⅞	18¾	20⅝
1¼x10	10⅓	12½	13 5/24	14 7/12	16⅔	18¾	20⅚	22 11/12
1¼x12	12½	15	16¼	17½	20	22½	25	27½
1½x 6	7½	9	9¾	10½	12	13½	15	16½
1½x 8	10	12	13	14	16	18	20	22
1½x10	12½	15	16¼	17½	20	22½	25	27½
1½x12	15	18	19½	21	24	27	30	33
1½x14	17½	21	22¾	24½	28	31½	35	38½
1½x16	20	24	26	28	32	36	40	44
1½x18	22½	27	29¼	31½	36	40½	45	49½
2 x 3	5	6	6½	7	8	9	10	11
2 x 4	6⅔	8	8⅔	9⅓	10⅔	12	13⅓	14⅔
2 x 9	15	18	19½	21	24	27	30	33
2 x10	16⅔	20	21⅔	23⅓	26⅔	30	33⅓	36⅔
4 x 4	13⅓	16	17⅓	18⅔	21⅓	24	26⅔	29⅓
5 x 5	20⅚	25	27 1/12	29⅙	33⅓	37½	41⅔	45⅚
6 x 6	30	36	39	42	48	54	60	66
8 x 8	53⅓	64	69⅓	74⅔	85⅓	96	106⅔	117⅓
8 x10	66⅔	80	86⅔	93⅓	106⅔	120	133⅓	146⅔

Table 15.—Shipping Weights of American Lumber.

(Rough lumber in pounds per 1000 feet board measure.)

Ash, black	3,200	Hemlock	3,000
Ash, white	3,500	Hickory	4,500
Basswood	2,500	Longleaf pine	3,000
Beech	4,000	Mahogany	3,500
Birch	4,000	Maple, soft	3,000
Butternut	2,500	Maple, hard	3,900
Cherry	3,800	Oak	3,900
Chestnut	2,800	Poplar, yellow	2,800
Cottonwood	2,800	Shortleaf pine	4,200
Douglas, fir	3,300	White pine	2,500
Elm, rock	3,800	Yellow pine	4,500
Elm, soft	3,000	Sycamore	3,000
Gum, red	3,300	Tupelo	2,800
Gum, Sap	3,000	Walnut	4,000

The following are extracts from Instructions for Timber Inspectors under the Bureau of Construction and Repair:

Quality of Manufacture.—All material shall be well manufactured, sawed full to thickness, and shall have parallel edges and square ends, unless otherwise specified.

Seasoning.—Where the seasoning required is not specified, unseasoned lumber may be accepted by the inspector. Instructions have been issued by the Bureau of Construction and Repair to utilize the following terms to designate the various moisture conditions in lumber. The following should govern the inspection of material ordered under these several terms:

Green.—Wood which is practically in the same moisture condition as when cut from live timber. The essential point is that no shrinkage shall have taken place.

Shipping Dry.—Subjected to preliminary drying to reduce freight charges. An indefinite term, covering a wide range in moisture content. Shipping dry is a temporary condition.

Air Dry.—Wood which has reached a moisture content that is in equilibrium with the average condition of the atmosphere without exposure to artificial heating. The per cent of moisture varies with climate conditions and local conditions. One-inch oak stock generally requires from one to one and one-half years to thoroughly air dry, while 2-inch stock averages double that time.

Kiln Dry.—Wood which has been dried in a kiln or by artificial heat to a moisture content below 10 per cent. In case doubt exists in the inspector's mind as to whether the material is seasoned as required by the contract, the inspector shall obtain from the contractor or subcontractor a written statement as to the length of time and process used in drying the material.

Special Manufacture.—In the inspection of manufactured lumber and timber, such as cypress, white cedar, oak plank, or flitches, sawn and hewn timber, the material as a whole must be fully up to the grade specified. If by measuring off a

defect a piece can be accepted under the specifications, the inspector may use his discretion as to the acceptance of such a piece. The piece if accepted must, however, have the defective portion plainly marked off. In no case, however, will defects be measured off or cut off by the inspector as a general proposition for the purpose of raising the grade. Contractors or subcontractors will be required to place decking and similar manufactured lumber under shelter, protected from the weather until inspected and loaded onto cars.

Definitions.—The following definitions should govern in the inspection of lumber and timber under these instructions:

Standard defects in lumber are knots, knot holes, splits, checks, wane, dote, rot, rotten streaks, pin and worm holes, dog, rigger or picaroon holes, pitch pockets, solid pitch, shakes of any description, stained heart, loose or rotten heart, sap, sap stain, chipped, loose, or torn grain, and imperfect manufacture. Limitation of defects to be as specified by leaflet specification.

Knots.—Shall be classified as pin, small, standard and large, as to size; round and spike as to form; and sound, loose, encased, pitch and rotten as to quality. A pin knot is sound and not over $\frac{1}{2}$ inch in diameter. A small knot is sound and not over 1 inch in diameter. A standard knot is sound and not over $1\frac{1}{2}$ inches in diameter. A large knot is sound and any size over $1\frac{1}{2}$ inches. A round knot may be oval or circular in form, and the mean or average diameter shall be considered in applying these rules. A spike knot is one sawn in a lengthwise direction. A sound knot is one solid across its face, as hard as the wood it is in, and so fixed by growth or position that it will retain its place in the piece. A loose knot is one not held firmly in place by growth or position. An encased knot is one surrounded wholly or in part by bark or pitch. A pitch knot is a small sound knot with a pitch hole in the center.

Pitch.—Pitch seams or pitch shakes are well-defined openings containing more or less pitch, either granulated or liquid. A pitch seam may occur between the annular rings or it may

be a separation of the fibers, causing the seam to run at any angle to the annular ring. Pitch seams must not be confused with pitch pockets; they are separate and distinct defects.

Pitch Pockets.—A pitch pocket is a well-defined local accumulation of pitch occurring between the annular growths at any place in the piece. A large pitch pocket is one which is ½ inch and over in open width and over 8 inches in length. A medium pitch pocket is one which is ⅛ inch open in width, over 4 inches in length, and not exceeding 8 inches in length. A small pitch pocket is one which is less than ⅛ inch open in width, and not exceeding 4 inches in length. A pitch pocket showing open on both sides of the piece shall be considered the equivalent of a knot hole. Solid pitch is the wood saturated with pitch and will not be admitted in the upper grades.

Shakes.—A shake is a fissure or fracture in the wood caused by the growth, wind, or in felling the tree, etc. Great care must be exercised in inspecting shakes, as they are defects of a deceptive nature.

Wane.—Wane is bark or lack of wood on edges of lumber from any cause.

Rot.—The presence of rot is indicated by a decided softness of the wood where it is discolored. Discoloration of heart wood or stained heart must not be confused with rot or rotten streaks.

Checks and Splits.—Checks are openings in the grain of the wood caused by shrinkage of the material in process of drying. Material having excessively deep, or crooked checks (due to grain), and check showing through must be rejected. Splits in the end of the board, unless otherwise specified *in leaflet specifications,* must not exceed 1 inch in length for each inch in width, nor deviate more than 1 inch in 1 foot.

Grain.—Vertical grain, sometimes known as edge grain, has the grain at approximately right angles to the face of the board. Variations allowed 45° to 90°. Straight grain has the

grain running at or nearly parallel to the edges. Variation allowed, in coarse-grain material, a slope of 1 grain in 10; in medium-grain, 1 grain in 15; in close-grain, 1 grain in 20 (in length of piece). Chipped grain is part of the surface chipped or broken out in small particles below the line of the cut, and as usually found should not be classed as torn grain and should be considered a defect only when it unfits the piece for the use intended. Torn grain consists in a part of the wood being torn out in dressing. It occurs around knots and curly grain and is of four distinct characters: Slight, medium, heavy and deep. Slight torn grain should not exceed $\frac{1}{32}$ inch in depth: medium, $\frac{1}{16}$ inch; and heavy, $\frac{1}{8}$ inch. Any torn grain more than $\frac{1}{8}$ inch deep shall be termed deep. Loosened grain consists of a point of one grain being torn loose from the next grain. It occurs on the heart side of the piece and is a serious defect in flooring or decking.

Imperfect Manufacture.—Variations in sawing that render the piece too thin to dress within $\frac{1}{8}$ inch S1S, or $\frac{3}{16}$ inch S2S of the specified thickness up to 2 inches thick, or $\frac{1}{4}$ inch in width up to 12 inches S1S or $\frac{1}{2}$ inch S2S: material $\frac{1}{4}$ inch thicker or $\frac{1}{2}$ inch wider than specified will be received at the next regular lower size, or rejected.

Sap, Sap Wood.—Sap is the fluid which circulates in plants and consists of water carrying in solution the various nutritive salts needed for the life or propagation of the tree. Sap wood constitutes a woody cylinder between the bark and the heart wood and carries the sap. Each year the inner portion of the sap wood is converted into heart wood, its growth being marked by the annular rings, additional growth in the sap wood taking place next to the bark. Sap wood in unseasoned lumber molds or stains very rapidly when stowed in confined spaces. In shipping green or unseasoned lumber in box cars or the holds of vessels, great care must be exercised regarding sap wood. Bright sap in seasoned lumber is not to be considered a defect.

Material required free from sap will be so specified in the contract. Where seasoned lumber is not specified, unseasoned lumber may be accepted. Should seasoned or dry lumber be called for, unseasoned or green lumber must not be accepted.

Grading.—Material known as "yard lumber," such as "dimension," "common boards," "finish," etc., is graded from the face side, which is the better side, and the upper half of two edges. The opposite side, however, must be within one grade of the face side. Material surfaced one side shall be graded from that side.

Factory lumber, which is used for the manufacture of doors, sash, etc., and must show on both sides, is always graded from the poorer side. The grade of this class of material is determined by the quantity of suitable cuttings obtainable in each piece.

A standard board for the purpose of "equivalent" is 1 inch thick, 12 inches wide, and 12 to 16 feet in length.

The defects in lumber are to be considered in connection with the size of the piece, and for this reason wider and longer pieces will carry more defects than smaller pieces in the same grade.

Equivalents in the application of grading rules, means that the defects allowed, whether specified or not, are understood to be equivalent in damaging effect to those specifically mentioned.

Pieces of lumber that would take two or three standard defects may have a large defect equal in damage to the two or three standard defects.

NOTE.—The symbol "S1S" means surfaced or dressed one side, "S2S," dressed two sides.

WHITE PINE.

Grades.—White pine will be divided into the following grades and shall conform to the requirements specified:

No. 1 white pine, known as uppers.
No. 2 white pine, known as selects.
No. 3 white pine, known as No. 1 dressing or shelving.
No. 4 white pine, known as No. 1 barn boards.
No. 5 white pine, known as No. 1 common.

To be of the best quality white pine. (Idaho, Mexican and California white pine will not be considered under these specifications.) Norway pine will be admitted under No. 5 white pine.

Bidders must state specifically the district or locality from which the material proposed has been or will be cut.

Measurement.—Fractions of a foot will be counted as follows: Even half feet to be alternately counted and allowed as a whole foot. Fractions under a half foot to be dropped; fractions above a half foot to be allow as a whole foot.

Defects Allowed.—For thicknesses up to and including 2 inches the following defects will be allowed as indicated. For greater thicknesses a proportional increase of defects will be allowed.

No. 1 White Pine, Known as Uppers.

Grades.—This material will be divided into two grades, known as "firsts" and "seconds." When delivery is made of a combination of these grades, same shall consist of 50 per cent of firsts and 50 per cent of seconds, and shall not contain more than 10 per cent of seconds in 8-inch widths.

Sizes and Defects.—To be cut to full thickness and to run 8 inches and wider.

Firsts.—At least 50 per cent to be 10 to 12 inches in width and 50 per cent to be 13 inches and over in width. To be 12 to 16 feet in length and average 14 feet in length. To be practically free from all defects.

Seconds.—Width to be 8 inches and wider and to average not less than 12 inches. Length to be 10 to 16 feet and to average 14 feet. This grade may contain any one of the following combinations of defects:

Width 8 to 9 inches: To be clear on both faces.
Width 10 to 11 inches:

(a) One half inch bright sap on each edge.
(b) One inch bright sap on one edge.
(c) Two sound knots not over $\frac{1}{2}$ inch in diameter.

Width 12 to 14 inches:

(d) One inch bright sap on each edge.
(e) Two inches bright sap on one edge.
(f) Two sound knots not over 1 inch in diameter.
(g) Four sound knots not over $\frac{1}{2}$ inch in diameter, well scattered.

Width 15 inches and over: A proportional increase in the number of defects will be allowed.

Quality.—To be free from wane, stained sap, wormholes, gum spots, shakes, heart pitch, cross grain, warping, twisting and branch or unsound knots, except as allowed above.

No. 2 White Pine, Known as Selects.

Sizes and Defects.—To be cut to full thickness and to run 8 inches and up, averaging 12 inches. To be 10 to 16 feet in length and average not less than 14 feet. This grade may contain any one of the following combinations of defects:

Width 8 to 9 inches:

(h) One inch bright sap on one edge.
(i) Two sound knots not over $\frac{1}{2}$ inch in diameter.

Width 10 to 11 inches:

(j) One inch bright sap on each edge.
(k) Two inches bright sap on one edge.
(l) Three sound knots, not over $\frac{1}{2}$ inch in diameter, well scattered.
(m) Two sound knots, not over 1 inch in diameter, well scattered.

Width 12 to 14 inches:

(n) One and one-half inches bright sap on each edge.
(o) Three inches bright sap on one edge.

(p) Four sound knots, not over ½ inch in diameter, well scattered.

(q) Three sound knots, not over 1 inch in diameter, well scattered.

(r) One straight split not over 8 inches in length.

(s) A very slight local shake.

(t) Two wormholes near end of edge.

Quality.—To be free from wane, stained sap, wormholes, gum spots, shakes, heart pitch, cross grain, warping, twisting and branch or unsound knots, except as allowed above.

No. 3 White Pine, Known as No. 1 Dressing and Shelving.

Sizes.—To be cut to full thickness and to run 10 inches and wider, and to average 14 inches in width; not more than 25 per cent of 10-inch widths allowed. To be 10 to 16 feet in length and to average 14 feet.

Quality.—To be free from wane, shake, rot, heart pitch, twisting, warping, stain, dark sap and uneven sawing. Bright sap and knots on one edge only will be allowed. This grade may contain sound knots not over 1½ inches in diameter, but no large branch or unsound knots will be allowed.

No. 4 White Pine, Known as No. 1 Barn Boards.

Sizes.—To be cut to full thickness and to run 12 inches and wider, and to average 13 inches in width. To be 10 to 16 feet in length and to average 14 feet.

Quality.—To be smooth, sound lumber. To be free from wane and course, loose or rotten knots or knots larger than 2 inches; to be practically free from shake.

No. 5 White Pine, Known as No. 1 Common.

Sizes.—To be cut to full thickness and to run 8 inches and wider, and to average not less than 10 inches in width. To be 10 to 16 feet in length and to average not less than 14 feet.

Quality.—This grade admits of sound, tight-knotted stock with a small amount of shake and sap stain if they do not affect the general utility of the pieces. This grade shall be suitable for ordinary work.

TONAWANDA INSPECTION RULES FOR WHITE PINE.

(Navy Department Specifications.)

Grades.—White pine will be divided into the following grades and shall conform to the requirements specified:

(a) Uppers.
(b) Selects.
(c) Fine common.
(d) Shelving.
(e) Barn boards No. 1.
(f) Barn boards No. 2.
(g) Barn boards No. 3.
(h) Box boards.
(i) Molding No. 1.
(j) Molding No. 2.
(k) Stained saps.

General.—All lumber to be properly manufactured. These specifications shall be construed to define the poorest piece of a specified grade, and the respective grades shall contain pieces up to the next highest grade. Inspection will be made from the poor side of the piece. One-inch lumber shall be delivered of a sufficient thickness to dress, when seasoned, to two sides at least $\frac{13}{16}$ inch in thickness. All sizes above 1 inch shall be delivered full thickness when seasoned.

Measurement.—Even half feet will be alternately counted and dropped. Fractions under a half foot will be dropped; fractions over a half foot will be counted as a whole foot.

Standard Defects.—For thickness up to and including 2 inches the following standard defects will be allowed as indi-

cated. For greater thicknesses a proportional increase of sap and knot defects will be allowed:

Standard knot: A sound knot not over 1¼ inches in diameter.

Standard split: A straight split not longer than the width of the board.

Standard amount of sap: Sap not over 1½ inches in width.

Uppers.

Sizes.—To be 8 inches and wider, averaging at least 12 inches in width. To be 10 to 16 feet in length, with at least 65 per cent of delivery 16 feet in length.

Defects Allowed.—This grade may contain any one of the following combinations of standard defects:

Widths 8 to 9 inches: 1 inch of bright sap.

Widths 10 to 11 inches:

(a) One inch of bright sap and one standard knot.
(b) Three inches of bright sap.
(c) Two and one-half inches bright sap and one standard split.
(d) One standard knot and one standard split.

Widths 12 to 13 inches:

(a) Two standard knots.
(b) One standard knot and 3 inches bright sap.
(c) Five inches bright sap.
(d) Three and one-half inches bright sap and one standard split.

Widths 13 inches and over: One standard defect for every additional 2 inches in width, but only one standard split will be allowed in any one board.

To be free from loose or unsound knots, wormholes, shake, split and sap stain.

Selects.

Sizes.—To be 8 inches and wider and average at least 11 inches in width. To be 10 to 16 feet in length, with at least 60 per cent of delivery 16 feet in length.

Defects Allowed.—This grade may contain any one of the following combinations of standard defects:

Widths 8 to 9 inches:

(a) One inch bright sap and one standard knot.

(b) One inch bright sap and one standard split.

Widths 10 to 11 inches:

(a) One inch bright sap and two standard knots.

(b) Four and one-half inches bright sap.

(c) Two and one-half inches bright sap, one standard knot, and one standard split.

(d) Two standard knots and one standard split.

Widths 12 to 13 inches:

(a) Three standard knots.

(b) Two standard knots and 3 inches bright sap.

(c) Six inches bright sap.

(d) Four and one-half inches bright sap and one standard split.

Widths 13 inches and over: One standard defect for every additional 2 inches in width, but only one standard split will be allowed in any one board.

To be free from wormholes, shake, sap stain, loose or unsound knots.

Fine Common.

Sizes.—To be 8 inches and wider and average at least 10 inches in width. To be 10 to 16 feet in length, with at least 60 per cent of delivery 16 feet in length.

Defects Allowed.—This grade may contain any one of the following combinations of standard defects:

Widths 8 to 9 inches:

(a) Two standard knots and 1 inch bright sap.

(b) One standard knot, one standard split and 1 inch bright sap.

Widths 10 to 11 inches: Three standard knots and 1 inch bright sap.

Widths 12 to 13 inches:

(a) Four standard knots and 1 inch bright sap.

(b) Three standard knots and 3½ inches bright sap.

(c) One standard knot and 6 inches bright sap.

(d) One standard split and four standard knots and 1 inch bright sap.

Widths 13 inches and over: One standard defect for every additional 2 inches in width, but only one standard split will be allowed in any one board.

A little shake and a small amount of sap stain will be accepted on one side of board if enough of the other defects is absent. To be free from wormholes, rot and loose or unsound knots.

Shelving.

Sizes.—To be 10 inches and wider and average at least 11 inches in width. To be 10 to 16 feet in length, with at least 65 per cent of delivery 16 feet in length.

Defects Allowed.—This grade may contain 8 to 10 knots ½ inch to 1 inch in diameter and shall have two practically clear edges. It may contain a small amount of tight heart and a small amount of bright sap or a standard split if the knots are few. To be free from wormholes, rot, stain or unsound knots.

Barn Boards No. 1.

Sizes.—To be 8 inches and wider, and average at least 10 inches. To be 10 to 16 feet in length, with at least 65 per cent of delivery 16 feet in length.

Defects Allowed.—Pieces 8 to 11 inches in width may contain two branch knots not over 1½ inches long, showing on one side only, and 8 knots ½ inch to 1 inch in diameter. Pieces 12 inches and wider may contain knots of larger size in proportion to the width of the board, but no knot shall be larger than 2 inches. This grade may contain a small amount of bright sap and tight heart and a standard split. To be free from wormholes and rot, shake and loose or unsound knots.

Barn Boards No. 2.

Sizes.—To be 6 inches and wider and average at least 10 inches. To be 6 to 16 feet in length, with at least 60 per cent of delivery 16 feet in length and not more than 10 per cent of 6-foot lengths.

Defects Allowed.—Pieces 6 to 9 inches in width may contain four branch knots not over 1½ inches long, on one side only, and not over 10 knots 1 inch in diameter or 15 small scattered knots. Pieces 9 inches and wider may contain proportionally larger size and amounts of knots. To be free from wormholes, rot and loose or unsound knots, and may contain a small amount of shake and sap stain.

Barn Boards No. 3.

Sizes.—To be 3 inches and wider and average at least 6 inches. To be 6 to 16 feet in length, with at least 60 per cent of delivery 16 feet in length and not more than 10 per cent of 6-foot lengths.

Defects Allowed.—This grade may contain any number of knots which do not affect the strength of the board and some shake and sap stain. Knots over 2 inches in diameter, knot holes or rot will not be admitted.

Box Boards.

Sizes.—To be 3 inches and wider and not less than 6 feet in length.

Defects Allowed.—This grade may contain large knots, some shake, sap stain and splits, but must be capable of being cut up into good sound boxing lumber with not over 10 per cent of waste.

Molding No. 1.

Sizes.—To be 3 inches and wider and average at least 5 inches. To be 10 to 16 feet in length with at least 60 per cent 16 feet in length.

Defects Allowed.—This grade shall have one clear face and may contain bright sap on entire back. Pieces which are clear of knots may contain one-third bright sap. Pieces free from sap may contain one standard knot. Pieces 5 inches and under, in absence of sap, may contain one knot not over $\frac{3}{4}$ inch in diameter or two or three pencil knots well scattered.

Molding No. 2.

Sizes.—To be 3 inches and wider, and average at least 5 inches. To be 10 to 16 feet in length, with at least 60 per cent 16 feet in length.

Defects Allowed.—This grade may contain one-half bright sap and two small sound knots, or, in lieu of knots, may contain all bright sap or one-third sap on face and 25 per cent sound stain sap on back. Pieces that are 50 to 60 per cent clear of sap and contain no knots may contain a little shake on one side.

Stained Saps.

Sizes.—To be 3 inches and wider, and average at least 7 inches. To be 10 to 16 feet in length, with at least 60 per cent 16 feet in length.

Defects Allowed.—Sound stained sap is no defect, but lumber must grade to No. 1 molding and better for other defects.

PINE, WHITE, WESTERN (IDAHO).

Grades.—The following grades shall be furnished, as specified:

No. 1 Western (Idaho) white pine, known as finishing lumber, B select and better.

No. 2 Western (Idaho) white pine, known as C select.

General.—All lumber to be properly manufactured, and to be full thickness when shipped dry. Inspection to be made from the poor side of the piece. Defects in lumber should be distributed in proportion to the size of the piece. Long or

wide pieces may contain more and greater defects than shorter or narrower pieces. The same percentage of defects should be observed in both long and short and wide and narrow pieces. These specifications shall be construed to define the poorest piece of a specified grade which shall contain pieces up to the next highest grade.

The defects, as shown below, are those which may appear in a piece 16 feet long, and the number of defects allowed will be in proportion to the length.

(a) Wane in lumber is a defect which cannot be definitely described and, therefore, must be left to the judgment of the inspector.

(b) The lowering of grade on the face side on account of wane will be governed by grade widths and defects in the piece.

(c) Bright sap shall not be considered a defect.

(d) To be free from blue sap and stain, loose or unsound knots, wormholes, shake, split, pitch and other defects, except as noted in the specified grades.

(e) The defects enumerated apply to thicknesses up to and including 2 inches. For greater thickness a proportional increase of knot defects will be allowed.

Sizes.—To be 8 inches and wider, averaging at least 13 inches. To be 8 to 16 feet in length, with not more than 5 per cent of 8-foot lengths, and to average not less than 14 feet.

NO. 1. WESTERN (IDAHO) WHITE PINE.

Defects Allowed.—This grade may contain any one of the following combinations of defects:

Widths 8 Inches and Under 10 Inches.—To be clear on face; may show one small sound knot near end, and may have blue stain 2 inches wide on edge running out at 4 feet. In the absence of the above defects, may contain their equivalent.

Widths 10 Inches and Under 12 Inches.—To be clear on face; may show 1 inch of blue stain for one-third the length of

the piece, one small sound knot at each end and one $\frac{5}{8}$-inch sound knot near center of the board. In the absence of the above defects, may contain their equivalent.

Widths 12 Inches and Under 14 Inches.—May contain one small knot near each end and $2\frac{1}{2}$ inches of medium blue stain for 4 feet on one edge. The reverse side may have 3 inches of blue stain on both edges for 5 feet at one end. In the absence of the above defects, may contain their equivalent.

Widths 14 Inches and Under 16 Inches.—May contain two $\frac{1}{2}$-inch tight black knots near the center and a small pitch pocket which does not show through the piece. The reverse side may have $\frac{3}{4}$ inch of wane for 3 feet and show same knots as on face. In the absence of the above defects, may contain their equivalent.

As the widths increase a proportional increase of defects will be allowed.

NO. 2 WESTERN (IDAHO) WHITE PINE.

Defects Allowed.—This grade may contain any one of the following combinations of defects:

Widths 8 Inches and Under 10 Inches.—May contain 3 inches of blue stain for 2 feet, and three small knots. The reverse side may show blue stain in four places. In the absence of the above defects, may contain their equivalent.

Widths 10 Inches and Under 12 Inches.—May contain 5 very small knots well scattered, a season check near one edge, and 1 inch of blue stain for 2 feet on the end of the other edge. In the absence of the above defects, may contain their equivalent.

Widths 12 Inches and Under 14 Inches.—May contain 2 inches of blue stain on each edge, two 1-inch tight knots and two $\frac{1}{2}$-inch knots. Reverse side may show slight stain clear across one-quarter of the piece. In the absence of the above defects, may contain their equivalent.

Widths 14 Inches and Under 16 Inches.—May contain one $\frac{3}{4}$-inch poor knot and three $\frac{1}{2}$-inch black knots, also 4 feet of slight traces of pitch at one end. Reverse side may show same knot and pitch defects and a small season check. In the absence of the above defects, may contain their equivalent.

As the widths increase a proportional increase of defects will be allowed.

NOTE.—Western yellow pine, sometimes known as soft western white pine, is *not* acceptable under these specifications. White pine, from the Idaho region, is required.

NEW ENGLAND COUNTRY WHITE PINE.

Grades.—New England country white pine shall be graded as follows:

(a) Planers.
(b) Smooth shippers.
(c) Shippers.
(d) Bangor fours.
(e) Pattern-making material.
(f) Boatbuilding material.

Quality.—All lumber shall be properly manufactured and sawn square edge unless otherwise specified. These specifications shall be construed to define the poorest piece of a specified grade which shall contain pieces up to the next highest grade. All lumber shall be air-dried on sticks for at least one month before shipment. Lumber shall be of sufficient thickness so that when thoroughly seasoned the thickness after planing on both sides will not be over $\frac{3}{16}$ inch below that called for.

Standard Defects.—For thicknesses up to and including 2 inches the following standard defects will be allowed as indicated. For greater thicknesses a proportional increase of defects will be allowed:

Standard Knot.—A sound red knot not over $1\frac{1}{4}$ inches in diameter.

Standard Split.—A straight split not longer than the width of the board.

Standard Amount of Bright Sap.—Bright sap not over one-fourth the width of the board.

Thin ends will be treated as splits.

Stained sap will not be accepted in grades except as specified.

Measurements.—Even half feet will be alternately counted and dropped. Fractions under a half foot will be dropped; fractions over a half foot will be counted as a whole foot. Tapering lumber will be measured at one-third from the narrow end. Flitch-sawn lumber will be measured on the narrow face under the bark at the middle of the board.

Planers.

Sizes.—Widths shall be 6 inches and over and shall average not less than 9 inches. Lengths shall be 8 to 16 feet or over and shall average not less than 12 feet.

Defects Allowed.—Widths 6 to 7 inches in this grade shall be absolutely clear on one face, but 5 to 8 per cent of smooth, hard shake, and one standard defect or its equivalent will be allowed on the other face. In widths 8 to 9 inches, two standard knots will be allowed. In widths over 9 inches, a proportional increase of standard defects will be allowed. Planers shall be free from wormholes; stained sap; large or unsound, loose or unsound, or hollow knots; branch knots; rot; shelly heart, and other defects except as noted.

Smooth Shippers.

Sizes.—Widths shall be 6 inches and over and to average not less than 9 inches. Lengths shall be 8 to 16 feet or over and shall average not less than 12 feet.

Defects Allowed.—This grade may contain any one of the above combinations of standard defects, or its equivalent, to every 8 surface feet.

Shippers.

Sizes.—Widths shall be 5 inches and over and shall average not less than 8 inches. Lengths shall be 6 feet and over and shall average not less than 8 feet.

Defects Allowed.—To every 8 square feet of surface, four branch knots not over 1¼ inches in length on one side only, or their equivalent; or five standard knots, or their equivalent, will be allowed. Shippers shall be free from large or unsound, loose or hollow knots; wormholes; rot; shelly heart or other defects except as noted above, and shall not contain over 10 per cent of shake or stained sap.

Bangor Fours.

Sizes.—Widths shall be 3 inches and over and shall average not less than 6 inches. Lengths shall be 6 feet and over and shall average not less than 9 feet.

Defects Allowed.—This grade may contain any number of sound knots which do not affect the strength of the board. Some shake, stained sap, splits or thin ends not exceeding one-fourth the length of the board will be accepted.

Pattern-Making Material.

Planers and smooth shippers for pattern-making and similar purposes, where short lengths only are necessary, shall in addition to the requirements of the grade conform to the following: To be country pine butts in lengths of 6 feet and over and to average not less than 8 feet. To be 6 inches and over in width and to average not less than 10 inches. To be clear of knots (except as allowed in the grade), shakes, splits, wormholes and other injurious defects.

Boatbuilding Material.

Smooth shippers for boatbuilding to be square edge or flitch sawn, as specified, and shall conform to the requirements of the grade, with the exception of the following:

Material 1 inch thick, which shall be 14 to 22 feet in length, averaging not less than 18 feet, and 10 to 16 inches in width, averaging not less than 12 inches.

Material 1¼ and 1½ inches thick, which shall be 18 to 24 feet in length, averaging not less than 20 feet, and 12 inches and over in width, averaging not less than 14 inches.

Material to be soft-grained and suitable for boatbuilding.

PINE, YELLOW: DECKING; LUMBER; TIMBER; STICKS FOR MASTS AND SPARS.

Yellow Pine Decking.—(a) To be of the best quality fine grained, longleaf yellow pine (*Pinus Palustris*), that has not been tapped, from the Gulf ports; to be in lengths 16 feet and up, averaging at least 24 feet; to be well manufactured and sawed fair and full to the sizes given. Seasoning to be as specified on the order, under the terms defined in paragraphs below. To be all heart and edge grain, free from splits, shakes, heart centers, corner knots, rot, red heart, pitch streaks and pitch pockets.

(b) In square decking one face, and in other decking one wide face, must be absolutely clear and must show edge grain its entire length.

(c) The underside of piece may have perfectly sound, tight knots.

(d) The lower half of edges may have perfectly sound, tight knots, not greater in diameter than one-fourth the width of face on which they appear, but no knot must show on the corners of the clear face after working (to keep calking edge clear).

(e) Edge grain admits no piece in which the angle of the grain exceeds 45° from vertical at any point.

Margin Pieces.—To conform in quality to the foregoing specifications for yellow pine decking, above paragraphs (a), (b), (c), (d) and (e), except the requirements as to edge grain which are modified as follows:

(a) Up to 6½ inches in width to show all edge grain.

(b) Seven to 9½ inches in width, inclusive, to show 6 inches edge grain, all on one side.

(c) Ten inches and over in width, no requirement as to edge grain, and bright sap allowed on lower face and sides, not to exceed a total of one-eighth of the width or one-fourth of the thickness of the piece.

Yellow Pine Hewn Timber.—(a) To be in lengths from 25 to 70 feet and to average at least 40 feet. No stick to contain less than 600 feet board measure; at least 50 per cent of the total to average 1500 feet board measure, and the remainder at least 1000 feet board measure.

(b) To be best quality fine-grained, longleaf yellow pine (*Pinus Palustris*) from the Gulf ports. To be sound and free from rot, red heart, twisted growth, and cat face. To be free from unsound, rotten or injurious knots. No sound knot to exceed 3 inches in diameter, and the number of knots in each stick not to exceed one to every 7 feet of length. To be free from injurious rotten shakes, wind shakes or resin shakes. To be practically straight. Taper to be uniform and not to exceed 1 inch in 15 running feet. Must be well manufactured; hewn on four sides, a few slight ax marks being allowed. May show 1½ inches wane on all four corners or not exceeding 3 inches of wane on only one corner of any stick nor for more than one-half the length of same. Not over 25 per cent of the number of pieces to show score hacks, subject to an allowance of 1 inch measured off, each side showing same, and no score hacks allowed deeper than ½ inch on any face. To show heartwood at least one-third the length on two faces and one-fifth the length on other two sides.

(c) Measurement to be as follows: The length to be taken inside the pinholes, and the breadth and depth to be taken at the middle of the stick, which, with the length, shall be considered size for computation. Trimming must be done if

found necessary. Each log to be plainly numbered on both ends, corresponding number to be given on invoice, followed by size of log.

Yellow Pine Hewn Sticks for Masts and Spars.—(a) Lengths to be from 65 to 85 feet and up, averaging 70 feet. To be from 17 to 24 inches in diameter at middle of length and to average at least 2200 feet board measure to the stick. To be best quality fine-grained, longleaf yellow pine from the Gulf ports. To be sound and free from rot, red heart, twisted growth and cat face.

(b) To be straight; no sweep allowed. Taper to be uniform and not to exceed 1 inch in 15 running feet. May show 3 inches wane on each corner, or such an amount as will, in the judgment of the inspector, not injure the sticks for the purpose intended. Must be fairly manufactured; hewn on four sides; a few slight ax marks will be allowed. Not over 25 per cent to show score hacks, subject to an allowance of 1 inch measured off, each side showing same, and no score hack allowed deeper than $\frac{1}{2}$ inch.

(c) To show heart at least one-third of the length on each of the four sides.

(d) To be free from unsound, rotten or injurious knots. No sound knots to exceed 3 inches in diameter, and the number of knots in each piece not to exceed one to every 7 feet in length. To be free from wind shakes, resin shakes or any other injurious shake.

(e) Measurement to be as follows: The length to be taken inside of pinholes. The breadth and depth at the middle of the length shall, with the length, be considered the size for computation. Trimming must be done, if found necessary.

SPRUCE POLES AND STICKS FOR SPARS AND SHORES.

General Instructions.—General Specifications for Inspection of Material, issued by the Navy Department, in effect at date of opening of bids, shall form part of these specifications.

Quality.—Spruce poles and sticks for spars and shores to be of best quality, straight and fresh cut, with the bark on, unless otherwise specified; to be free from large or unsound knots, ring knots, split tops or butts, shakes, twisted growths or other defects.

Poles.—Poles (namely, 5 inches diameter and under) to have very few knots, which should generally be no larger than $\frac{3}{8}$ inch. The specified diameter to be measured at a distance of one-third of the length from the butt; the diameter of the top end to be two-thirds of the specified diameter of the pole; measurements to be taken under the bark.

Sticks.—Spruce sticks to be of good quality, straight and fresh cut, with the bark on, unless otherwise specified; to be free from unsound knots and other defects that make the sticks unsuitable for shores. The specified diameter to be measured at a distance of one-third of the length from the butt; the diameter of the top end to be two-thirds of the specified diameter of the stick; measurements to be taken under the bark.

SPRUCE.

Grades.—Spruce will be divided into the following grades and shall conform to the requirements specified:

I. Southern spruce.

Spruce Manufacturers' Association rules for grading. (Adopted by the New York Lumber Trade Association April 13, 1910.)

(a) Firsts and seconds.
(b) Selects.
(c) Dressing.
(d) Merchantable.
(e) Box.

II. New England or Canadian spruce.

(a) Clear.
(b) Merchantable.
(c) Box.

General.—(a) Spruce lumber shall be purchased as southern or as New England spruce, in accordance with the specifications given separately below for each kind. This classification is not intended to represent a difference in quality of the two kinds of spruce, but is made solely for the reason that in New England and Canada spruce is graded and sold under different rules from those of the Spruce Manufacturers' Association adopted by the New York Lumber Trade Association April 13, 1910, which apply to spruce grown or purchased in the South, in the Middle Atlantic States, and in the Middle West. It is desired as far as practicable to purchase spruce in accordance with the rules of the section of the country in which grown, and to allow bidders all possible latitude, irrespective of the section, in which the spruce is grown. West coast spruce and Douglas fir, being different qualities of wood, are not included in these specifications.

(b) All lumber to be sawn square edge, unless otherwise specified. To be sawn fair and full to sizes given, and lumber but partly seasoned will be accepted unless otherwise specified. Defects in all cases to be considered in connection with the size and general quality of the piece. Ordinary shrinkage due to seasoning will be allowed in seasoned lumber. In fully seasoned lumber Table 16 of green and finished sizes are given, and no lumber which, in inspector's opinion, will not finish to given dimensions will be accepted.

Table 16.

Green.		Finished (planed four sides).	
Thickness.	Widths.	Thickness.	Widths.
In.	*In.*	*In.*	*In.*
1 to 1½	4 to 7, 8 to 12	$\frac{13}{16}$ to $1\frac{5}{16}$	$\left\{\begin{matrix}3\frac{3}{4}\text{ to }6\frac{3}{4}\\7\frac{3}{4}\text{ to }11\frac{3}{4}\end{matrix}\right.$
1¾ to 2½	4 to 7, 8 to 12	1½ to 2¼	$\left\{\begin{matrix}3\frac{3}{4}\text{ to }6\frac{3}{4}\\7\frac{3}{4}\text{ to }11\frac{3}{4}\end{matrix}\right.$
2¾ to 3	4 to 7, 8 to 12	$2\frac{7}{16}$ to $2\frac{9}{16}$	$\left\{\begin{matrix}3\frac{3}{4}\text{ to }6\frac{3}{4}\\7\frac{3}{4}\text{ to }11\frac{3}{4}\end{matrix}\right.$

Measurement.—Fractions of a foot will be treated as follows: Even half feet will be alternately counted out and allowed as a whole foot. Fractions under a half foot will be dropped; fractions above a half foot will be allowed as a whole foot. Tapering lumber will be measured at one-third from the narrow end. Flitch sawn lumber will be measured on the narrow face under the bark at the middle of the length.

Comparison.—The following is an approximate comparison of the grades under each kind:

Southern firsts and seconds correspond to New England clears.

Southern selects, dressing and merchantable correspond to New England merchantable.

Southern box corresponds to New England box.

Southern Spruce.

Spruce Manufacturers' Association Rules for Grading.

(Adopted by the New York Lumber Trade Association April 13, 1910.)

Firsts and Seconds.—Thickness, 1, 1¼, 1½, 2 and 3 inches. Widths, 4, 6, 8, 10 and 12 inches. Lengths, 10 feet and up.

Shall contain all the best of the log and shall be practically clear on face and both edges. Two or three pencil knots, proportional to width of piece, or wane equal in width to half thickness and not over one-fourth of the length of the piece admitted on face side of 15 per cent of pieces. Bright sap is no defect. Small knots admitted on reverse side. Season checks or splits equal in length to half width of piece admitted.

Selects.—Thickness, 1, 1¼, 1½, 2 and 3 inches. Widths, 4, 6, 8, 10 and 12 inches. Lengths, 10 feet and up.

May contain any number of small, tight knots varying in size from lead pencil to silver quarter, according to width of piece; quality rather than quantity of knots governs, but edges must be free of knots. Bright sap no defect and very slight sap

stain admissible. Wane or bark on one side equal in amount to half the thickness and one-third of the length of the piece admitted on not over 15 per cent of pieces. Season checks or splits equal in length to two-thirds the width of the piece admitted.

Dressing.—Thickness, 1, 1¼, 1½, 2 and 3 inches. Widths, 4, 6, 8, 10 and 12 inches. Lengths, 10 feet and up. Small, tight knots and large, sound knots admitted without limit as to number, but character must be such that they must not pull or tear out in planing. Large mule-ear or horn knots not admitted. Slight sap stain, but no black sap admitted. Wane or bark on one side equal in amount to half the thickness and one-half the length of the piece admitted on not over 15 per cent of pieces. Season checks or splits equal in length to width of the piece admitted. Must have good, smooth edges and in general be of such character that it will show smooth when planed.

Merchantable. (a) *Boards.*—Thickness, 1, 1¼ and 1½ inches. Widths, 4, 6, 8, 10 and 12 inches. Lengths, 8 feet and up. Knots of every size admitted, but no rotten knots or knot holes.

Slight heart check or shake admitted on one side only. Small amount of black or discolored sap admitted. Wane or bark on one side equal to half the thickness and one-half the length of the piece admitted. Season checks or splits equal in length to width of piece admitted. No rot or other defect which will impair the general soundness of the piece is allowed.

(b) *Dimensions.*—Thickness, 2 inches and over. Any width and any length.

Will admit of no defect which materially impairs its strength. Straight check and heart shake admitted, but no rotten knots or rotten wood.

Box.—Thickness, 1, 1¼, 1½ and 2 inches. Widths, 4 inches and up. Lengths, 6 feet and up. Not over 5 per cent 6 feet.

Large black knots, knots not sound in character, knot holes, heart checks or shakes, black sap, and small amount of hard redwood admitted. Wane or bark equal to half the thickness and one-quarter of the length on the face, or equal to 20 per cent of the piece on the back, admitted. Season checks or splits equal to one-third the length of the piece admitted. Pin worms and scattering grub holes admitted. This grade is designed for boxes and crating, and some waste or bad material is allowed.

Sizes of Dressed Stock.—One-inch, D1S or D2S $\frac{3}{16}$ inch, scant in thickness; $1\frac{1}{4}$-inch and $1\frac{1}{2}$-inch select and clear, D1S or D2S $\frac{1}{8}$ inch, scant in thickness; 2-inch and 3-inch, D1S or D2S $\frac{1}{4}$ inch, scant in thickness; 1, $1\frac{1}{4}$, $1\frac{1}{2}$, 2 and 3-inch by 3 inches to 8 inches wide, D1E or D2E $\frac{3}{8}$ inch, scant in width; 1, $1\frac{1}{4}$ and $1\frac{1}{2}$-inch by 9-inch to 12-inch width, D1E or D2E $\frac{1}{2}$ inch, scant in width. Matched or T. & G. stock $\frac{3}{4}$-inch scant face width.

New England Spruce.

Clears. (a) *Sizes.*—Random lengths, 8 feet and up. Widths to be 4 inches and up, as specified. Thicknesses to be as specified.

(b) *Defects Allowed.*—This grade to be clear on face and two edges; the reverse side may contain sound red pencil knots not over $\frac{5}{8}$ inch in diameter. To be free from wane, shake, red rot, wormholes, stained sap and all other injurious defects.

Merchantable. (a) *Sizes.*—Random lengths, 8 feet and up. To be 4 inches and up in width, as specified. Thickness as specified.

(b) *Defects Allowed.*—This grade combines firsts, seconds, thirds and fourths, and must contain at least 60 per cent firsts and seconds, and 20 per cent thirds, and conform to the following specifications:

(c) *Firsts.*—To be straight-grained spruce, free from shake, red rot, shelly heart, branch knots, black knots, unsound knots, wormholes and stained sap. It may contain small sound red knots up to $\frac{3}{4}$ inch in diameter. End splits not exceeding in length the width of piece. Wane not over half the thickness of piece and not exceeding in length the width of piece will be allowed at end on not over 15 per cent of pieces.

(d) *Seconds.*—To conform to the requirements for firsts except that knots up to $1\frac{1}{4}$ inches diameter may be allowed; a slight amount of hard shake on one side only. A few branch knots not exceeding 1 inch in diameter and $2\frac{1}{4}$ inches long.

(e) *Thirds.*—May contain large sound knots of any dimensions, wane or bark not exceeding one-half the thickness and extending not over one-half the length of piece in 50 per cent of pieces. A small amount of stained sap and shake may be allowed.

(f) *Fourths.*—To conform to requirements of thirds except that small black spike knots not over $\frac{3}{4}$ inch in diameter may be allowed, and a slight increase in amount of stained sap and shake. Knot holes, rotten knots, twisted or warped stock, or any defect that will impair the general utility of piece not allowed. Straight splits not over one-half of length of the piece will be allowed.

Box. (a) *Sizes.*—Lengths to be random, 6 feet and up. Widths to be 4 inches and up, as specified. Thicknesses as specified.

(b) *Defects Allowed.* —This grade will admit the following: Large branch and black knots, knot holes, wormholes, stained sap and a reasonable amount of hard, red rot. Wane not exceeding one-half the thickness of piece and extending full length on one edge only or a proportional amount on two edges. Shakes, splits or checks equal to one-third length of piece.

DOUGLAS FIR.

(Commonly known as Puget Sound or Oregon Pine.)

NOTE.—These specifications are in conformity with the Pacific Lumber Inspection Bureau's Rules for Grading, Domestic List 6 (with the exception of "stage planking," which is graded according to Export List G).

Recognized Defects. (a) *Knots.*—A pin knot is sound and not over ½ inch in diameter.

A small knot is sound and not over 1 inch in diameter.

A standard knot is sound and not over 1½ inches in diameter.

A large knot is sound and any size over 1½ inches in diameter.

(b) *Pitch.*—Pitch seams or pitch shakes are well-defined openings between the grain of wood, containing more or less pitch, either granulated or liquid. A pitch pocket is a well-defined accumulation of pitch at any place in a piece.

(c) *Sap.*—Colored, blue or black. Bright sap, not considered a defect except as specified below.

Definitions. (a) *Grain.*—Edge grain is either vertical or within 45° from vertical. Flat grain is nearly parallel with surface; or other than edge grain.

(b) *Seasoning.*—Green lumber or timber is practically in the same condition as when cut from live timber, no shrinkage having taken place.

Air-dry lumber or timber has reached a moisture content in equilibrium with the average condition of the atmosphere.

Kiln-dry lumber has been dried in a kiln by artificial heat to a moisture content below 10 per cent.

Measurement.—(a) Fractions of a foot of length are measured as of the contents of 1 foot as follows: Even half feet are alternately counted out and allowed; fractions under a half foot are dropped; fractions over a half foot are allowed as a whole foot.

(b) Tapering lumber is measured at one-third distance from the narrow end.

(c) Flitch-sawn lumber is measured on the narrow face, under the bark, at mid-length.

Grades.—Douglas fir will be divided into the following grades, and shall conform to the requirements specified:

No. 2 clear and better.
No. 3 clear.
Selected common.
No. 1 common.
No. 2 common.
No. 1 ship plank.
Deck plank.
Spar timbers.
Stage planking.
Bill stock.

No. 2 Clear and Better.

General.—(a) No. 2 clear and better shall be sound, strong, firm-grained, well-sawn lumber, free from defects other than bright sap on one-face and two-face corners.

(b) *Grain.*—This grade shall be edge grain, flat grain or edge and flat grain stock, as specified. Edge grain clears in widths 10 inches and wider shall show edge grain on face for at least one-half of width.

Defects Allowed.—(a) Based on 1 by 12 inches by 16 feet, bright sap not exceeding one-quarter the width, thickness or length will be allowed; also, one of the following will be allowed: 3 tight pin knots; 1 tight small knot; 3 to 4 small, close pitch pockets that do not extend through the piece, each not more than 2 inches in length, or equivalent combined defects.

(b) In dimensions 2 inches and less in thickness, of contents 24 inches or less to the linear foot, there will be allowed: Narrow pitch pockets not over 4 inches long not extending through the piece, and small knots when appearing on one side only; also, small amount of sap when not exceeding one-quarter the width or length.

(c) In dimensions 3 to 6 inches thick, 6 to 10 inches wide, there will be allowed: Narrow pitch pockets not over 6 inches long not extending through the piece and on one side or edge; light-colored sap not exceeding one-quarter of face or edge or one-half the length; knots not exceeding 1 inch in diameter on one side and lower half of edges.

(d) In dimensions larger than above there will be allowed: Pitch pockets not over 6 inches long; light-colored sap on corners not exceeding 3 inches on face and edge; knots 2 inches and less in diameter, according to size of piece, when on one face and one-half of each corresponding edge, leaving one face and upper half of each edge clear.

No. 3 Clear.

General.—No. 3 clear shall be sound, strong lumber, well manufactured.

Defects Allowed.—(a) Based on $1\frac{1}{2}$ inches or less by 6 inches or less by 16 feet, there will be allowed: 8 small pitch pockets or 4 medium pitch pockets, each not over 6 inches in length; 3 tight, sound 1-inch knots, or equivalent of smaller knots, not appearing on face corners; or equivalent of combined defects.

(b) In other sizes under 6 by 6 inches, small, sound knots and small or medium pitch pockets not over 6 inches in length will be allowed.

(c) In sizes 6 by 6 inches and over, small and standard knots varying according to size of piece, and medium and small pitch pockets, will be allowed.

(d) *Provided*, however, that defects in all cases are to be considered in connection with size of piece and its general quality.

Selected Common.

General.—Selected common is a grade of lumber selected from the grade of No. 1 common, and shall consist of lumber

free from defects that materially impair the strength of the piece, well manufactured, and suitable for high-class constructional and structural or special purposes.

No. 1 Common.

General.—No. 1 common lumber shall consist of lengths 8 feet and over, unless shorter lengths are specified, of a quality suitable for ordinary constructional purposes.

Defects Allowed.—(a) A small amount of wane, large, sound knots, large pitch pockets, colored sap one-third the width and one-half the thickness, slight variation in sawing, and slight streak of solid heart stain will be allowed. Defects to be considered in connection with the size of the piece.

(b) Discoloration through exposure to the elements, or season checks not exceeding in length one-half the width of the piece, will not exclude lumber from this grade.

No. 2 Common.

General.—No. 2 common lumber shall consist of lengths 6 feet and over, unless shorter lengths are specified, suitable for constructional purposes, but having defects excluding it from the grade of No. 1 common.

Defects Allowed.—Large, coarse knots, knot holes and splits that do not render the piece unfit for use, colored sap or wane on one corner, wormholes, large pitch pockets, and solid heart stain on one-half the piece will be allowed.

No. 1 Ship Plank.

General.—No. 1 ship plank shall be firm-grain, well-sawn lumber, free from large knots or other defects impairing its use for the purpose intended.

Defects Allowed.—Considered in connection with size of piece and its quality, the following defects will be allowed: Small, tight, hard knots when not on face corners or calking

seam; bright sap on face-side edges not exceeding one-quarter the width or thickness; small pitch pockets not extending through the piece.

Deck Plank.

General.—Deck plank shall be uniformly sawn, firm grain, free from knots and defects on one face and calking edges, and free from sap when so specified. Flat sizes shall show edge grain on broad face.

Defects Allowed.—Pin and small knots on under side and lower part of calking edges will be allowed, and unless otherwise specified, bright sap, whether green or seasoned, on face-side corner not exceeding one-quarter the width or one-third the length, will be allowed.

Spar Timbers.

General.—Spars shall be cut from strong, sound, straight-grain, slow-growth, live trees; shall be straight, clear, and free from large, cluster, loose or rotten knots, shakes, rotten streaks, deep pitch pockets, buttressed knots, and other visible defects impairing their strength or usefulness.

Manufacture.—(a) Spars shall be delivered rough or dressed, as specified. If rough, with bark on, or peeled, or hewn octagon, as specified; measurements to be taken under the bark.

(b) Minimum diameters at bottom, center and top to be as specified.

Defects Allowed.—Bright sap on corners of dressed spar timbers, that will work out in rounding the piece, will be allowed.

Stage Planking.

General.—Stage planking shall be cut from strong, close-grain, sound, live timber; shall be well sawn, and free from large, cluster, loose or rotten knots, shakes, rotten streaks, large pitch pockets and seams, or other defects tending to

weaken the piece. Spike knots, even when sound, will not be allowed.

Defects Allowed.—The following defects will be allowed: Bright sap on corners not exceeding one-quarter the width or thickness and one-half the length; small, sound knots so spaced as not to weaken the piece; and medium pitch pockets if not extending through the piece.

Bill Stock.

General.—Bill stock shall consist of lumber or timber of sizes and grades for specific construction and not intended for "yard stock," and will be inspected with a view to its adaptability to the use intended.

LOUISIANA CYPRESS FOR JOINER WORK.

Tank Stock.—Thicknesses are 1½, 2, 2½, 3 and 4 inches. Lengths on 1½- and 2-inch thicknesses are 10 to 20 feet; on 2½-, 3- and 4-inch thicknesses, 10 to 16 feet. Not over 10 per cent of 10-foot lengths allowed. This grade is furnished in random widths, shall be 5 inches and wider, and is not furnished in specified widths, and shall be graded from the poorer side.

Pieces up to 7 inches wide shall be free from sap. Pieces 7 to 13 inches wide may have 1 inch of sound sap on one edge not to exceed half the length and half the thickness of the piece. Pieces 14 inches and wider may have 1 inch of sound sap on both edges not to exceed half the length and half the thickness of the piece. In all widths sound knots and slight season checks that do not impair the usefulness for tank purposes are admitted. Tank stock must be well manufactured square edged throughout with ends trimmed square. Otherwise than specified above it must be free from all shakes, wormholes, splits, unsound knots, heart centers and other defects. To be furnished well seasoned.

First and Second Clear.—Thicknesses, 1, 1¼, 1½, 2, 2½, 3 and 4 inches. Lengths, 10 to 20 feet. Not over 10 per cent of 10-foot lengths allowed. Widths shall be 8 inches and wider.

Pieces 8 to 10 inches wide may have 1 inch of bright sap on each edge, or its equivalent on one or both edges; otherwise, they must be clear. Pieces 10 and under 12 inches may have 1½ inches of bright sap on each edge or 3 inches on one edge, and may have one standard knot. Pieces 12 inches wide may have 2 inches of bright sap on each edge, or 4 inches on one edge, and may have one standard knot; or, in lieu of sap, may have two standard knots or their equivalent. Pieces wider than 12 inches may admit of defects as specified above in proportion as width increases. Pieces 10 inches and wider may admit of one end split, which should not exceed in length the width of the piece. Slight season checks allowed in this grade. Pieces 12 inches and less in width, free from other defects, may have bright sap across one face at one end, but this sap shall not exceed in length one-tenth of the length of the piece. In pieces 13 inches and wider, bright sap is not a defect.

First and second clears must be well manufactured square edged throughout with ends trimmed square. Otherwise than specified above they must be free from shakes, wormholes, unsound knots, heart centers and other defects. To be furnished well seasoned.

Selects.—Thicknesses, 1, 1¼, 1½, 2, 2½, 3 and 4 inches. Lengths, 10 to 20 feet. Not more than 10 per cent of 10-foot lengths allowed. Widths, 7 inches and wider.

This grade shall be random widths, and will not be furnished in specified widths, and shall be graded from the better side, but the reverse side shall not be more than one grade lower. Pieces 10 inches and under in width shall admit two standard knots and an additional standard knot for every 2 inches in width over 10 inches. Pieces free from other defects, 10 inches and over in width, to admit pin wormholes on one edge one-

tenth of the width of the piece. Bright sap is not a defect in this grade. Season checks are not a defect in this grade.

Slight wane on pieces 10 inches and over in width is allowed on one edge not over 3 feet in length. When no other defect appears a slight amount of stained sap may be allowed. Pieces 10 inches and wider may admit of one end split which shall not exceed in length the width of the piece. To be furnished well seasoned.

Finishing.—Thicknesses, 1, 1¼, 1½ and 2 inches. Lengths, 10 to 20 feet. Not more than 10 per cent of 10-foot lengths allowed.

Finish shall be graded from the better side, but the reverse side should not be more than one grade lower. All grades of finish may vary ¼ inch in width from the width specified.

"A" Finish.—Widths, specified, 4 inches and up to 24 inches and wider. Pieces 4 and 5 inches wide shall be clear of sap, knots and other defects. Pieces 6 inches wide may have 1 inch of bright sap; or, in lieu of sap, one small, sound knot. Pieces 7 and 8 inches wide may have 2 inches of bright sap; or, in lieu of sap, one small, sound knot. Pieces 9 and 10 inches wide may have 3 inches of bright sap; or, in lieu of sap, two small, sound knots, or 1½ inches of bright sap and one small, sound knot. Pieces 12 inches wide may have 4 inches of bright sap; or, in lieu of sap, one standard knot, or two small, sound knots, or 2 inches of bright sap and one small, sound knot. Pieces 14 inches or wider may have more defects in proportion as the width increases. "A" finish must be well manufactured square edged throughout with ends trimmed square. Otherwise than specified above they must be free from shakes, wormholes, unsound knots, heart centers and other defects. To be furnished well seasoned.

"B" Finish.—Widths, specified, 4 inches and up to 12 inches wide. Pieces 4, 5 and 6 inches wide may have 2 inches of bright sap and one or two small, sound knots; or, in lieu of knots, may have all bright sap. Pieces 7 and 8 inches wide may

have 3 inches of bright sap and two small, sound knots; or, in lieu or knots, may have all bright sap. Pieces 9 and 10 inches wide may have 4 inches of bright sap and one standard knot or three small, sound knots; or, in lieu of knots, may have all bright sap. Pieces 12 inches wide may have 6 inches of bright sap and one standard knot or four small, sound knots; or, in lieu of knots, may have all bright sap. This grade will not be furnished wider than 12 inches. To be furnished well seasoned.

All cypress shall be air-dried and will be considered well seasoned as specified above if within the following weights per thousand feet board measure in the rough:

Two inches and under, 3000 pounds.

Two and one-half and 3 inches, 3500 pounds.

Measurement.—All grades of cypress when received and inspected are to be measured with the standard board rule and when so measured fractions of a foot are to be treated as follows: Even half feet are to be alternately counted out and allowed as a whole. Fractions under a half foot are to be dropped and fractions over a half foot are to be allowed as a whole foot.

Recognized Defects in Cypress.—Recognized defects in cypress are knots, knot holes, shakes, splits, wane, wormholes, stained sap and peck.

Standard Defect.—(a) A standard knot is sound and not to exceed $1\frac{1}{4}$ inches in diameter. (b) Two small knots not to exceed in extent or damage one $1\frac{1}{4}$-inch knot. A small, sound knot is one not exceeding $\frac{3}{4}$ inch in diameter. (c) One straight split not to exceed in length the width of the piece. (d) Worm, grub, knot and rafting pin holes not exceeding in damage one $1\frac{1}{4}$-inch knot. Slight season checks shall not be considered a defect in any grade.

CYPRESS FOR BOAT BUILDING.

Quality.—To be of a selected grade and suitable for boat work. To be free from large, unsound, loose or hollow knots, wormholes, knot holes, heart centers, stained sap, rot, shake,

dote or any other defects which may render the board unsuitable for boat work. Each piece shall show heartwood for at least three-fourths of its surface. Inspection will be made on the poor side of the board.

Standard Defects.—The following defects will be considered as standard:

(a) A sound knot not over $1\frac{1}{4}$ inches in diameter showing on one side only.

(b) A small, sound knot not over $\frac{3}{4}$ inch in diameter showing on two sides.

(c) Two small knots not exceeding in extent or damage one $1\frac{1}{4}$-inch knot.

(d) A straight split not exceeding in length the width of the piece.

(e) Worm, grub, knot or rafting pin holes not exceeding in damage one $1\frac{1}{4}$-inch knot.

(f) Slight wane not over one-fourth the length of piece.

(g) Ordinary season checks will not be considered a defect in any grade.

Defects Allowed.—(a) Boards to be 8 to 16 inches and up in width and to average not less than 12 inches; unless otherwise specified, to be 12 to 20 feet long and to average not less than 16 feet. To be practically square edged.

(b) Boards 8 to 10 inches in width shall be free from all defects.

(c) Boards over 10 inches and under 12 inches in width may have one standard defect or its equivalent.

(d) Boards 12 inches and under 14 inches in width may have two standard defects or their equivalent.

(e) Boards 14 inches and under 16 inches in width may have three standard defects or their equivalent.

(f) Boards 16 inches and over in width may have four standard defects or their equivalent.

Note.—Boards furnished 8 inches and over in width, 12 to 20 feet long, as above, shall be seasoned, *i. e.*, not to exceed 3000 pounds per 1000 feet B. M.

Special Lengths.—Where special lengths are ordered they shall be 12 inches and up in width, averaging not less than 14 inches in width; 20 to 35 feet in length, averaging not less than 24 feet, with at least 10 per cent of maximum length.

Defects Allowed in Special Lengths.—Special lengths may be flitch sawn or square edged or both (one edge squared and one flitch edge). They shall show at least three-fourths heartwood on both sides, and the defects allowed will be based on the number of defects allowed in boards of regular lengths as given above and be in proportion to the lengths of such special length boards.

Measurement.—Even half feet to be alternately counted and dropped. Fractions under a half foot to be dropped, over half foot to be counted as a whole foot. Flitched lumber to be measured in the middle of the length on the narrow face under the bark.

General Instructions.—The lumber shall be properly manufactured of even thickness throughout and shall be thick enough to surface both sides as follows:

$\frac{4}{4}$ lumber to surface 1 or 2 sides $\frac{13}{16}$ inch thick.

$\frac{5}{4}$ lumber to surface 1 or 2 sides $1\frac{1}{8}$ inches thick.

$\frac{6}{4}$ lumber to surface 1 or 2 sides $1\frac{3}{8}$ inches thick.

Notes for Inspectors.—(a) Inspectors are cautioned to use their best judgment, having in mind the purposes for which the lumber is to be used. If by measuring off a defect a board can be accepted under the specifications, the inspector shall use his discretion as to its acceptance. The board, if accepted, shall have the defective portion marked off. In no case shall defects be measured off or cut off for the purpose of raising the grade.

(b) Any material offered or delivered by the contractor under the above specifications showing evidence of the presence or attack of the cypress borer, shall be rejected as a whole.

Notes for Supply Officers.—(a) Cypress other than for boat-building purposes shall be purchased under the Southern

Cypress Manufacturers' Association rules, the required grade to be specifically stated.

(b) Requests and requisitions shall state specifically whether standard or special lengths are required.

WHITE CEDAR.

General.—All lumber shall be properly manufactured. These specifications shall be construed to define the poorest piece.

Grades.—White cedar boat boards will be divided into the following grades, and shall conform to the respective requirements specified below:

Clear grade.
Select grade.
No. 1 merchantable grade.
No. 2 merchantable grade.

Clear grade white cedar boat boards shall be flitch-sawn white cedar, practically free from knots or defects on one face; but one small knot not over $\frac{3}{4}$ inch in mean diameter or its equivalent will be allowed for each 4 square feet of surface on the opposite face.

Select grade white cedar boat boards shall be a specially selected grade of flitch-sawn white cedar. All boards shall be free from horn knots, heart centers, shakes, rot and dote. One knot $\frac{3}{4}$ inch in diameter or its equivalent will be allowed for each 4 square feet of surface.

No. 1 merchantable grade white cedar boat boards shall be a standard grade of flitch-sawn white cedar. Shall be free from loose heart centers, rot, shakes or dote; knots shall be no objection unless more than $\frac{3}{4}$ inch in diameter. One standard knot $1\frac{1}{4}$ inches in diameter or two knots not exceeding in extent or damage one $1\frac{1}{4}$-inch knot or its equivalent will be allowed in each 4 square feet of surface.

No. 2 merchantable grade white cedar boat boards shall be known as box-grade cedar; can be either flitch sawn or square

edged and suitable for rough work, crating or boxing. In this grade any piece that will not cut to over 50 per cent waste, and any length from 6 feet up will be allowed.

Lengths.—Standard lengths shall be from 12 to 20 feet long; average 16 feet or more.

Special lengths shall be from 22 to 30 feet long; average 26 feet or more.

Extra lengths shall be from 32 to 40 feet long; average 36 feet or more.

Widths.—Widths shall be measured in the center of the piece on the narrow face under the bark and shall be divided as follows: Standard widths, 6 inches and up; average 7 inches or more. Special widths, 8 inches and up; average 9 inches or more. Extra widths, 10 inches and up; average 11 inches or more.

Standard Thicknesses.—Standard thicknesses shall be 1 inch, 1¼ inches, 1½ inches and 2 inches.

Standard Measurement.—Even half feet shall be alternately counted out and allowed as a whole foot. Fractions under a half foot shall be dropped; fractions over a half foot shall be allowed as a whole foot.

Standard Quality.—All cedar may be shipped unseasoned unless otherwise specified, and all bark shall be peeled from board before shipment. If stock is required of suitable quality for resawing, specifications must so state. Unless otherwise specified, all lumber shall be inspected on the poorest side of the piece.

Notes.—(a) White cedar is commonly known as "juniper."

(b) Bidder must state in bid whether it is proposed to furnish *northern* or *southern* white cedar.

(c) Bids on Port Orford cedar in accordance with the latest edition of Navy Department leaflet specifications for Port Orford cedar, in lieu of white cedar in accordance with the within specifications, will be considered. Bidders must state

clearly if they are offering Port Orford cedar. Unless otherwise stated, it will be assumed that the bidder is offering white cedar in accordance with these specifications.

(d) *For Supply Officers.*—Requests and requisitions will state distinctly whether standard or special lengths are required. "Extra" widths should not be required with "special" or "extra" lengths unless absolutely needed for the character of work for which the lumber is required, as the extra widths combined with long lumber result in high prices.

PORT ORFORD CEDAR.

Quality.—Port Orford cedar lumber shall be cut from sound, clear logs, of best quality suitable for boat work. It shall be free from heart center, shake, rot and dote. Split ends over 12 inches in length will be deducted from lengths. Material shall be air-dried unless otherwise specified.

Standard Defects.—(a) The following defects will be considered as standard: A sound knot not over ¾ inch in diameter showing on two sides. A sound knot not over 1 inch in diameter showing on one side only. Two small knots not exceeding in extent or damage one 1-inch knot. A straight split not exceeding in length the width of the piece.

(b) Neither bright sap nor wane shall be considered a defect.

Defects Allowed in Regular Lengths.—(a) Pieces 8 to 10 inches (inclusive) wide shall be clear.

(b) Pieces over 10 inches and under 12 inches wide may have one standard defect.

(c) Pieces 12 inches wide and under 14 inches wide may have two standard defects.

(d) Pieces 14 inches wide and under 16 inches wide may have three standard defects.

(e) Pieces 16 inches wide and over may have four standard defects or their equivalent.

Defects Allowed in Special Lengths.—Special lengths shall show at least three-fourths heartwood on both sides, and the defects allowed will be based on the number of defects allowed in regular lengths as specified in paragraph above, and be in proportion to the lengths of such special-length boards.

Lengths. (a) *Regular Lengths.*—Port Orford cedar boards shall be 12 to 24 feet and up in length, and shall average not less than 75 per cent 18 feet in length and over, and at least 15 per cent shall be of the extreme length.

(b) *Special Lengths.*—Where special lengths are ordered, they shall be 16 feet and up, with 10 per cent 32 feet and up, and 50 per cent shall be 26 feet and up.

Widths.—(a) Port Orford cedar boards shall be 8 inches and up in width and shall average not less than 11 inches in width, with at least 50 per cent in 12-inch widths.

(b) Where special lengths are ordered, Port Orford cedar boards shall be 10 inches and up in width and shall average not less than 11 inches in width, with at least 50 per cent in 12-inch widths.

Thicknesses.—The thickness of Port Orford cedar boards shall in all cases be as specified.

Flitch-Sawed Lumber.—Unless otherwise stated in the requisition or contract, square edge lumber shall be furnished. If flitch-sawed lumber is called for, boards under 30 inches in width shall have two flitch edges; boards over 30 inches in width may have one flitch edge and one straight edge. In addition to the rules for measurements specified in paragraph below, flitched lumber shall be measured in the middle of the length on the narrow face under the bark or at the beginning of the wane, and the number of board feet contained shall be plainly marked on each piece.

Measurements.—Even half feet shall be alternately counted out and allowed as a whole foot. Fractions under a half foot are to be dropped. Fractions over a half foot are to be allowed as a whole foot.

REDWOOD LUMBER.

Grades. (a) *Uppers.*—Under the heading of uppers shall be included all grades of redwood of a higher grade than common, including pattern stock, clear redwood, sap clear, select, rustic stock or siding, finish, etc.

(b) *Sundry Commons.*—Under the heading of sundry commons shall be included common redwood of all grades, shop commons and bracket stock, subflooring and sheathing, etc.

Uppers. (a) *Pattern Stock.*—Pattern stock to be best grade of redwood, especially selected for pattern work, thoroughly air dried, soft, straight, close grained and absolutely free from sap, knots, splits, shakes, season checks, resinous matter and hard streaks. Clear or other grades of redwood not permissible. When cut in blade trimmers or with gouges and other hand tools it must not break down or crumble. When made into patterns it must hold a sharp edge which will not break down under ordinary usage.

(b) Pattern lumber shall be of such close grain as to be difficult to distinguish the difference between summer and winter growths in the annular rings and to show at least 20 rings to the inch. To be at least 75 per cent vertical grain on face side.

(c) Contractors will be required to furnish a certificate that the material is thoroughly air dried (not kiln or partly kiln dried), and a statement as to whether material is from Humboldt, Mendocino or other counties.

Clear Redwood.—Shall consist of lengths 10 feet and longer (except where otherwise specified), be good and sound, well manufactured, free from knots, shakes or splits, with the exception of season checks not to exceed 4 inches in length; will allow reasonable amount of bird's-eye, and a fair proportion in each shipment may contain pin knots and small, sound knots showing on one face only, and sap not exceeding 4 per cent of areas of all the surfaces and slight variation in manufacture.

Sap Clears.—Shall consist of lengths 10 feet and longer (except where otherwise specified), and shall conform generally to the grade of clear, except that it may contain sap in excess of 4 per cent of the area of the surfaces. Will allow discoloration of sap.

Clear and Sap-Clear Surfaced.—Shall be well manufactured and worked smoothly to uniform thickness. Will admit of slight roughness or variation in milling and defects mentioned under grade of clear and sap clear.

Select.—Shall consist of lengths 10 feet and longer, be good and sound, well manufactured, free from shakes or splits, with the exception of season checks not to exceed 4 inches in length. Will allow bird's-eye, pin knots, sap and 1 small, sound knot not exceeding 1 inch in diameter showing on both faces in each 3 superficial feet.

Standard Grade Rustic Stock.—Shall consist of lengths 10 feet and longer (except where otherwise specified). Will allow three or four sound knots $1\frac{1}{4}$ inches in diameter; one or two sound knots between $1\frac{1}{4}$ to 2 inches in diameter; sap with small knots; poor machining, which would make it unfit for clear.

Boards, etc.—All redwood boards, worked stock, ceiling, tank stock, interior finish, moldings, etc., may be specified to be of any of the above grades, as required.

Commons. *No. 1 Commons.*—Shall consist of lengths 10 feet and longer (except where otherwise specified), of sound lumber, and free from shakes, large or loose knots, or other defects that would materially impair its usefulness. Will allow slight variation in width and thickness; sap not to exceed 10 per cent of the area of all the surfaces.

No. 2 Commons.—Shall consist of lengths 10 feet and longer (except where otherwise specified), free from splits extending more than one-sixth of its length. Will allow knots (sound or unsound), sap, shakes and other defects which render it unfit for good, substantial construction purposes, but suitable for an inferior class of work.

Boards No. 1.—Shall be well sawn, 10 feet and longer (except where otherwise specified), free from shakes and splits, admitting any number of sound knots less than 2½ inches in diameter, and one knot, black or red, 2½ inches in diameter in each 5 superficial feet. Will allow slight variation in width and thickness; sap not to exceed 10 per cent of the area of all the surfaces.

Boards No. 2.—Shall consist of lengths 10 feet and longer (except where otherwise specified); will allow sap, loose and rotten knot shakes, and other recognized defects which render it unfit for good, substantial construction purposes, but suitable for an inferior class of work; also splits not exceeding over one-fourth the length of the piece.

Subflooring and Sheathing.—Shall consist of lengths 6 feet and longer (except where otherwise specified); will allow sap, loose and rotten knots, shakes and other recognized defects which render it unfit for good, substantial construction purposes, but suitable for an inferior class of work; also splits not extending over one-fourth the length of the piece.

Redwood Shingles. (a) *No. 1 Clears.*—To be strictly clear, sound timber, vertical grain, free from sap and all other defects, and well manufactured; 16 inches in length, cut 5 shingles to 1¾ inches in thickness at the butt when green; random widths, running from 3 inches to 14 inches wide. To be carefully packed in bunches 20 inches wide and 25 courses to the bunch; opening in packing not to exceed 1½ inches to the course.

(b) *Star A Star.*—Eight inches clear butt, 16 inches in length, running from 3 inches to 14 inches wide, 5 shingles to 1¾ inches in thickness at the butt when green. Will admit slash grain, dark sound timber, hard streaks and burls; also feather tips when 14 inches long; thick and thin clear shingles. Otherwise must be well manufactured and packed same as grade No. 1 clears.

(c) *Packing.*—All shingles to be packed full count, four bunches to the thousand, or short count, five bunches to the thousand.

General Rules. (a) *Seasoning.*—All redwood, unless otherwise specified, shall be rough, and may be partly seasoned. When dressed redwood is ordered, the grade shall be as specified. If ordered air-dried, it shall be thoroughly air-dried under natural conditions on sticks. If ordered kiln-dried, it shall be seasoned on sticks to partly air-dry before putting through the kiln. If kiln-dried, partially dried, and over kiln-dried, will be sufficient cause for rejection. If ordered partially seasoned, it shall be air-dried on sticks under natural conditions for a period of four months.

(b) *Measurements.*—Fractions of a foot are to be treated as follows: Even half feet are to be alternately counted out and allowed as a whole foot. Fractions under a half foot are to be dropped; fractions above a half foot to be allowed as a whole foot. Tapering lumber to be measured at one-third from the narrow end, unless otherwise specified.

(c) *Recognized Defects.*—Knots, knot holes, splits (either from seasoning, ring, heart or rough handling), shakes, rot, rotten streaks, wormholes, pitch seams, pitch pockets, solid pitch, chipped grain, torn grain, loosened grain, seasoning checks and sap.

(d) *Knots.*—Shall be classified as bird's-eye, pin, small, standard and large, as to size; round and spike, as to form; loose, incased, pith and rotten, as to quality.

A bird's-eye is a small knot not over $\frac{1}{4}$ inch in diameter.

A pin knot is sound and not over $\frac{1}{2}$ inch in diameter.

A small knot is sound and not over 1 inch in diameter.

A large knot is sound and any size over $1\frac{1}{2}$ inches in diameter.

OAK.

General.—(a) Requisitions must state the variety of oak desired—that is, white oak, red oak, etc. In the absence of

a specific statement as to variety, any variety of oak will be considered acceptable, provided it conforms to the specifications, and is of domestic origin.

(b) Material to be well manufactured, of good average widths and lengths, and to be free from unsound, loose and hollow knots, wormholes, knot holes, heart centers, rot, dote, shake or any other defects except as noted below. To have parallel edges and all ragged and bad ends trimmed off. To be of standard thickness when shipped dry. These specifications define the poorest piece in any given grade, but the respective grades must contain all pieces up to the next higher grade. Inspection shall be made from the poor side of the piece. The number of defects admitted in any piece of lumber shall be determined in accordance with the surface measurement as defined by these specifications. To be divided into the following grades of firsts and seconds, and when combined to contain not less than $33\frac{1}{3}$ per cent of firsts and the balance seconds for plain sawed, and not less than 25 per cent of firsts and the balance seconds for quarter-sawed lumber. To be in lengths from 8 to 16 feet, with not more than 20 per cent under 12 feet, not more than 10 per cent of 8- and 9-foot lengths, and not more than 15 per cent of odd lengths.

Standard Defects.—The following defects will be considered as standard:

One sound knot not over $1\frac{1}{4}$ inches in diameter.

Two sound knots not exceeding in extent or damage one standard knot.

Worm, grub, knot and rafting pin holes not exceeding in extent or damage one standard knot.

Each additional inch over 1 inch of bright sap will be considered as one standard defect.

Defects, not enumerated as standard defects, that do not damage the piece more than the standard defects allowed, will be considered as equivalent defects.

Ordinary season checks will not be considered defects, but if serious in character, so as to damage the lumber, they will be considered as defects.

Stain that will surface off in dressing to the standard thickness will not be considered a defect.

Plain Sawed Oak.

Firsts.—To be at least 6 inches in width and 8 to 16 feet in length.

Defects Allowed.—This grade may contain the following standard defects:

Pieces 4 to 9 feet, surface measure, shall be clear.

Pieces 10 to 15 feet, surface measure, may contain one standard defect or its equivalent.

Pieces 16 feet and over, surface measure, may contain two standard defects or their equivalent.

Seconds.—Seconds to be 6 inches in width and 8 to 16 feet in length.

Defects Allowed.—This grade may contain the following defects:

Pieces containing 5 to 7 surface feet may contain one standard defect or its equivalent.

Pieces containing 8 to 11 surface feet may contain two standard defects or their equivalent.

Pieces containing 12 to 15 surface feet may contain three standard defects or their equivalent.

Pieces containing 16 to 19 feet, surface measure, may contain four standard defects or their equivalent.

Pieces containing 20 feet or over, surface measure, may contain five standard defects or their equivalent.

Quarter-Sawed Oak.

General.—All quarter-sawed oak shall show figure on one face extending over an area of not less than 90 per cent of its surface.

Firsts.—Firsts to be at least 6 inches in width and 8 to 16 feet in length.

Defects Allowed.—This grade may contain the following defects:

Pieces containing 4 to 9 surface feet shall be clear.

Pieces containing 10 to 15 surface feet may contain one standard defect or its equivalent.

Pieces containing 16 feet and over, surface measure, may contain two standard defects or their equivalent.

Seconds.—To be at least 6 inches in width and 8 to 16 feet in length.

Defects Allowed.—This grade may contain the following defects:

Pieces containing 5 to 7 surface feet may contain one standard defect or its equivalent.

Pieces containing 8 to 11 surface feet may contain two standard defects or their equivalent.

Pieces containing 12 to 15 surface feet may contain three standard defects or their equivalent.

Pieces containing 16 to 19 surface feet may contain four standard defects or their equivalent.

Pieces containing 20 feet and over, surface measure, may contain five standard defects or their equivalent.

Measurements.

In the measurement of lumber of random widths, fractions of over $\frac{1}{2}$ foot as shown on the board rule must be counted up to the next higher figure; fractions of exactly $\frac{1}{2}$ foot and less as shown on the board rule must be counted back to the next lower figure. Tapering lumber in standard lengths must be measured one-third the length of the piece from the narrow end. All widths and lengths specified to be considered as inclusive.

WHITE OAK.

Grades.—White-oak timber will be divided into the following grades and shall conform to the requirements specified:

White oak for bending purposes for boat builders' use.

Flitch-sawed white-oak butts.

White-oak plank.

Special white-oak planks for upper strakes for boat builders' use.

Hewn white oak.

White oak for shaft logs.

No. 1 white-oak timber.

Measurement.—Fractions of a foot will be treated as follows: Even half feet will be alternately counted out and allowed as a whole foot. Fractions under a half foot will be dropped; fractions above a half foot will be allowed as a whole foot. Tapering lumber will be measured at one-third from the narrow end. Flitch-sawed lumber will be measured on the narrow face under the bark at the middle of the length.

White Oak for Bending Purposes for Boat Builders' Use.

NOTE.—Inspection will not be made at mills, but only after delivery at the navy yard specified. Bids based on inspection or delivery other than at the navy yard specified will not be considered.

Quality.—To be selected fresh-cut, unseasoned or water-seasoned white oak as specified, straight grained and free from knots, heart centers, shake, wormholes, wane or other defects except as noted below.

Defects Allowed.—(a) One sound knot of not over $\frac{3}{4}$-inch diameter will be admitted if located not over 12 inches from either end.

(b) Some small pin wormholes will be allowed provided they do not damage the piece for the purpose for which it is intended, but not over 25 per cent of the delivery may contain such defect.

(c) Bright sap will be allowed to the extent of 1 inch on one corner or its equivalent on two corners, running the entire length on 8-foot pieces or two-thirds of the length on 12-, 14- and 16-foot pieces.

Sizes.—To be properly manufactured and delivered full to the sizes specified. Thicknesses, 1½, 2 and 2½ inches to be 8 to 14 inches or over in width and to average not less than 12 inches; lengths to be as ordered. These sizes may be delivered flitch sawed or square edged. Sizes above 2½ inches in thickness to be square edged. Sizes 4 by 6 inches to be in lengths of 8 feet or in multiples of 8 feet. At least 30 per cent to be 16-foot lengths. Other sizes and lengths to be as ordered.

Flitch-Sawed White-Oak Butts.

Quality.—To be selected, sound, straight-grained white-oak butts, free from knots, shakes, wormholes, heart centers and other defects except as noted below.

Sizes.—To be cut to full thickness as specified and to be 12 to 24 inches or over in width, averaging not less than 16 inches in width. To be 8 to 16 feet in length and to average not less than 12 feet.

Defects Allowed.—One sound knot of not over 1¼ inches diameter, or its equivalent, to every 8 surface feet will be allowed. Some small pin wormholes will be admitted provided they do not damage the piece for the purpose for which it is intended. Bright, sound sap is not considered a defect.

WHITE OAK PLANK.

Quality.—To be selected white oak, well manufactured, cut full to the size, and to be free from shakes, heart centers, splits, large or unsound knots and wormholes, except as noted below. Some pin wormholes will be allowed provided they do not damage the piece for the purpose for which it is intended.

Sizes.—To be 8 to 16 inches in width, averaging not less than 12 inches. To be 20 to 37 feet or over in length and furnished in the following manner unless otherwise ordered:

30 per cent to be 20 to 24 feet long.
20 per cent to be 25 to 30 feet long.
20 per cent to be 31 to 36 feet long.
30 per cent to be 37 feet and over in length.

Plank 1 to 2 inches in thickness, inclusive, may be furnished flitch sawed, but when so furnished it shall not be mixed. Pieces edged on one side will not be measured as flitch, but will be accepted at its actual measurement one-third the distance from the small end.

Standard Defects.—(a) One sound knot of not over 1¼ inches in diameter constitutes a standard knot.

(b) Two or three small knots not exceeding in extent one standard knot.

(c) Wormholes, grub holes or rafting pin holes not exceeding in extent one standard knot.

(d) Heart centers, shake, rot or other defects not exceeding in extent one standard knot.

(e) Splits which do not exceed 12 inches in length; not more than 25 per cent of the whole number of pieces to be so split.

Defects Allowed.—This grade may contain the number of standard defects indicated below, when well scattered:

Pieces 20 to 24 feet long, 8 to 10 inches wide, may have two defects.

Pieces 25 to 30 feet long, 8 to 10 inches wide, may have three defects.

Pieces 31 to 35 feet long, 8 to 10 inches wide, may have four defects.

Pieces 36 to 37 feet long, 8 to 10 inches wide, may have five defects.

Pieces 20 to 24 feet long, 11 to 13 inches wide, may have three defects.

Pieces 25 to 30 feet long, 11 to 13 inches wide, may have four defects.

Pieces 31 to 35 feet long, 11 to 13 inches wide, may have five defects.

Pieces 36 to 37 feet long, 11 to 13 inches wide, may have six defects.

Pieces 20 to 24 feet long, 14 to 15 inches wide, may have four defects.

Pieces 25 to 30 feet long, 14 to 15 inches wide, may have five defects.

Pieces 31 to 35 feet long, 14 to 15 inches wide, may have six defects.

Pieces 36 to 37 feet long, 14 to 15 inches wide, may have seven defects.

Note.—As the width and length increase, a proportional increase of standard defects will be allowed. Wide pieces of lumber that would take several standard knots may have one large knot, equal to two or three standard knots, if properly located, provided there are no other standard defects.

Special White-Oak Planks for Upper Strakes for Boat Builders' Use.

Quality.—To be selected white oak, straight-grained, well manufactured, cut full to the size, and to be free from shake, heart centers, splits, large or unsound knots, wormholes or other defects, except as noted below. Some pin wormholes will be allowed provided they are so located that they will not render the piece unsuitable for the purpose intended.

Sizes.—Sizes to be as specified in requisition. Planks 1 inch to 2½ inches in thickness, inclusive, may be furnished square edged or flitch sawed. Pieces edged on one side will not be measured as flitch, but will be accepted at the actual measurement one-third the distance from the small end.

Defects Allowed.—One small, sound knot not exceeding ¾ inch in diameter, and wormholes, grub holes or rafting pin holes not exceeding in extent one ¾-inch knot, will be allowed to every 12 feet in length. Splits which do not exceed 12 inches in length will be allowed; not more than 10 per cent of the whole number of pieces to be so split.

Hewn White Oak.

Quality.—To be selected white oak, straight grained, and free from large knots over 3 inches in diameter or unsound

knots, rot, wormholes, wind or ring shake, strains, splits or other defects. To be lined straight the siding way and to be lined tapered in conformity with the growth of the tree. A long fair curve the other way will be allowed, but no short crooks or irregular curves will be admitted. No piece to have wane exceeding 2 inches on any edge. The top and butt to be cut square.

Sizes.—Sizes to be as specified in requisition. Dimensions to be taken at middle of timber.

Inspection and Measurement.—The four faces of log shall be hewn through sap to permit inspection, and sapwood, ax marks, or improper squaring will be deducted in measurement. The sizes for computation will be considered as the breadth and depth at the middle of the log.

White Oak for Shaft Logs.

Quality.—To be a selected grade of white oak, straight and close grain, tough, sawed outside of heart center, and to be free from knots, shakes, season checks, wormholes, splits, stained sap and other defects which would render the material unsuitable for shaft logs. Bright sap is not considered a defect, and a few scattering sound pin knots not exceeding $\frac{1}{2}$ or $\frac{3}{4}$ inch in diameter will be permissible under this specification, as such knots would not render the material unsuitable for the purpose intended.

Sizes.—Unless otherwise specified, the standard sizes shall be as follows:

For 30-foot motor sailing launches, $5\frac{1}{2}$ by $10\frac{1}{2}$ inches by 3 feet 6 inches.

For 33-foot motor sailing launches, $5\frac{1}{2}$ by $10\frac{1}{2}$ inches by 3 feet 6 inches.

For 36-foot motor sailing launches, $5\frac{1}{2}$ by $12\frac{1}{2}$ inches by 4 feet.

For 40-foot motor sailing launches, $6\frac{1}{2}$ by 11 inches by 4 feet.

For 50-foot motor sailing launches, $6\frac{1}{2}$ by 18 inches by 9 feet.

For 30-foot steamers, $6\frac{1}{2}$ by $15\frac{1}{2}$ inches by 7 feet 6 inches.

For 40-foot steamers, $8\frac{1}{2}$ by $15\frac{1}{2}$ inches by 13 feet 6 inches.

For 50-foot steamers, $10\frac{1}{2}$ by $19\frac{1}{2}$ inches by 10 feet 6 inches.

The above material to be properly manufactured, sawed full to the sizes given, and may be furnished in multiples of the lengths indicated. The material shall be suitably covered and the ends painted to prevent damage by checking during shipment.

No. 1 White-Oak Timber.

Quality.—To be selected white oak, straight grained and well manufactured, and to be free from unsound, loose or hollow knots, rot, wormholes, wind, ring or injurious shake, strains, splits or other defects, except as allowed below. To be suitable for purposes requiring strength, stiffness and durability. Heart centers, if any, shall be tight and well boxed. Material shall be furnished seasoned or unseasoned, as specified in the order.

Sizes.—To be cut square edged in sizes as specified, with sides and edges parallel. Unless otherwise specified, sizes 3 by 4 inches and up to 8 by 8 inches shall be 8 feet and up in length, and average not less than 14 feet; and sizes over 8 by 8 inches shall be 10 feet and up in length and average not less than 16 feet. Multiple lengths of lengths called for will be admitted.

Quality and Defects Allowed.—(a) Sizes up to 8 by 8 inches shall be free from knots exceeding 2 inches in diameter, and sizes over 8 by 8 inches and including 10 by 10 inches shall be free from knots exceeding $2\frac{1}{2}$ inches in diameter.

(b) All sizes under 10 by 10 inches may contain 1 inch of sapwood on all four corners or 2 inches on one corner, and not more than 50 per cent of the pieces may have 1 inch of wane on one corner for one-half the length or its equivalent. Sapwood and wane to be measured diagonally.

(c) Sizes 10 by 10 inches and up to 16 by 16 inches and over shall be free from knots exceeding $3\frac{1}{2}$ inches in diameter, and

shall show heartwood the entire length on all four sides and for three-fourths of the surface on each side or face, or its equivalent.

(d) Sizes 10 by 10 inches and up to 12 by 12 inches will admit wane not exceeding 1 inch on two corners extending not more than half the length, or 1½ inches of wane on one corner only, extending not over one-third the length of the piece, or its equivalent.

(e) Sizes 13 by 13 inches and over will admit wane not exceeding 1½ inches on two corners extending not more than half the length, or 2½ inches of wane on one corner only, extending not over one-third the length of the piece or its equivalent.

WHITE OAK KNEES.

Workmanship.—To be well manufactured and sided, sawed or hewn full to the sizes specified.

Quality.—To be selected white oak root knees and free from rot, shake, wormholes, strains, splits or other injurious defects which may render the knees unfit to be flitched up for boat work. Knees with defective arms will not be accepted.

Dimensions.—The knees shall be measured in accordance with plan incorporated in and forming a part of these specifications. The thickness of the body shall be equal to the siding at two-thirds the length of the arm clear of the body. The length of arms and bodies for the various sidings to be in accordance with Table 17.

Table 17.

Length of body.	Length of arm.	Net siding.	Throat.
Ft.	*Ft.*	*In.*	*In.*
8 or over	3½ to 4 or over	12	20 to 24
8 or over	3½ to 4 or over	10	20 to 24
7 or over	3 to 4 or over	12	20 to 24
7 or over	3 to 4 or over	10	20 to 24
6 or over	3 to 4 or over	12	20 to 24
6 or over	3 to 4 or over	10	20 to 24
4 or over	3 or over	6	18 to 20
4 or over	3 to 3½	5	18 to 20

Method of Cutting.—No knees will be accepted that contain the heart of the tree in the body of the knee. They must be so cut that the back of the body will not contain the heart center of the tree.

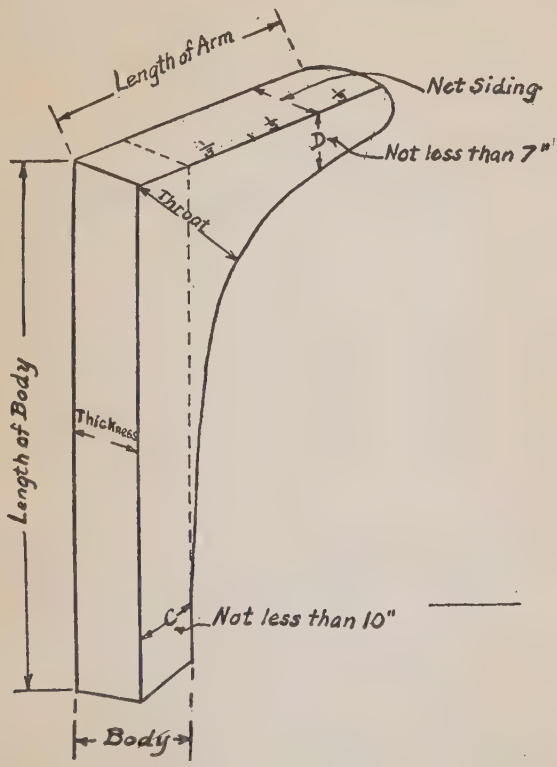

Fig. 49.—White Oak Knee.

BEECH, BIRCH AND MAPLE.

Each of the following defines one standard defect:

One knot 1¼ inches in diameter.

Two knots not exceeding in extent or damage one 1¼-inch knot.

Splits.—In lumber of random widths, one split not diverging more than 1 inch to a foot and not exceeding in length in inches the surface measure of the piece in feet; but not more than two defects of this character are admitted in a piece of the grade of firsts and seconds. Lumber sold as special widths stock will not allow more than one standard defect of this character in any piece.

Worm, grub, knot and rafting-pin holes not exceeding in extent or damage one $1\frac{1}{4}$-inch knot.

NOTE.—A straight split not exceeding 6 inches in length in one end of a piece of lumber 8 inches and over wide must be considered a defect.

Bright sap is no defect unless so stated under caption of the respective woods.

Heart and other defects not enumerated, where the extent or damage exceeds the equivalent of standard defects allowed, will not be admitted in the grade of firsts and seconds.

Standard lengths are 4, 5, 6, 7, 8, 9, 10, 11, 12, 13, 14, 15 and 16 feet, but not over 15 per cent of odd lengths are admitted.

In the grade of firsts and seconds the lengths are 8 to 16 feet, but there must not be more than 20 per cent under 12 feet and not to exceed 10 per cent of 8- and 9-foot lengths.

The standard thicknesses of hardwood lumber are: $\frac{1}{4}$, $\frac{3}{8}$, $\frac{1}{2}$, $\frac{5}{8}$, $\frac{3}{4}$, 1, $1\frac{1}{4}$, $1\frac{1}{2}$, 2, $2\frac{1}{2}$, 3, $3\frac{1}{2}$, 4, $4\frac{1}{2}$, 5, $5\frac{1}{2}$ and 6 inches.

Fractions of a foot are to be treated as follows:

Even half feet are to be alternately counted out and allowed as a whole foot. Fractions under a half foot are to be dropped; fractions above a half foot to be allowed as a whole foot. Tapering lumber to be measured at one-third from the narrow end, unless otherwise specified. Flitch-sawn lumber to be measured on the narrow face, under the bark, at the middle of the length.

Firsts, seconds and No. 1 common. Firsts and seconds are combined as one grade.

The percentage of firsts in the combined grade of firsts and seconds to be not less than 25.

To be ¾ inch thick, flitch sawed; two-thirds to work 9 inches wide, the remainder 10 inches. To be in commercial lengths of not less than 6 feet. To be partly seasoned, good quality beech, birch or maple, free from shakes, rot, black heart and unsound knots. Mill culls to be thrown out, and badly split ends to be deducted in measurements.

Firsts must be 8 inches and over wide, 10 feet and over long, and free from all defects, except that pieces 10 feet and over, surface measure, may have one standard defect or its equivalent.

Seconds must be 6 inches and over wide.

Standard defects are admitted according to surface measure, as follows:

6 feet, 1 standard defect or its equivalent.
9 feet, 2 standard defects or their equivalent.
13 feet, 3 standard defects or their equivalent.
18 feet and over, 4 standard defects or their equivalent.

No. 1 common must be 3 inches and over wide, 6 feet and over long. Pieces 3 and 4 inches wide, 6 and 7 feet long, must be clear; pieces 3 and 4 inches wide, 8 to 11 feet long, must work two-thirds clear face in not over two pieces; pieces 3 and 4 inches wide, 12 feet and over long, must work two-thirds clear face in not over three pieces.

Pieces 5 inches and over wide, 6 to 11 feet long, must work two-thirds clear face in not over two pieces; 12 feet and over long, must work two-thirds clear face in not over three pieces.

Not over 10 per cent of 6- and 7-foot lengths admitted in this grade.

HACKMATACK KNEES.

Grade.—To be best quality selected genuine hackmatack root knees. Spruce knees (sometimes called white hackmatack knees) or knees with defective arms will not be accepted. To be suitable to be flitched up for boat work.

Dimensions.—Body of the knee to be sided to the diameter of the arm, taken at the middle of the length of the arm. Three-fourths of the diameter of the arm at two-thirds of its length, clear of the body of the knee, to be considered the net siding. The lengths of arms and bodies for the various sidings to be in accordance with Table 18.

Table 18.

	Arm.		Body.	
In.	*Ft.*	*In.*	*Ft.*	*In.*
4	2	0 and up.	3	6 and up.
5	2	3 and up.	3	9 and up.
6	2	6 and up.	4	0 and up.
7	2	9 and up.	4	6 and up.
8	3	0 and up.	4	6 and up.
9	3	6 and up.	5	0 and up.
10	3	6 and up.	5	0 and up.
11	4	0 and up.	6	0 and up.
12	4	0 and up.	6	0 and up.

LIGNUM-VITÆ.

Quality.—To be high-grade, round or oval lignum-vitæ. To be well seasoned, generally straight and sound, free from injurious shakes, wormholes, excessive sap, large or unsound knots and other injurious defects, except as noted below.

Defects Allowed.—(a) Ordinary season checks will not be considered a defect.

(b) Sap is not considered a defect in pieces 3 inches in the shorter diameter and under.

(c) Slight heart and ring shakes are not considered a defect in pieces 13 inches in the shorter diameter and over.

Lengths.—Sizes 3 inches and under in the shorter diameter shall not be less than 2 feet in length. Sizes 4 inches and 5 inches in the shorter diameter shall not be less than 3 feet in length. Sizes 6 inches and up in the shorter diameter shall not be less than 4 feet in length.

TEAK.

Teak Timber.

Quality.—To be high-grade East India teak timber from Rangoon, Mulmein, Bangkok or Saigon (Java teak will not be accepted). The logs to be sound and free from injurious worm and bee holes and pronounced shakes. At least two-thirds of the length of each log shall be free from objectionable knots. The entire wane on any face not to exceed one-fourth the width of that face.

Shape and Size.—To be sawn or hewn square, four sides parallel sided, with at least 30 per cent of timbers 20 inches or over on narrow face, and the remainder not less than 15 inches on narrow face. To be not less than 15 feet, and at least 30 per cent to be 21 feet and up in length. In no case shall the taper exceed 2 inches on the whole length of the log. Ninety (90) per cent shall be straight logs, or, if cut to the curve of natural growth, shall not have more than 4 inches curve in the whole length of the log; the remaining 10 per cent may have a greater amount of curvature. Logs with curves shall have a curvature in one direction only, no return curves being admissible.

Measurement.—(a) Siding of the square to be taken at the middle of the square, $\frac{3}{4}$ inch being counted as a full inch any less fraction to be disregarded. In measuring lengths, 9 inches to be reckoned as a full foot; anything less than 9 inches to be disregarded.

(b) Nothing under the full dimensions to be shipped—*i. e.*, 14 feet 9 inches will not be shipped as 15 feet; nor will a square actually measuring only $19\frac{3}{4}$ inches be included under the 30 per cent of timbers 20 inches or over on the narrow face.

(c) The measurement will be expressed in board feet.

TEAK DECKING.

Quality.—To be high-grade East India teak from Rangoon, Mulmein, Bangkok or Saigon, well manufactured, sawed fair and full to the sizes given; to be straight grained, sound and

free from injurious worm and bee holes, splits, shakes, heart centers, sap, large or unsound knots, corner knots, wane and other injurious defects, except as noted below.

Defects Allowed.—Perfectly sound knots not exceeding 1½ inches in diameter will be allowed on the underside of the piece or in the lower half of the calking edges; some small bee or wormholes will be admitted on the underside of the piece, provided they do not damage the piece and thereby render it unsuitable for deck planking. One wide face must be clear.

Width, Thickness and Length.—The width and thickness to be as specified. The length to be not less than 14 feet and to average not less than 18 feet. The whole length of the plank to be measured in feet and quarter feet. Any fraction of a foot under 3 inches to be disregarded.

QUESTIONS FOR CARPENTER'S MATES.

Question 1.—What are the duties of a chief carpenter or carpenter aboard ship?

Duties.

Article 2331, N. I.

(1) The chief carpenter or carpenter shall perform the same duties in relation to construction stores and spare articles as are, in Article 2301, assigned to the boatswain in relation to equipment stores.

(2) He shall strictly comply with the regulations and other instructions concerning the care, preservation and repair of ships.

Fire Apparatus and Pumps.

(3) He shall see that all fire-extinguishing apparatus, except the steam fire pumps and their appurtenances (which are under the engineer officer of the ship), is kept in order and always ready for immediate use. He shall be held accountable for the good condition of all hand pumps, with their attach-

ments, pipes, drains, valves and other appurtenances, except such as are within the engineer compartments.

Repairing Damages in Action.

(4) So far as possible, he shall keep at hand and ready for use apparatus for repairing damages received in action.

Responsibility.

(5) He shall be held responsible for the cleanliness and good condition of all capstans and windlasses (except the engines), steering apparatus (except the steam steering engine), winches, pumps, valves, air ducts and pipes coming under the cognizance of the Bureau of Construction and Repair. So far as possible, the mechanics under him shall be utilized in the care and operation of the machinery under his charge, but additional men may be detailed, if necessary, to assist in these duties.

To Report Necessary Repairs.

(6) He shall report to the first lieutenant any repairs that he may deem necessary.

Draft of the Ship.

(7) He shall take the draft of the ship when entering and just before leaving port and report it to the navigating officer and officer of the deck.

(8) He shall see that the air and all other ports are kept in good order and water-tight.

Article 2332, N. I.

The duty of the chief carpenter or carpenter in action shall be to repair damages. His station at quarters and at all hands shall be as the commanding officer may direct.

SECTION 1.—(CHIEF BOATSWAINS AND BOATSWAINS.)

(Chief Carpenters and Carpenters.)

Article 2301, N. I.

(1) The chief boatswain (chief carpenter) or boatswain (carpenter) of the ship shall critically examine all boatswain's (carpenter's) stores and spare articles received, and shall report any defect or deficiency of which he may become cognizant at any time. Spare articles shall be tried in place to ascertain if they fit and are in all respects suitable for the purpose for which intended.

(2) He shall be accountable for the condition of all the equipment and stores of his department in use; and, for purposes of inspection, as directed by the commanding officer, he shall have access to such equipment and stores as are not yet issued for use by the general storekeeper of the ship.

(3) He shall exercise a careful supervision over expenditure of his stores, exert himself to the utmost to prevent any waste, and see that all issues are applied to the purpose intended. He shall be responsible for articles issued from the store rooms for use with the intention of being returned.

(4) He shall upon discovery of any loss or deterioration of his stores, or damage to or defects in the ship, at once report the same to the first lieutenant.

(5) When the ship goes out of commission he shall exercise great care that all his stores and articles of outfit are carefully tallied and properly stored without loss or injury.

SECTION 2.—RESERVE FORCES, AND VESSELS IN COMMISSION IN RESERVE.

Article 530, N. R.

(1) Each first-rate ship in reserve commission shall, when practicable, have the following complement: One commanding officer, one executive officer, one gunnery officer, one engineer officer, one medical officer, one supply officer, one gunner, one

boatswain, one carpenter, one machinist, one-half its full commission complement of all other officers, one-half its full commission complement of enlisted men.

A smaller complement, which shall include a commanding officer, a gunnery officer, an engineer officer, and a carpenter will be allowed for other ships in reserve commission. The crew of each ship in reserve shall be, in all departments, men trained in their duties.

(2) Each vessel shall be kept, as far as practicable, ready for general service within four days' notice, or as soon as the necessary personnel can be placed on board.

SECTION 4.—SHIPS IN COMMISSION IN ORDINARY.

Complement.

Article 570, N. I.

(1) The complement shall be prescribed by the Bureau of Navigation, and shall, if practicable, include an engineer officer and a carpenter.

HULL BOARD.

A board chosen from such officers as are attached to the ship, including a chief carpenter, or carpenter if there be one so attached, shall be appointed to carry out, as nearly as may be practicable, the inspections required by Article I, 2701, except as to point of time, which shall be as follows:

(a) The holds, store rooms, etc., shall be inspected monthly, and a special inspection shall be made once in six months with everything removed therefrom.

(b) Water-tight doors, hand pumps and other mechanical devices shall be frequently tested, the water-tight doors at least once in every two weeks and the pumps at least once a month. Steering gear, anchor gear, winches, boat cranes and other similar machinery shall be carefully protected and shall be tested once a month.

(c) The double-bottom compartments shall be kept closed and dry, and carefully inspected once every six months, unless existing conditions require more frequent inspections in special cases.

(d) The above inspections shall be made the subject of report to the department every six months and shall include a statement of such repairs as are considered absolutely necessary. A special report shall be made whenever deterioration such as cannot be controlled is discovered, and in case of accident or breakdown in any important machinery or mechanical devices.

SHIP ROUTINE.—DRAFT OF THE SHIP.

Article 2615, N. I.

(5) The carpenter shall take the draft of the ship when entering and just before leaving port, and report it to the navigating officer, and to the officer of the deck for entry in the log.

REPORTS FROM WARRANT OFFICERS.

Article 2626, N. I.

(1) The chief boatswain, chief gunner or gunner, chief carpenter or carpenter, and chief sailmaker or sailmaker, or in their absence, their mates, shall report to the executive officer twice daily, at 8 A. M. and 8 P. M., the condition of the ship and her appurtenances, so far as their respective departments are concerned.

ASSISTANCE TO BE GIVEN FIRST LIEUTENANT.

Article 2629, N. I.

(1) The carpenter shall assist the first lieutenant in the inspection and care of all compartments, water-tight doors, double bottoms and mechanical devices for the management and safety of the vessel, outside the engineer department.

EXAMINATION OF SPARS.

(2) He shall, in ships where it would be appropriate, when at sea, examine the spars during every morning watch and report their condition to the officer of the deck.

LIGHTNING CONDUCTORS.

(3) He shall frequently examine the lightning conductors and see that they are kept in good condition.

BATTENING DOWN HATCHES.

(4) He shall keep in place and ready for use at all times the apparatus used for battening down hatches.

AIR AND GUN PORTS.

Article 2633, N. I.

(1) When at sea no ports shall be opened without the knowledge and consent of the commanding officer, and they shall always be opened and closed by men especially appointed for that duty. Those on the lower decks shall be closed at sun-set unless special authority is granted to keep them open; and a report shall invariably be made to the officer of the deck when a port is opened or closed.

(2) Neither gun nor air ports shall be opened when there is any probability that water will enter to dangerous extent.

ASSISTANTS TO FIRST LIEUTENANT

Article 2304, N. R.

When the ship is placed out of commission the first lieutenant, chief boatswain or boatswain, chief carpenter or carpenter, chief boatswain's mate or chief carpenter's mate, shall not be detached or transferred until the equipage, equipment, stores and supplies issued for use to the first lieutenant have been satisfactorily accounted for and surveys covering shortages have been held and approved.

Article 3221, N. R.

(1) The chief carpenter, or carpenter, shall act as assistant to the first lieutenant, and shall perform such other duties as may be assigned him.

(2) In the absence of the chief carpenter, or carpenter, his duties shall be performed by the chief carpenter's mate.

Q. What are the duties and organizations of the carpenter's gang at the following drills and evolutions: General quarters, fire, collision and pioneers? State casualties and emergencies which may be expected in each case, and for which tools and appliances are to be provided.

A. *General Quarters.*—In this evolution the carpenter's gang, except the blacksmith, who is stationed by the anchor chains with the necessary tools to assist in unshackling to slip, is usually divided equally, rate for rate, forming two repair parties, one of which is stationed forward and the other aft, on the deck nearest the water-line, each being in communication, by telephone or voice tube, with the central station.

The necessary tools, material and appliances should be assembled at each of these stations to make temporary repairs in case of the following casualties and emergencies: To extinguish fire, to shore up a bulkhead against water pressure, to stop a leak caused by a shot hole, to repair breaks in water, steam or pneumatic pipes, to forcibly open or close water-tight doors and hatches that become jammed, to drive wooden plugs or wedges in small leaks, to operate the drain valves for pumping out any compartment, to clear away wreckage in any part of the ship.

Fire.—The station of the carpenter's gang at this evolution is at the scene of the fire with the necessary appliances for battening down hatches, closing water-tight doors and hatches, air ports, ventilation louvers, etc., connecting hose, opening and closing fire main valves, smothering flames, etc. The painters stand by the paint lockers to throw overboard, if neces-

sary, any combustible materials, which may be in those compartments.

Collision.—Station, at the scene of damage, with tools and appliances to shore up decks and bulkheads, forcibly open or close water-tight doors and hatches, sound compartments, repair breaks in water, steam and pneumatic pipes, operate drain valves for pumping compartments, rig hand pumps and hose for pumping compartments not otherwise drained, clear away wreckage, etc.

Pioneers.—Carpenter's mates, a blacksmith and plumber and fitter are usually detailed to land with the pioneers. They should be provided with the necessary tools and appliances for excavating, building temporary shelter, building and repairing bridges, making temporary repairs to boats, cutting timber for poles, fitting small pipe, cutting sheet iron and wire, making tent pegs, laying floors in tents, etc.

Q. Give a list of the wood-working tools required on a battleship.

A. Adzes, hollow and ship carpenter's; ship carpenter's augers; brad awls assorted; scratch awls; chipping axes; pinch bars; ship carpenter's bevels, double and sliding tongue; auger bits; countersink bits for wood and metal; expansive bits; german gimlet bits; double cut gimlet bits; twist drill bits; straight and square taper shank; screw driver bits, assorted; angular boring machine; miter box; corner bit and ratchet braces; mast calipers; inside and outside calipers, small; wood chisels, socket firmer, framing and wood turning; dividers; cooper's drivers; carpenter's mortise and marking gages; assorted gimlets; gouges, inside and outside bevel; wood-turning gouges; claw hammers; tack hammers; chipping hammers; shingling hatchets; complete set of calking irons for wood; drawing knives; spirit level; chalk lines; calking mallets; carpenter's mallets; hawsing mallet; ship's mauls; nail pullers; eye-cutting nippers; oil slips; oil stones, hard and soft; oil

cans; carpenter's pencils; carpenter's pincers; complete set of wood planes, including the following: beading, adjustable, block, bull nose, fore, hollows, rounds, jacks, jointer, matching, molding, plow, rabbet and smoothing; glue pot; cooper's punches; coppering punches; nail punches; spike punches; wood rasps assorted; saw files assorted; reamers for bit brace; carpenter's rules; complete set of hand saws consisting of the following: back saws, compass, cross-cut two-man, panel, hand cross-cut and rip and key hole; saw set; cabinet scrapers; screw drivers assorted; screw drivers spiral with bits; screw clamps, wood; bucket shaves; spoke shaves; steel squares; try-squares; measuring tapes, 100 feet and 50 feet; tool holder; carpenter's trammel; monkey wrenches; cold chisels; breast drill with set of drills; grind stone.

Q. Name the different kinds of lumber used aboard ship, and the purposes for which it is used.

A. *Ash.*—Used to renew thwarts, side benches, etc., in boats; to repair accommodation ladders, gratings, mess tables, built-in-tables in galleys, sculleries, etc., where wood work is scrubbed without painting or varnishing.

Cedar Boards.—Used for boat planking and graving pieces in boat planking.

Mahogany.—Repairs to mahogany furniture, chronometer boxes, cases, etc.

White Oak.—Framing, chafing battens, capping, beadings and other trimming for boats.

Poplar Boards.—Miscellaneous light, plain work, boxes, cratings, etc.

White Pine.—Miscellaneous light work, requiring soft wood, such as templets, etc., plugs or wedges for stopping leaks, pattern making.

Yellow Pine, Planks, Boards, Scantling and Decking.—Used for risings, flooring, gun platforms, etc., in boats, miscellaneous heavy work, repairs to decks.

Teak Plank.—Deck margins, decks on steamers and motor boats made of this material.

Spruce Poles.—Spars for boats.

Q. Give the thickness of wooden decks on a battleship and explain the manner of laying and calking a wooden deck.

A. See page 214.

Q. What are graving pieces? Why are they put in decks? Explain how they are fitted.

A. See page 215.

Q. Name the different calking irons for calking wooden decks and what each are made for.

A. *Dumb Irons.*—Used to first open and straighten the seams on new work.

Calking Irons.—Used to work the oakum into the seams.

Making Irons.—Used to drive the oakum down solid.

Spike Irons.—Narrow calking irons used to calk around bolt heads, spikes and other close places.

All irons mentioned above are made both straight and crooked, the crooked ones are made for calking in close corners alongside of hatch combings, etc.

Reefing Irons.—Used for cutting or reefing the pitch or marine glue out of seams.

Reefing Hooks.—Used for reefing oakum out of seams.

Q. Describe the operation of recalking a leaking wooden deck.

A. First reef the old marine glue out of the seams. Drive down the old calking, fill any soft places by driving in new oakum until the seams are about the same depth, and have a solid foundation. If there is space for another thread of oakum, calk it in and repay the seams.

Q. Describe the best method of bending wood.

A. First work the piece to be bent down as near the required size as possible, if it is the plank of a boat, it should be finished to the exact widths, length and bevels, which can be found by measurements and taking a spiling. The piece is then put into

the steam box, closed up, and saturated, or wet steam turned on, where it should be left about one hour for every inch of thickness. If the steam is very dry it will char the fiber of the wood and cause it to break when bent. Clamps or other means of holding the piece in place should be conveniently at hand, so that it may be bent as quickly as possible after taking it from the steam box.

A steam box may be improvised by making a long, tight box of four pieces of lumber, leaving one end removable, tap a steam pipe into one side near the center and a drain pipe in the bottom to drain the water from condensation.

Q. Describe the different methods of scarfing wood, and their uses.

A. See page 217.

Q. Describe the construction of a cofferdam for making repairs below the water-line.

A. See page 107.

Q. Describe the docking of a ship in dry-dock.

A. See page 101.

Q. What work, on the ship, is required to be done while in dry-dock?

A. See page 105.

Q. Name the various kinds of small boats used in the United States Navy.

A. See page 177.

Q. What are the methods of small-boat construction? Describe each.

A. There are two methods: Carvel built, when the planks are fitted edge to edge and calked, forming a smooth surface, and clincher built, when each strake of planking, except the garboard strake, overlaps the upper edge of the strake next above it.

Q. Name the principal members in the framing of a 30-foot motor sailing launch, giving them in the order in which they are usually assembled.

A. Keel laid first; stem; sternpost; transoms; midship frame; plank on bilges; clamps; filling blocks (deadwoods); risings; transom braces; breast hook; hoisting pads; keelson; lifting pads; remainder of planking; footlings; thwarts; stringer for foot board; cover pieces for foot boards; forward foot board; gun circle; forward platform; engine keelsons; cross piece for after foot board; after foot board; bulkhead; stern benches; spreading frames; capping; chafing battens; and rudder.

Q. What is a cant floor?

A. A crooked piece forming both floor and cant frame.

Q. What is a carling?

A. A piece fitted in a fore and aft direction between two beams, carlings are fitted on each side where a hatch passes through a deck.

Q. What is meant by the "molding of a frame"?

A. Its thickness athwartships.

Q. What is meant by the "siding of a frame"?

A. Its scantling or width in a fore and aft direction.

Q. What is the "garboard strake"?

A. The first outside plank or plate, next to and fastened to the keel.

Q. What is the "sheer strake"?

A. The uppermost of the outside plank of a boat.

Q. What is a "binding strake"?

A. A strake of planking having greater strength or thickness than the other strakes. (See No. 13, Fig. 35, page 210.)

Q. What is meant by the shifting of planking?

A. The distribution of ends or butts of planks, so that adjoining butts do not come to the same frame.

Q. What are rudder braces or gudgeons?

A. The eyes or sockets fastened to the sternpost, in which the rudder pintles turn.

Q. What are rudder pintles?

A. Metal pins attached by straps on the foreside of the rudder, which turn in rudder braces.

Q. What is the gulleting of a rudder?

A. Scores cut below and behind the pintles, to allow the rudder to be shipped and unshipped.

Q. What is the apron of a boat?

A. A strong piece of timber fitted in the inner side of the stem to which it is fastened with bolts. (See No. 2, Fig 35, page 210.)

Q. What are deadwoods?

A. Blocks of timber used as filling pieces, fitted against the sternpost on the after end of the keel, and on the inner side of the stem on the forward end of the keel.

Q. What are cant frames?

A. Frames in the fore and after body of a boat which are canted, and are not in line with the square body frames and the keel.

Q. What are floors (frame floors)?

A. The lowermost of the pieces of which square body frames are constructed and cross the keel.

Q. Describe the best method for making repairs to a boat which has a hole punched through the planking, without hoisting the boat out of the water. Describe the making of permanent repairs in this case.

A. See page 214.

Q. Describe the method of taking the spiling of a plank for a boat.

A. See page 212.

Q. Describe the method for taking measurements for the planking of a boat.

A. See page 213.

Q. What material is used for calking the seams of small boats?

A. Roven cotton.

Q. What is the unit of measurement of lumber?

A. A "board foot" which is a foot square and 1 inch thick, or 144 cubic inches.

Q. What is the rule for finding the number of board feet in a piece of lumber?

A. Multiply width by thickness in inches, multiply the product thus found by the length in feet and divide by 12.

Q. What is the difference between a hand rip saw and a hand cross-cut saw?

A. A rip saw has teeth spread a little at the point for clearance, the faces of the teeth are filed at right angles to the saw, the teeth are chisel shaped and have very little set; this saw is used for ripping. The teeth of a cross-cut saw are given clearance by very decided set to opposite directions on every other tooth, the faces of the teeth are filed at an angle of about 45° to the blade alternately; the cutting part of the teeth are the sides of the points; this saw is used for cutting off across the grain.

Q. Describe a back saw and its use.

A. A saw with thin blades and fine teeth, has a stiffening piece on the back; it is used in miter boxes and for cutting off light work where close joints are required.

Q. Describe a miter box and its use.

A. A miter box is an open-ended box or frame with saw cuts made into the sides at an angle of 45° to be used as a guide for the saw in cutting miters.

Q. Describe the following planes and their uses:

A. Block plane is a short, narrow plane used for smoothing across the end grain of wood; a jack plain is about 14 inches long, used for roughing off or first cuts; a smooth plane is about 8 inches long, used for smoothing the surfaces of wood; a fore plane is about 20 inches long, used for jointing and straightening up edges.

Q. Describe a bevel and its use.

A. A tool similar to a try-square, only that the blade is adjustable, and may be set to any angle.

Q. Name the three parts of a wooden door.

A. Stiles, rails and panels.

Q. What material is considered best for pattern-making, and why?

A. White pine, because it has a smooth grain, works easier, and shrinks and warps less when drying than other woods.

Q. What allowances are made in making patterns? Describe each.

A. Allowances are made for shrinkage and finish. (See page 216 for further data on pattern-making.)

Q. What is meant by "draft" of a pattern, and how much is usually allowed for it?

A. Draft is a slight taper given a pattern so that it may be more easily drawn from the mold. Ordinarily about $\frac{1}{16}$ inch to the foot is allowed.

Q. Describe the process of filing the various hand saws used by wood workers.

A. See page 222.

CHAPTER IV.

INSTRUCTIONS FOR SHIP FITTERS.

CARE AND PRESERVATION OF PORTABLE FITTINGS, SUCH AS BOAT DAVITS, LIFE LINE STANCHIONS, ETC.

All portable fittings such as boat davits, anchor davits, life line and awning stanchions, etc., should, when overhauled, have working parts thoroughly cleaned of rust and paint, and be well slushed with a heavy grease, such as Albany grease and graphite mixed, or tallow and white lead. A good opportunity for work of this kind is when ship is cleared for action at target practice, or admiral's inspection. These fittings, to insure their being kept in good working order, should be overhauled every three months if possible, and by all means in less than six months.

Much care should be exercised in doing this kind of work to prevent grease from getting on the wooden decks; a good plan is to have an old piece of canvas to work on.

RED-LEAD GUN AND ITS USES.

A red-lead gun is a cylindrical piece of steel or brass about 10 inches long, bored about $1\frac{1}{2}$ inches in diameter, with a plunger to fit inside, operated by a bolt threaded full length through a nut or cap on one end of cylinder. This cylinder has a point on the other end, threaded to fit a standard machine tap of about $\frac{3}{4}$ inch, or pipe tap of convenient size; through this point is a small hole about $\frac{3}{16}$ inch or $\frac{1}{4}$ inch in diameter. This tool is used for forcing red lead between plates to stop leaks that cannot be conveniently calked. To operate it, a hole is drilled near the leaks, and tapped to fit the point. Screw the point in tight, remove plunger and screw cap, and fill gun with red lead, mixed to the consistency of soft red-lead putty. In fact, the stiffness of the lead depends largely on the space to

be filled; if it is very much open, the lead should be as stiff as can be driven; and if close, of course thinner. Screw on plunger cap and force the lead through and behind the plate by screwing in the plunger bolt. Great pressure can be obtained by this process, forcing red lead into every crevice and often stopping leaks on which all other attempts have failed.

CALKING.

No attempt should be made to calk where rivets are not spaced for water-tight work. Have edge of top plate beveled. Use fuller first—which is a round-nose tool, slightly bent near the end; drive the lower edge of top plate, the thickness of the fuller, down hard on the bottom plate. Then next use a straight-faced calking tool, also bent near end, with a flat face at bottom, which, when resting on bottom plate, brings angular corner or edge in direct line with the seam; the curve near the end of this tool prevents it from cutting the lower plate. The object of this tool is to set the metal of the upper plate hard down on the lower plate. Care should be taken not to drive this tool too hard, which would raise the edge of the upper plate, thereby loosening the surrounding calking.

When fittings, such as pad-eyes, etc., exposed to the weather, run rust, this may be stopped sometimes by calking well all around the fitting; to do this, all paint should be removed from around the fitting, and the clean metals calked together. Where the plate to which the fitting is fastened is too thin to admit of calking, the fitting should be taken off and a stop-water (canvas soaked in red lead) put behind it. Care should be taken in putting on new fittings to always paint well the fitting, and the place to which it is to be fastened.

All calking shall be done in the most thorough manner, metal to metal. Care shall be taken in calking staples around beveled channels to avoid leakage due to irregularities caused by beveling.

Special care shall be taken to secure the most thorough calking of oil-tight members; and all edges of plates, angles and clips shall be carefully calked as necessary to insure absolute oil-tightness. Heads and points of rivets in way of oil-tight work shall be calked wherever necessary. All stiffeners, angles, etc., on outside of fuel-oil compartments shall be calked; and laps, seams and butts shall be calked on both sides where deemed necessary.

Wherever there is a possibility that rust streaks would be formed by the drip of water from behind connections, fittings, etc., suitable precautions shall be taken for their prevention by calking, by embedding in red lead, or by both, or by other approved means.

METAL CALKING TOOLS AND METHOD OF USING THEM.

(As employed at the works of the New York Shipbuilding Company of Camden, N. J.)

POINTS OF MACHINE TOOLS USED IN CALKING.

Straight Splitters.

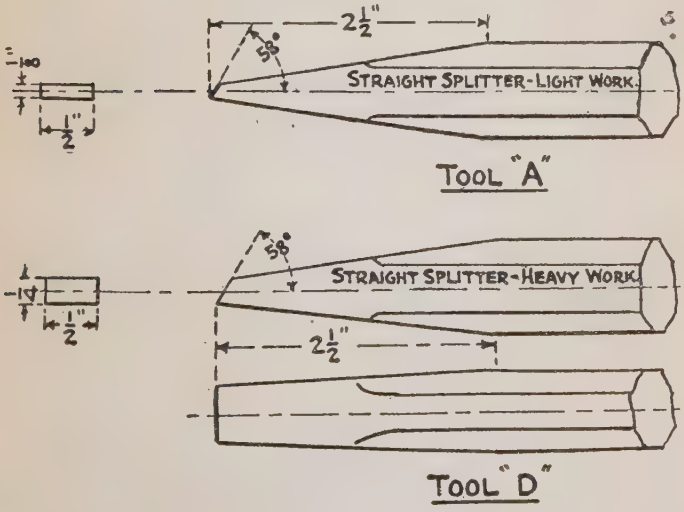

FIG. 50.

These are used for calking plate laps and the edges of angles, and for the first operation in calking butts. The cutting edges may be straight or slightly curved, and the projection of the face in a plane perpendicular to the length of the tool is $\frac{1}{2}$ inch long and varies from $\frac{1}{8}$ inch to $\frac{3}{8}$ inch wide. In general, the projected width of the face of a tool is not greater than the thickness of the plating calked; the $\frac{3}{8}$-inch tool is used on very heavy plating only. In calking overlapping edges a line is traced on the calking edge with the extreme point of the tool; the tool is then reversed and part of the metal which has loosened in the tracing operation is wedged under the calking edge, the point of the tool being held toward the faying surfaces. These tools are also used for chipping square edges to a bevel to facilitate calking. In calking butts a line is traced with the extreme point of the tool about $\frac{1}{8}$ inch to $\frac{3}{16}$ inch from the abutting edges on each plate; it is usually necessary to repeat this operation for 12½-pound and heavier plating.

Rough Tools, with Carding Faces.

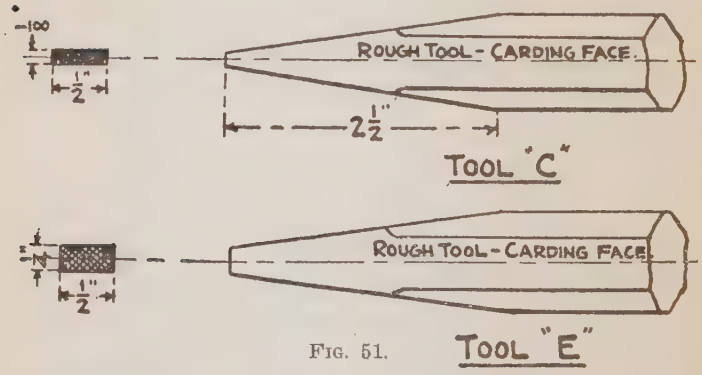

FIG. 51.

These are used for finishing flush calking, the heavier tool being used on 15-pound and heavier plating. They are also used for calking countersunk rivets where the rivet tool "G" cannot be used.

Bent Splitter.

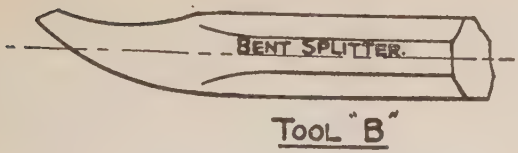

FIG. 52.

This is used only in inconvenient places where it is impossible to use a straight tool as "A" or "D."

Fullers.

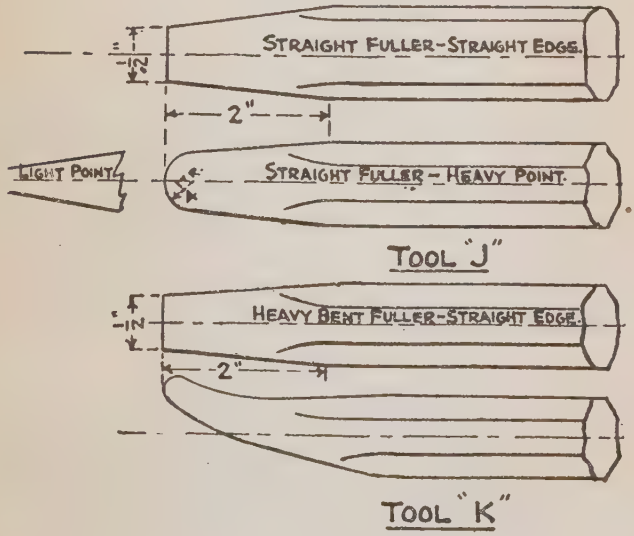

FIG. 53.

These tools are sometimes used for laying up the metal in way of a beveled calking edge and around liners, in order to provide a better bearing surface for the splitter used in calking. They are seldom used.

Smoothing Tool.

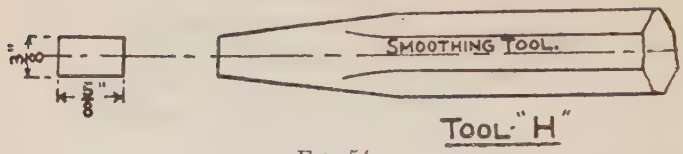

FIG. 54.

This tool is used mostly for removing gates, sprues and other projections from castings; it is also used in touching up leaky rivets, and is used in place of a heavy splitter, tool "D," in calking heavy plates, the narrow edge being used in splitting. A smooth tool with a face $\frac{1}{4}$ inch by $\frac{1}{4}$ inch is sometimes used in place of a splitter, tools "A" and "D," in calking liners.

Rivet Tool.

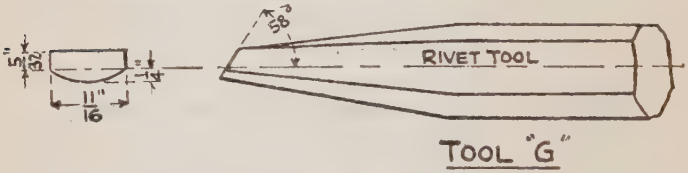

FIG. 55.

This tool is used for calking heads and points of countersunk rivets.

Grooved Butt Calking Tool.

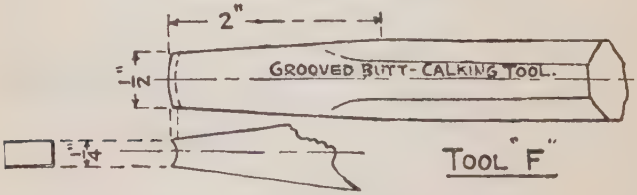

FIG. 56.

This tool is used for flush non-water-tight calking where appearance is a consideration. It is not efficient for water-tight work, and is not used on U. S. vessels at this works.

Short Bend and Long Bend Calking Tools.

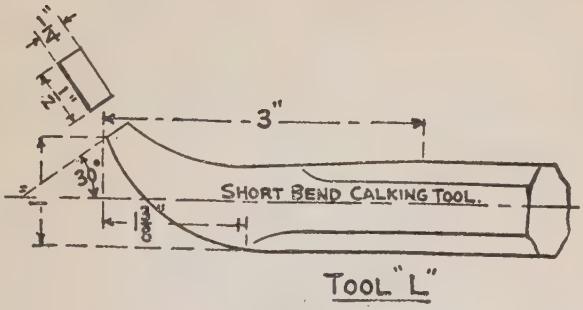

FIG. 57.

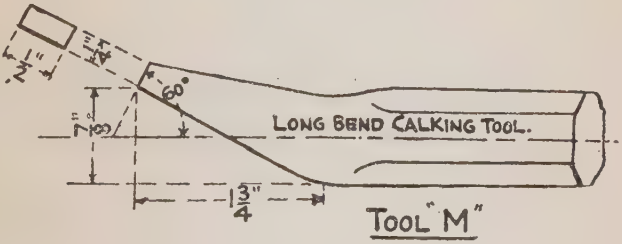

FIG. 58.

(Tools "L" and "M.")

These tools may be made with smooth or carding faces, and are used only in places where it is inconvenient to use the straight, smooth tool "H" or straight, rough tools "C" or "E."

Sections Giving Outline of Calked Laps and Butts and Application of Tools.

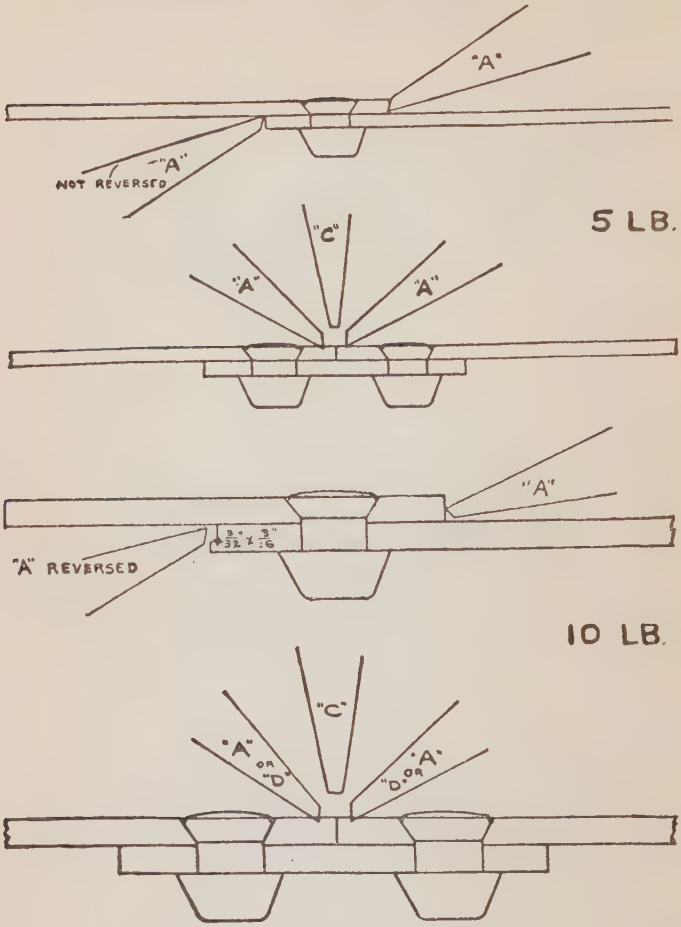

FIG. 59.

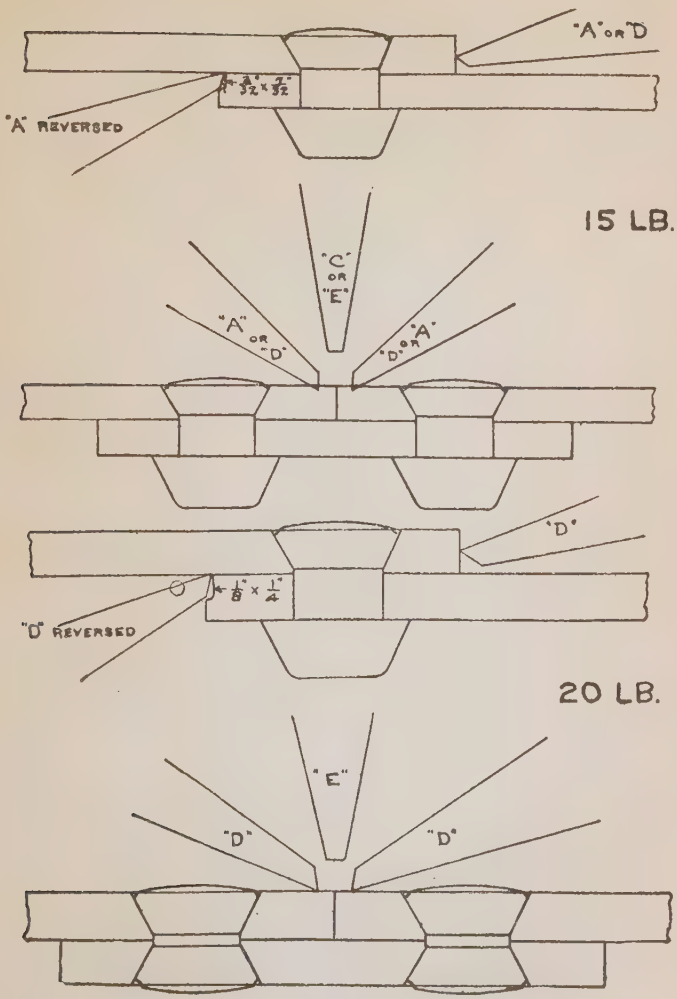

FIG. 60.

Sketches of Finished Butt Calking for 5-, 10-, and 20-pound Plating.

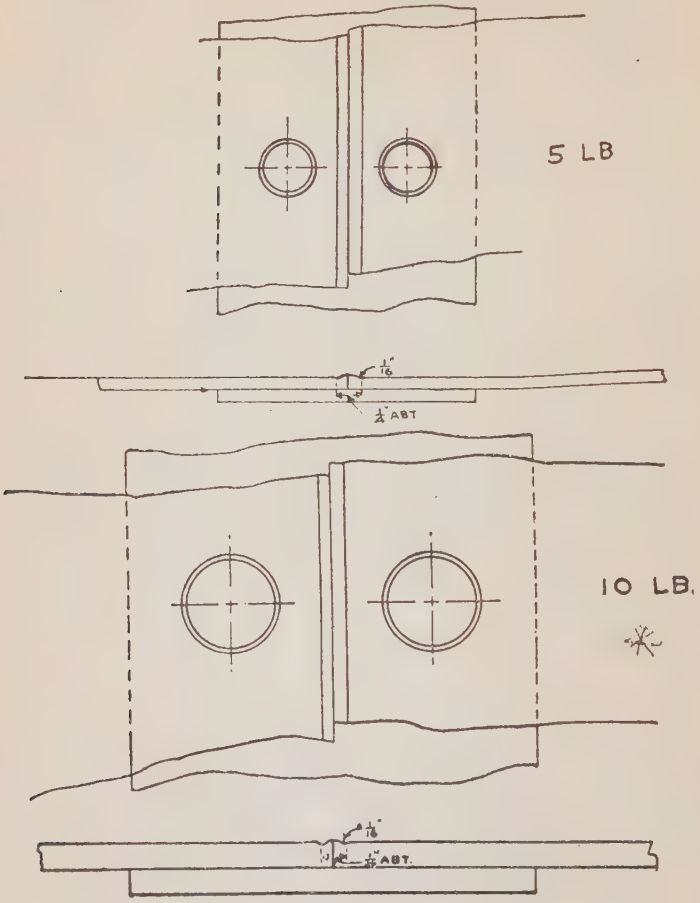

FIG. 61.

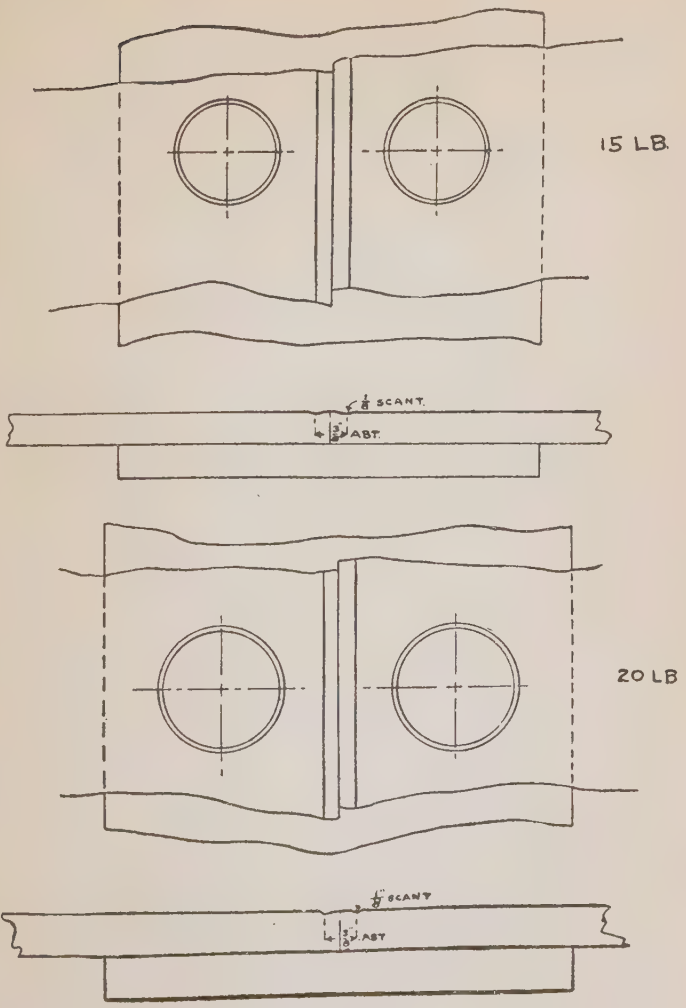

FIG. 62.

Sections of Angles and Plates.

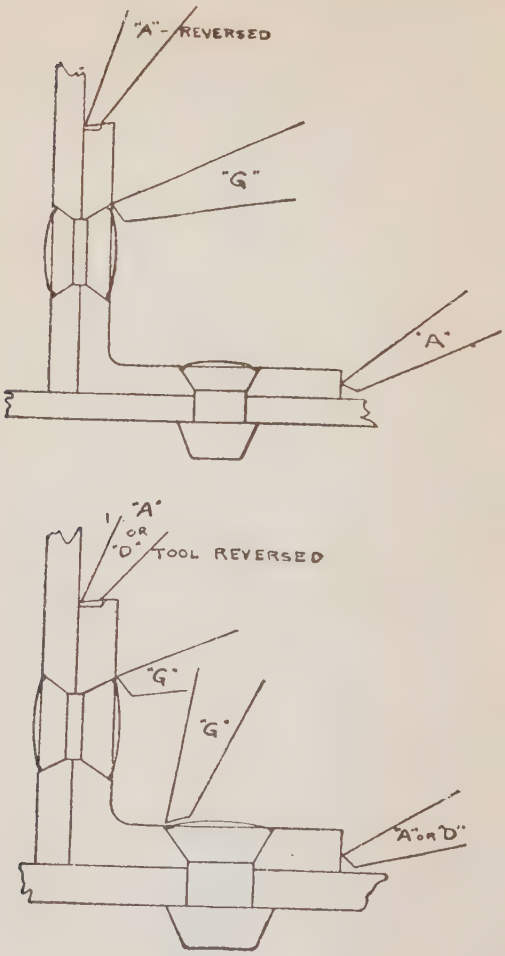

FIG. 63.

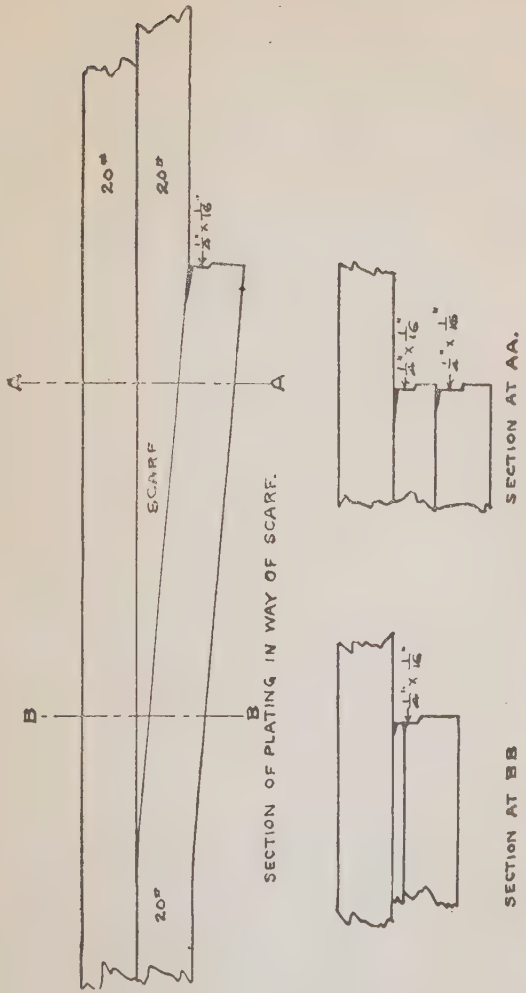
20ft
20ft
20ft
SCARF
A
A
B
B
SECTION OF PLATING IN WAY OF SCARF.
SECTION AT AA.
SECTION AT BB

FIG. 64.

CARE OF PNEUMATIC HAMMERS.

(Extracts from an article by Mr. G. H. Hayes, M. E., of the Chicago Pneumatic Tool Company.)

Pneumatic hammers, like all other classes of machinery, must receive proper care and lubricants in order to give proper results; therefore, one of the most important factors connected with their care is to keep them clean and well lubricated.

The material used in their construction is the very best that money can buy and is the result of long periods of experiment at an outlay of much time and money to get material that is best able to withstand the vibrations and wear and tear to which pneumatic tools are subjected. The moving parts are accurately and closely fitted, and when proper lubrication is neglected, which is the most unpardonable offense to which a piece of fine machinery can be subjected, they wear rapidly and in a very short time refuse to work.

As the air taken into the compressor generally contains some particles of grit and dust, it is almost impossible to prevent this foreign matter from entering the working parts of the hammer, causing the ports to become clogged and rendering it inoperative. The use of a poor grade or heavy bodied oil will also cause the same trouble. A good plan to follow in such cases is to clean by using benzine freely through the throttle handle. This dislodges all foreign matter and cuts the thick oil, which can then be removed by blowing air through the hammer.

Another source of trouble is sometimes located in the pipe line. Moisture carried in the air will rust the pipes and if a hammer is connected up without first blowing out the pipes a sediment is liable to be blown through into the tool, causing the valve or piston to stick. Rubber deteriorates very fast and particles of the hose may blow into the valve box and stop up some of the ports. Many times we have had hammers that would not operate, sent into the factory, and on dismantling them found the port holes plugged up with pieces of rubber,

or sediment from pipes, which when thoroughly washed out with gasoline, reassembled and properly oiled, would operate perfectly.

It is an excellent plan to submerge the hammer occasionally over night in a bath of benzine, then blow out under pressure the following morning, and lubricate with a good quality of light machine oil, or better still, our special Airoilene, which is manufactured especially for use with pneumatic tools. This not only materially assists in prolonging the life of the tool, but it will also be found to give better results.

Where the air is usually laden with foreign matter, we would recommend the use of strainers or filters to be attached to the tool or placed in the supply pipe, as the case may be.

Pneumatic hammers are subjected to many abuses, but space in this bulletin will not permit a review of the subject as a whole. However, we deem it advisable to direct particular attention to the fact that the most flagrant abuse to which the riveting hammer can be subjected is the use of short pistons. The objection to their use is minimized when they are properly made. When made by merely cutting off a standard piston, damage will result from the peining or spreading action, due to the soft center portion of the piston. The corners of the piston will also break off and lodge in the cylinder where the broken parts cut the inner casing, and, if it is not damaged beyond repair from this cause, it is only a question of a short time when the cylinder will crack or the handle be broken. When cylinders are cracked and handles and rivet sets are broken, hammers should be carefully examined to ascertain whether or not the workmen have substituted a short piston improperly made. This can only be done when the hammers are in service, as it has been found the workmen carry the short pistons with them and make the exchange after taking the hammer out of the tool room and again replacing the proper piston when turning the hammer into the tool room at the close of the day.

Pneumatic hammers are also abused in taking them apart and putting them together again. Some repairmen, instead of using a wrench or soft hammer in loosening or tightening the handle, use a hard, steel hammer, battering the parts badly and in many instances breaking them. The finished parts should never be struck with anything but lead or copper hammers, and even when this is done, good judgment should be used as to the strain put on the threads of the handle and the cylinder.

A great majority of men who operate pneumatic hammers in shops know very little, if anything, about the construction of the tools, and it pays any large institution using pneumatic tools to employ a competent man to look after them, see that they are properly lubricated and returned for cleaning when through with their work. I have been in foundries using large numbers of hammers in cleaning and chipping castings, where at the sound of the whistle the hammers would be thrown down, generally in the sand, and enough sand or grit would get into the tool, so that when the air was again turned on, the piston would stick fast after one or two blows. This necessitates a cleaning of the tool causing a loss of time in its use, of from 20 to 30 minutes.

In starting to drive rivets in cold weather, especially on structural or out of door work, the hammer should be warmed up enough to take the frost out of the steel, as a hard piece of steel full of frost is liable to break at the first blow; after a few rivets have been driven, there will be enough heat from the rivets to keep the frost out.

LUBRICATION OF PNEUMATIC TOOLS.

Unless pneumatic tools are kept clean, well lubricated and limited to the uses for which they are intended, they will not give the service for which they are designed. To keep the working parts of the tools clean and free from particles of

foreign matter, the first thought should be given to the air itself. Wherever possible, the air supply should be drawn from some point outside the building where the air is most apt to be clean, cool and dry. In any event, a strainer should be placed over the exposed end of the inlet pipe. Such a strainer can be easily made by covering the opening with wire netting over which one or two layers of muslin have been placed. While under ordinary conditions the strainer is not essential, it helps to avoid a great many possible lubrication troubles, and not only adds to the life of the valves, piston and glands of the air compressor, but assists in keeping the dirt and grit out of the working parts of the tools. A strainer should also be placed in the pipe lines leading directly to the pneumatic tools and special strainers are made to insert between the pneumatic hammers and the hose nipple.

In the lubrication of pneumatic tools, judgment should be used, for there are some machines or portions of them that require a light machine oil and others that require a heavy grease. Valves and pistons for both hammers and drills require a light machine oil such as our Airoilene, and as the compressed air which comes in direct contact with these parts has a tendency to drive the lubricant out through the exhaust, it is advisable to oil such parts freely and often, say every hour while the tool is in constant use. Such portions of the tools as the gear and crank cases of *"Little Giant"* drills to which the compressed air does not have direct access are best lubricated with grease such as our Airoilene grease. This grease may be forced into the crank cases through the dead air handle by means of a squirt gun or syringe or by the use of the *"Little Giant"* grease machine. A filling every 10 hours while the drills are in constant use gives the best results.

It is a good plan to immerse pneumatic hammers in a bath of benzine or kerosene over night and then blow them out under pressure the following morning, after which they should be thoroughly lubricated with Airoilene.

Keeping the tools clean helps the good work of lubrication, and users of pneumatic tools will be well repaid for any efforts they may expend along these lines.

SUGGESTIONS FOR OXY-ACETYLENE WELDING AND CUTTING.

Davis-Bournonville Process.

The process of oxy-acetylene welding and cutting is an art which is extremely difficult to acquire through reading instructions. Personal experience is very necessary. This can usually be acquired in any given line, in from one to three weeks, according to the ability of the operator, and the earnestness with which he applies himself. After he has taken instructions, and worked by himself for a few weeks, it will be found very advantageous for him to take new instructions for a brief period, as his experience will then enable him to comprehend the suggestions given, much more intelligently than in the first instance. In cases where it is impossible to obtain this personal instruction, and the work has to be done through written or printed directions, then a skilled and resourceful mechanic, who is familiar with metals, should be selected to operate the plant.

He should first thoroughly familiarize himself with the oxygen and acetylene generating apparatus and follow the directions for installation and operation closely.

He should learn the construction of the reducing and controlling valves, so that he can apply the proper gas pressures as shown by the tables in the catalogue.

After he has secured the gases ready for operation, he should properly attach the torches, seeing that there are no leaks, and that the torch-tips are of the proper size to weld the metal with which he begins to experiment.

He must be careful when seating tips in the torch-head, to screw them in until the ground seat fits tightly, otherwise part of the oxygen may pass into the acetylene chamber surrounding

the bottom of the tip, and produce an imperfect gas mixture, which would result in a defective weld.

It is absolutely necessary that the oxy-acetylene flame be accurately adjusted, as too much oxygen will oxidize the metal, and too much acetylene will carburet it, either excess being fatal to the best work. The strength of the weld will not be injured quite so much by a slight excess of oxygen, as it will by an excess of acetylene, but the neutral flame only is just right. Poor gases are very detrimental to this process of welding.

Important.—Nothing is more imperative for successful welding than dependable gas regulators and the adjustment of gas pressures for the torches by the regulators, instead of the gas cocks on the torches. The apertures in the torch-tips are bored accurately for the proper mixture of the gases at the pressures specified, and they cannot be expected to give good results at other pressures. Neglect to observe these conditions has caused more trouble than from any other source. With the gas flow controlled by the torch-cocks, disregarding the pressures for which the tips were constructed, there is likely to be as many kinds of flame as there are operators, or as the moods of a single operator, and nearly all of them wrong.

A gas regulator controlling 1800 pounds pressure to the inch cannot be expected to remain in good condition unless handled carefully, and if out of condition of course misleads instead of guiding the operator. Extreme care should be used in preventing oil or grease of any kind getting into the cylinder or hose connections of an oxygen regulator.

The valve of an oxygen cylinder should infallibly be opened very slowly, as quick opening puts a tremendous shock on the regulator.

Use of the Torch.—When ready to use the torch, open the valve in the oxygen tank *very slowly* until the full pressure in the tank is registered on the larger indicator. If the full

pressure of the oxygen tank is turned on suddenly the oxygen regulator may be damaged and its efficiency will be ultimately impaired by such method. Then open the valve in the regulator slowly until the pressure indicated by the smaller indicator registers the desired working pressure for the thickness of metal to be welded, as shown in the printed table. The working pressure, as shown by the smaller indicator, should always be increased from 0 to the desired pressure, instead of being turned on at high pressure and reduced. A low pressure regulator (having indicators registering only 500 pounds) should never be used on high pressure oxygen cylinders.

Now open the acetylene cock in the torch, and light the acetylene. Adjust the acetylene regulator so that there is a reasonably strong flame, then open the oxygen torch-cock until the oxygen reaches the full pressure; *again* looking at the small oxygen indicator to see that it is at the pressure desired. Then increase, or reduce, the pressure of the acetylene by turning the screw in the acetylene pressure regulator, until the two cones formed by the flame unite into one small cone. No oxygen should be added after this cone is perfectly formed, as if this is done there will be an excess of oxygen. The cone should be constantly observed, and occasionally tested, which can be readily done by adding a very slight pressure to the acetylene, which will immediately indicate itself by extension at the point of the cone. An excess of oxygen will diminish the size of the perfect white cone. When the cone is properly formed, it will be neutral, and will not burn or carburet the metal.

Operation of Torch.—In operation, the point of the white cone should touch the metal which is being welded, care being taken to hold the torch steadily, as actually touching the point of the torch to the metal may cause a flash-back. In such case, the gases should be turned off momentarily, and they will readily relight on bringing them again in contact with the hot weld.

The table which is published on page 372 will give the oxygen pressures best adapted for the tip in use, and they should be carefully studied, and frequently referred to, until the operator becomes familiar with the same. Both the oxygen and the acetylene gases should always be turned off at the service pipe, and at the oxygen cylinder, when welding is discontinued.

Beginners.—Beginners should commence by welding thin strips of iron or steel $\frac{1}{8}$ inch or less in thickness. These light metals can be welded without the addition of welding material. The torch should be given a rotary motion, with a slight upward and forward movement with each rotation. This will tend to blend the metal, and reduce the liability of over heating. The practice on this light metal should be continued for a day or two, or until the operator becomes instinctively familiar with the apparatus, so that he can devote his whole attention to the welding, without an unquiet feeling as to the operation of the apparatus itself.

There is a strong tendency with beginners to experiment with various kinds and thicknesses of metal, but they will become efficient far more quickly by mastering one kind of weld before undertaking another.

Points to be Observed.—See that the pressure of the acetylene generator is properly adjusted; ordinarily, it should not exceed 12 pounds maximum. The feeding motor should operate at about 10 or 11 pounds.

Have the oxygen indicator for the tip in use set at the pressure indicated in the table referred to above.

Adjust the acetylene regulator to make the proper flame as previously described. The pressure of either gas can be varied slightly by turning the cocks in the torch.

Be careful that there are no leaks in any of the connections, or in the rubber tubing, and that the torch-tip is always free from obstruction.

Always have an ample supply of gases, before commencing a job, as it is injurious to stop in the middle of the work.

While many operators work without protection to the eyes, it is advisable to wear tinted glasses or goggles.

If the flame is extinguished, the acetylene should be turned off, and the oxygen jet turned away from the heated surface of the metal, or cut off so that the oxygen cannot injure the metal.

In doing heavy work, if the burner is used continuously for a long time, or held in a confined space, it will become heated. In such case, turn off the gases and dip the torch-tip *only* half its length in cold water.

When working inside a boiler or tank or any small enclosure, two operators should be employed, so that one will be available to quickly turn off the gases in case of accident, such as the bursting of the hose.

In very heavy welding, two operators should always be used, so that one can relieve the other, and the work continued until finished, without interruption.

An excessive discharge of sparks indicates that too much oxygen is being used, and that the metal is being burned or oxidized. In very heavy welding, there will, of course, be a considerable volume of spark, even when the flame is neutral.

Care should be taken to remove the scale and clean the surface wherever the metal is to be welded.

Butt welding is preferable to lap welding, and easier to perform.

No one but a thoroughly instructed, experienced operator should attempt boiler welding.

In clearing the torch-tips, do not use steel; employ copper or some other soft metal.

The operator should occasionally examine the "flash-back" cylinder on the pressure generator, to see that the water is at the proper height, as shown by the instructions which accompany the generator.

Remember that anyone who does not insist that the thicker metals to be welded be beveled or chamfered to their full depth, and spoiled metal removed before welding, and who does not cause the edges of the metals to be thoroughly molten at all times, before adding the welding metal, and who does not make it a practice of touching or holding the welding metal close to the parts to be welded, when welding, will always be an inferior operator.

General Information.

Expansion and Contraction.—One of the greatest obstacles to success in welding by the oxy-acetylene process is the expansion and contraction of metals. While this difficulty pertains to every method of welding, it is more likely not to be regarded with sufficient importance in the oxy-acetylene welding process, because it frequently happens that the operator is not familiar with the conditions governing expansion and contraction, as is more apt to be the case with operators employing the longer established methods. It is not only easy to produce, but it is often difficult to prevent, strains caused by welding that will fracture the metal when it is cooled. This is particularly likely to be the case when some portion of the metal is very thin, and others thick. While the internal strain may not be sufficient to crack the metal, it can still be great enough to cause it to break when the ordinary working strain is added.

Preheating.—Usually, it is advisable to preheat metals of considerable weight or thickness, especially cast metals, before welding. This not only equalizes the internal strain, but very materially reduces the cost, as the weld can be made more quickly, and there is a much smaller consumption of gases, than if the weld had been made by the oxy-acetylene flame alone. This preheating can be accomplished in a gas furnace, or with an oil torch by surrounding the article to be welded with fire brick, or by means of charcoal, the latter being preferable for aluminum work. When the metal has been pre-

heated, sheets of asbestos paper can be placed over it to protect the operator, and prevent heat radiation, of course leaving the portions to be welded exposed to the welding flame. When the weld is completed, the torch flame should be passed over the weld, and the portions adjacent thereto, until the point where the last part of the weld has been made becomes of the same color as the surrounding metal. The whole metal should then be covered and allowed to cool slowly, drafts of cold air being most carefully avoided, except where a straight weld is to be made, and the preheating flame is used only to reduce the time of operation, and save the oxy-acetylene gases, and not to overcome expansion and contraction; the flame should never be directed against the weld itself, but the heat from the same should be evenly distributed, if possible, so that the article to be welded will be heated uniformly throughout.

Expand Before Welding.—It cannot be too strongly impressed upon the operator that it is far better to produce expansion before welding, if possible, than to attempt to care for the contraction afterward. Where there is a straight crack, it can usually be opened uniformly by heating the metal at each end, and keeping it hot while the weld is being made, when it will be found that the contraction caused by cooling has been provided for.

Where a piece of metal has been broken squarely in two, or a projection has been broken off, preheating will not be necessary, unless in heavy welds, where it is desirable to reduce the time of operation, and save the consumption of gases.

Never add metal with the welding stick, or wire, before the part to be welded is itself in fusion, and always have the welding stick in contact with or close to the welded metal, while adding the same to the weld.

In heavy welding, the parts to be welded must be brought to a red heat for a distance of, say, three times its thickness on each side of the weld up to 1 inch in thickness, increasing the distance reasonably as the weld exceeds this thickness.

Spots in Welding.—In heavy welding, it frequently occurs that there is a spot in the middle of a weld where the metal refuses to flow. The cause is that the metal to be welded is not hot enough surrounding this spot; the heat being radiated by the cold metal, consequently the added metal is chilled. The remedy is to play the flame in a radius of from $\frac{1}{2}$ to 1 inch around the refractory point until the surrounding metal is at a white heat, then apply the flame to the spot itself, and it will quickly unite with the other molten metal. In welding two pieces of metal together, care must be taken not to heat one more than the other, for if this is done the hottest piece will expand most and consequently may be longer, or the work may be thrown out of alignment, or the weld may crack in cooling, because of uneven contraction. This is more particularly applicable in cases where pieces are welded at sharp angles.

Proper-Sized Flames.—Do not use too small a torch for the thickness of metal to be welded, because in such case the heat will be radiated almost as fast as produced, and the flame will have to be held at one point so long before the weld can be accomplished, that the metal will be burned. Furthermore, it will take much longer to make the weld, and a much greater consumption of gases to do the work.

Too large a flame is equally bad, because the radiation will not be sufficient to lower the 6000° F. flame where it will not burn the metal which is already in a molten state. The proper flame will reduce the metal to a plastic molten condition, not too fluid, and of a width about equal to the thickness of the metal welded.

When welding heavy metal, be very careful not to blow a part of the molten metal on to a portion of the weld that is not in fusion, as it will make a defective weld at that point. If this should occur, do not fail to pass the flame over this chilled portion until it is again in fusion with the molten metal of the weld.

Cast Iron.—If the piece to be welded is of such form that it will crack in cooling it should be preheated, but not sufficiently to warp the metal, no part to be brought to a dark red except at the welding point. Charcoal is a good material to preheat with, as the heat is uniform and not excessive. The base of a blacksmith's forge, in connection with a sheet iron hood, can be used to good advantage. Another method of preheating is to have a fire-resisting table and to build up around the piece with brick in such a manner as to cause the heat to be confined and distributed evenly, leaving an opening through which an oil or gasoline torch-flame, or a gas flame, can be used. Of course, a heating oven is also convenient for this purpose. Whether the metal is preheated, or not, it should always be covered immediately after the weld is finished, and allowed to cool slowly. Some operators use slaked lime or very dry sand in which to bury the parts until they cool, but where the conditions will permit it is better to allow them to cool in the positions in which they were preheated.

There are many pieces of cast iron that can be welded without preheating, but where it is convenient to do so, it is advisable to preheat.

If the metal is more than $\frac{1}{4}$ inch in thickness, the edges should be chipped or channeled to a beveled form of 45° on each side. In the heavier welds, it is desirable to leave three slight points of contact to assist in adjusting and holding the broken parts in their exact original position, while welding.

To make the weld, the torch should be passed for some distance around the fracture and then directed on to the fracture until the metal becomes a cherry red. When this occurs, have an assistant throw on a little scaling powder, and when the metal begins to run, add cast iron from the cast iron welding stick. Powder should only be added when the metal does not flow well, but do not add too much, and finish with as little powder as possible, as an excess will tend to make the iron hard.

Much ingenuity can be used in overcoming the bad results of expansion and contraction, and in making repairs that might at first have appeared impossible. For instance, in welding the crown of the inside of an automobile cylinder, a piece can be cut from the outer shell of the water jacket, the crack repaired, and the piece which was removed welded into place.

Never attempt to reweld pieces that have been previously welded, or brazed, without cutting away all of the old metal.

Steel.—Steel of $\frac{1}{8}$ inch and less in thickness can be welded without the addition of any welding metal. Thicker metal should be bevelled or chamfered.

In welding steel, remember that the welding material should never be added until the edges of the metal to be welded are fused, or molten, at the place where the weld is being made. The welding metal should be of special wire, and in no case should the flame be held on to the weld until a foam is produced, as such foam is an indication that the metal is being burned.

In adding metal to the weld, hold the added metal so that it touches or is close to the metal to be welded. This enables the heat to be radiated from the welding metal rods to the body of the metal to be welded, whereas if the welding metal is allowed to drop through the welding flame, it probably would be burned to an injurious extent. Do not hold the flame steadily in the center of the weld, but use a circular motion with an uplifting movement in each revolution, always driving the molten metal toward the center of the weld.

In welding a crack in the middle of a heavy steel sheet, prepare the crack by chamfering the metal on each side of the same at an angle of 45° to the bottom; then, as previously directed, apply the welding torch to the metal beyond the end of the crack until it is expanded enough to open the crack perceptibly and make the weld while the metal is in this con-

dition, and usually it will be found that the expansion has been sufficient to care for the contraction in the weld when cooling.

A slight excess of oxygen is less harmful than an excess of acetylene, but care should be taken not to have an excess of either. When the weld is completed, do not forget to pass the torch over the same, and the surrounding metal, as previously instructed.

Aluminum.—Aluminum to be welded should be well scraped and cleaned, on account of oxidation, and to remove aluminum solder, or paint, which may have been previously used. If the weld is more than $\frac{1}{4}$ inch in thickness, it is advisable to chamfer the same.

The oxy-acetylene flame may be softened by using an excess of acetylene to an extent which will be indicated by the extension of the acetylene cone from 1 inch to $1\frac{1}{2}$ inches beyond the white cone. This excess of acetylene does not injure aluminum, but lowers the temperature of the flame, which is desirable in welding aluminum.

To make a good weld in aluminum, heat the whole piece to be welded by charcoal fire, or in a furnace, to about 300° or 400° short of the melting point, then cover the piece with asbestos, or by other means, leaving an opening where the weld is to be made, keeping the whole piece hot until the weld is completed. After the weld is finished, cover the piece completely to protect it against drafts, and so that it will cool very slowly to prevent shrinkage cracks.

It will be noticed when putting the welding flame on the aluminum at the fracture that the aluminum does not run together. An iron rod, of which the point is flattened, should be used to puddle the aluminum and this rod should be wiped frequently, so that it will not become coated with aluminum. A good aluminum flux will be found advantageous. Great care should be taken not to let the rod reach a red heat, as this

would cause oxide of iron to form on the rod, and this mixing with molten aluminum would make a defective weld.

The aluminum to be added should be in sticks or wire of special composition, as the quality of the welding aluminum has much to do with the success in welding.

In some cases temporary molds can be used to advantage in making welds. There are many pieces of aluminum that can be welded together without preheating, as will soon be learned by the experience of the operator. Lugs or projecting pieces broken completely off do not require to be preheated. Pieces broken out and entirely lost can, in nearly all cases, be fitted in or built up with little difficulty.

Brass.—Adjust the flame with the single cone as for steel welding. Keep the point of the white flame slightly away from the weld, according to the thickness of the piece, so that the heat will not be sufficient to burn the copper which is in the brass and also volatilize the zinc. If a white smoke should be created, remove the flame, as this indicates that too much heat is being used. A little borax should be used as a flux and would be of much assistance in brass welding. In brass welding it is desirable to use about one size larger tip than for an equal thickness of steel.

It should be remembered that a weld is really cast brass and will not compare with rolled sheet brass in strength.

Care should be taken not to breathe the fumes while welding brass.

Copper.—To weld copper, use the same kind of flame as for steel, but a much larger tip and flame must be employed for pieces of equal dimensions, because of the great radiating property of copper. Preheating is necessary when a large piece of copper is to be welded, otherwise the heat of the torch would be absorbed by radiation, and little left for the fusion of the metal. Copper will weld at about 1929° F., consequently the flame need not be of so high a temperature as for steel, and

it must not be concentrated on so small a surface, but on account of the radiation the total quantity of heat must be even greater.

Welded copper has only the strength of cast copper, but it can be rendered more tenacious by hammering.

The radiation of heat from copper can be much lessened by covering the same with asbestos sheets while welding.

Copper to Steel.—To weld copper to steel, first bring the steel to a white heat (the welding point), then put the copper into contact and the two metals will fuse together, making a perfect weld. When the copper commences to flow, withdraw the flame slightly, not to burn the same.

Blow-Holes.—To fill large blow-holes in brass or copper castings, preheat the casting to from 100° to 400° F., from the melting point, or about a bright red color. Have some of the same metal melted in a crucible ready to be poured. Apply the torch to the blow-hole to be filled, and when the walls of the blow-hole have been brought to the melting point, gradually pour in the metal, keeping the walls in fusion by the flame from the torch. Continue mixing the poured metal with the molten metal of the walls, until the blow-hole is filled.

High-Speed Steel.—To weld high-speed steel to ordinary machine steel, the end of the high-speed steel to be welded must first be heavily coated with soft special iron. This can be done without bringing the high-speed steel to the burning point. After being cooled, it can then be welded to an ordinary machine steel without burning, but it takes an experienced welder to make a good weld of this kind.

Cast Iron to Steel.—To weld cast iron to steel, cast-iron rods must be used as the welding material. The steel must be heated to the melting point first, as cast iron melts at a lower temperature. A very little scaling powder should be used.

Malleable Iron.—Welding malleable iron is difficult for several reasons. If brought to the melting point, and kept

there for any length of time, the metal becomes spongy. When brought to the melting point it is no longer malleable iron, but is practically cast iron.

To weld malleable iron, coat the edges to be welded with special iron, during which a little scaling powder may be used, and then finish the weld by the addition of special iron, as in steel welding.

In welding malleable iron "D-B" bronze is very advantageous, although both the annealed wire and cast iron are used successfully. Scaling powder is desirable with both the bronze and cast iron. Where it can be done, preheating is very desirable, as it lessens the tendency to hardness.

To fill blow-holes in malleable iron, use cast iron for a filler, and to avoid hard spots as much as possible, preheat the metal so that the oxy-acetylene flame is used to the least possible extent.

Cast Steel.—Certain grades of cast steel will weld better and flow easier than ordinary rolled steel, but there are some grades of cast steel, especially those of high carbon composition, which are very difficult to weld, and some which cannot be welded. In those most difficult to weld, the addition of one or two drops of copper melted into the weld will cause the metal to flow and permit a fairly good weld, but the copper is likely to harden the metal so that it cannot be machined, except by grinding.

Cutting Iron or Steel.—The steel to be cut should be heated by the oxy-acetylene welding flame to the melting point where the cut is to be started, then the jet of pure oxygen, under pressure, should be directed on the steel where the cut is to be made.

The cutting jet should be held a little inward, so that the under part of the cut is a little ahead of the top of the metal where the cutting takes place, and so that the oxide of iron produced by the jet can readily fall out of the cut. If in cutting, the jet is held in such a way that it progresses faster

on the top of the metal than on the bottom, the oxide of iron will accumulate in the groove or lower part, and fill the cut, preventing the oxygen from attacking the metal to be cut.

The torch must be held steadily with the cone of the heating flame touching the metal, but the torch itself must not touch the metal. Where accurate cutting is desired, a guide will be found of great assistance.

APPROXIMATE ACETYLENE AND OXYGEN PRESSURES.

Table 19.—Style "C" Welding Torches.

Pressures

Tip No.	Thickness of Metal.	Acet.	Oxy.	Tip No.	Thickness of Metal.	Acet.	Oxy.
	In.	*Lbs.*	*Lbs.*		*In.*	*Lbs.*	*Lbs.*
1	$\frac{1}{32}$–$\frac{1}{16}$	1	2	6	$\frac{5}{16}$–$\frac{3}{8}$	6	12
2	$\frac{1}{16}$–$\frac{3}{32}$	2	4	7	$\frac{7}{16}$–$\frac{1}{2}$	6	14
3	$\frac{3}{32}$–$\frac{1}{8}$	3	6	8	$\frac{1}{2}$–$\frac{5}{8}$	6	16
4	$\frac{1}{8}$–$\frac{3}{16}$	4	8	9	$\frac{5}{8}$–and upwards	6	18
5	$\frac{1}{4}$–$\frac{5}{16}$	5	10	10		6	20

Midget Torch for Light Sheet-Metal Welding.—Tips Nos 1 and 2 use same pressures as above. Tips Nos. 00 and 0 use proportionately less pressures, but owing to the difficulty of gaging lesser pressures, the proper flame is determined by its appearance.

Table 20.—Style "C" Two-Hose Cutting Torch.

Tip No. 2.		Tip No. 3.		Tip No. 4.	
Acetylene 2 to 3 lbs.		Acetylene 3 to 4 lbs.		Acetylene 4 to 5 lbs.	
Thickness of Metal.	Oxy.	Thickness of Metal.	Oxy.	Thickness of Metal.	Oxy.
In.	*Lbs.*	*In.*	*Lbs.*	*In.*	*Lbs.*
$\frac{1}{4}$	10	1	20	3	40
$\frac{1}{2}$	20	$1\frac{1}{2}$	30	4	50
$\frac{3}{4}$	30	2	40	5	60
1	30	3	50	6	70
$1\frac{1}{2}$	40	....	....	7	80
....	....	....	....	8	90
....	....	....	....	9	100

Adjust the acetylene reducing valve and the oxygen regulator for the pressures indicated in the table, for the size of tip and thickness of metal to be operated upon.

Example: For No. 3 tip, cutting 1-inch metal, acetylene pressure 3 to 4 pounds, oxygen pressure 20 pounds.

Open the acetylene valve in the torch, and light the acetylene. Open the oxygen thumb-screw valve in the torch slowly, until the neutral flame is secured. This flame should have the same appearance as the neutral welding flame. The cutting jet of pure oxygen is then turned on with the knob valve, with a slight pressure of the thumb, pushing the knob forward as far as the slot will permit. The cutting jet is shut off by pressing the knob back into place. It is not necessary to hold this valve open with the thumb while operating, as it will remain open or closed. Do not turn on the cutting jet until the preheating flame is correct.

After securing the proper preheating flame, turn on the cutting jet, and if necessary a slight readjustment of the thumb-screw valve will correct the heating flame. After securing the proper preheating flame in conjunction with the cutting jet, no further readjustment is necessary while in operation, and the cutting jet may be turned on or off at will.

The lower hose connection with "T" handle valves is for the acetylene, and the upper hose connection for the oxygen.

RUDDER HEAD.

If the rudder head is found to be leaking and it becomes necessary to set up on its stuffing box, care should be taken not to set it up so tight that the packing will pinch and cut the rudder-head shaft. It is best to set up a little at a time, watching the leak; if it decreases considerably, set up a little more, but this gland should never be set up extremely hard, especially while the ship is under way; it is better to allow a slight leak than to take chances on having the rudder head

freeze in the box. Sometimes, when the packing is old and hard, setting up on the stuffing box has very little perceptible effect. In this case it would be well to slack out the gland as far as possible, allowing it to leak freely for half an hour or an hour; this will allow the old packing to expand, absorb water, and loosen up some, after which the gland should be set up as instructed above.

SEA VALVES.

All sea valves should be operated weekly, with the wrenches from the respective deck plates; in this operation, valves which are habitually kept open should not be entirely closed, on account of bruising the disc of the valve against shell formation, etc., that might be on the seat. A mark should be made on the indicator which will show when the valve is within about $\frac{1}{4}$ inch of the seat. The operating mechanism should be kept well lubricated; and where the transmitting rods, universal joints, gears, etc., are in store rooms, much care should be taken, in stowing these places, to keep these devices clear, so they may operate freely.

The Navy Regulations require that when a ship is in dry-dock, all sea valves or other openings in the ship's bottom, upon which no work is being done, shall be closed over night.

PRACTICAL METHOD OF LAYING OFF A SHELLPLATE BY TEMPLATE.

In case of replacing a damaged plate, first get some thin battens of soft wood—white pine is best—about $\frac{1}{4}$ inch thick and 3 inches or 4 inches wide. Cut battens in lengths to reach over the outside line of holes of the upper and lower seams; lay the battens on the frames, covering the holes of same, the battens being held in place by spring clips or thumb screws, one batten on each frame; then lay the battens on top and bottom plates, covering all holes in the seams that are to be transferred to the new plate, tack the battens together where they cross, and proceed to mark the template, being careful to mark

the butt ends very neatly. Mark all holes on the battens; and after all the holes and butts have been marked, take down the template and lay it, with the marked side up, on the new plate; then either center-punch through the center of each hole onto the plate, or use what is known as a back marker. Do not fail to transfer all butt marks as neatly as possible to the plate, and be careful to mark all sizes of holes on the plate, also the side on which the countersinking is to be done. The plate is then ready to be punched, planed, etc.

BACKING OUT BOLTS AND PINS.

In backing out bolts or pins that are very tight or frozen with rust, a wooden block should always be used for driving with, or against, to prevent swelling the end or battering up the threads. Bolts that are frozen with rust may be loosened by hammering the head and parts through which they pass, and pouring a little spirits of turpentine all over them, which will soften the rust. Should this fail, a good plan is to heat the connection; if the work cannot be taken to the forge, a blow lamp may be used.

RIVETING.

(U. S. Navy Department Specifications. Appendix No. 4.)

General.

Material of Rivets.—Rivets for all structural work shall be of steel, unless otherwise specified, and shall conform to and pass the tests prescribed by the specifications for "Steel Hull Rivets and Rivet Rods" issued by the Navy Department. (Obtainable from Bureau of Supplies and Accounts.)

Rivets for Different Classes of Steel Material.—Unless otherwise specified or approved, rivets connecting medium steel parts shall be of medium steel, rivets connecting high-tensile steel parts shall be of high-tensile steel, and rivets connecting high-tensile and medium steel parts, where strength is of

special consideration, shall be of high-tensile steel. Where high-tensile steel plating is connected to medium steel frames and beams, etc., and in other connections of these materials where strength is not of special consideration, medium steel rivets may be used if desired. In special treatment steel and nickel-steel used for protective purposes, medium steel rivets shall be used unless specified in detail specifications.

Exceptions to the Requirements.—Where conditions occur such as are not definitely covered by the requirements herein, the riveting, together with the width of laps, straps and flanges of angle bars, etc., used in connection therewith, shall be subject to approval.

Rivet Schedules.—Structural working drawings shall specify the material of rivets, the types of heads and points, and the sizes and spacing of rivets to be used.

Where Special Approval is Required.—Where special approval is required herein it is intended that the matters involved shall, in general, be passed upon direct by the superintending constructor or by the construction officer.

Workmanship.

Hammer Marks.—Plates, angles, etc., shall not be marred nor show an undue amount of hammer marks around rivet holes.

Use of Calking Pieces.—Butts and edges of plates and butts of angles in strapped joints shall fit closely together after being riveted. Calking pieces shall not be inserted in any such joints in water-tight or oil-tight work, unless specifically authorized.

Punching, Reaming, Drilling, Tapping and Countersinking.

Punching.—Punches shall be kept in an efficient condition, and shall fit in the punching machines so as to punch holes fair and normal to the surface. Holes shall, in general, be punched

from the side which will form the faying surface; where this is not done they shall be punched small, and reamed, as necessary to obtain a smooth surface before the material is put in place. Burring of any kind between faying surfaces shall be avoided.

Unfair Holes.—Care shall be taken in punching and drilling to prevent unfair holes. Where such occur they shall be reamed out before riveting, and rivets suitable for the increased sizes of holes shall be used. No drifting to overcome unfair holes will be allowed.

Rejection of Material.—Where the number or the diameter of individual holes reamed out to an increased size for the purpose of removing unfairness is such as will impair the strength of the structure, the material involved shall be rejected unless satisfactory compensation be fitted.

Holes Punched Small and Reamed.—Rivet holes shall be punched small and reamed—(a) in work subject to test requirements for oil tightness; (b) in work where strength is of special importance; (c) in three or more thicknesses of material.

Holes Drilled, or Punched Small and Reamed.—Rivet holes through material of thickness corresponding to a nominal weight of 40 pounds or more per square foot shall be either drilled or punched small and reamed to the designed size.

Reaming.—In holes required to be punched small and reamed to the designed size, the increase in diameter, due to reaming, shall be at least $\frac{1}{8}$ inch.

Holes in High-Tensile Steel.—All rivet holes through high-tensile steel shall be drilled, except that where material is 12 pounds and less, nominal weight, the holes may be punched small and reamed.

Holes for Tap Rivets.—Drilling and tapping of holes for tap rivets must be done in such manner as to insure a first-class fit of the threads and to permit of the rivets being set up

tight. The minimum penetration of the threaded part should be 1 diameter. They should penetrate $1\frac{1}{2}$ diameters when practicable.

General Countersinking.—The angles of countersinks shall be as given on pages 403, 404 and 405 for heads of rivets. In plates and shapes of thickness corresponding to a nominal weight of $12\frac{1}{2}$ pounds and less, the depth of countersink may be the full thickness of the material; in plates and shapes of greater thickness the depth of countersink shall be approximately $\frac{1}{16}$ inch less than the thickness of the material. Where countersinking in accordance with the above is not suitable for one of the standard heads of rivets, of the required diameter, as shown on pages 403, 404 and 405, it shall be made to suit the nearest standard depth of rivet head. But in no case shall the depth of countersink be such that the head of rivet before driving is less than approximately $\frac{1}{16}$ inch above the surface of the plate or shape.

Special Countersinking.—Where rivets of the raised countersunk type are to be used the angle of countersink of the holes may, if desired, be increased 3° over the standard angle given on page 404 for head of rivet.

Treatment of Faying Surfaces.

Faying surfaces of plates and shapes shall be carefully cleaned and, except where specified otherwise, shall be given a protective coating before assembly. In way of fuel-oil compartments the coating material shall be a mixture of pine tar and shellac or other approved material; elsewhere red lead shall be used. In all cases the coating material used must be fresh and must be applied shortly before the members forming the faying surfaces are put in place. The faying surfaces in way of ship's fresh-water tanks shall be left uncoated.

Stop Waters and Oil Stops.

Use of Stop Waters.—Stop waters shall not be used to make good defective workmanship or materials, nor where the best practice requires metal-to-metal contact. They shall be used, in general, only where non-water-tight members pass through water-tight members, for the purpose of preventing leakage from one side to the other of the water-tight member.

Material of Stop Waters.—Stop waters shall be: (a) Tarred hemp felt; (b) flat lampwick or burlap, soaked in a mixture of red and white lead, or (c) flat lampwick or canvas, soaked in boiled linseed oil and then in red-lead paint.

Use of Oil Stops.—In way of oil-tight work, where the material is over the nominal weight of 7½ pounds, oil stops shall be used only under the general conditions specified above in regard to the use of stop waters, or where metal-to-metal calking is not practicable. Where the material is 7½ pounds, nominal weight, or less, oil stops may be used in seams, laps, stapling, etc.

Material of Oil Stops.—Oil stops for material, over the 7½-pound limit referred to above, when permitted, shall be ball lampwick coated with red lead and shellac (one part red lead, three parts clear shellac), or 10-ounce canvas soaked in a mixture of pine tar and shellac. For material of 7½ pounds and less oil stops shall be of 10-ounce canvas soaked for one-half day in clear shellac, then coated with the above red-lead and shellac mixture, or of 10-ounce canvas soaked in a mixture of pine tar and shellac.

Alternative Materials, Stop Waters.—The material of stop waters may be as specified for oil stops.

Use of Materials Other than Specified.—Other materials may be used for stop waters and oil stops when specifically authorized.

Materials to be Fresh When Used.—The materials used for soaking stop waters and oil stops must be fresh and the work in way thereof must be riveted up before the material has hardened.

Bolting and Riveting.

Bolting Up.—The proportion of bolts used relative to the number of rivet holes shall be as approved. In oil-tight work, generally, one bolt should be fitted for every four rivet holes.

Condition of Work.—All burrs and chips shall be removed, and buckles and lumps shall be faired out before any riveting is done.

Suitability of Rivets.—The rivets shall be properly proportioned for the holes, and they shall be of sufficient length in every case to insure a satisfactory point. Such cutting as is necessary should be done while the rivet is still a dull red.

Heating of Rivets.—Care should be taken that rivets be not burnt when heating.

Use of Power in Riveting.—In oil-tight work all rivets, as far as practicable, should be power driven. Where rivets are driven by power, the holding-on should also be by power.

Rivet Points.—All points shall be of adequate strength and properly centered, following, as nearly as practicable, the standard dimensions given on page 407. Snap points shall not be reduced from the standard sizes by using tools that have been ground down from proper sizes or that are otherwise imperfect.

Rivets Driven Cold.—Rivets less than $\frac{3}{4}$ inch in diameter may be driven cold. In water-tight joints where such riveting is employed canvas stops soaked in red lead or other approved mixture shall be fitted to secure tightness.

Testing Rivets.—All rivets driven shall be tested. Wherever found, loose rivets, rivets with slack or eccentric points, cracked or eccentric heads or with heads standing off from the surface shall be replaced.

Types of Rivets.

The standard types of heads and points are illustrated on pages 401 to 407; these should be followed so far as practicable. The use of other than standard types of rivets shall be subject to approval. The use of the respective standard types shall be in general accordance with the following table:

Types.	Class of work where used and detailed requirements as to types.
Pan heads	In all work, except where other types are permitted or required.
Button heads	In casings, etc., where required for finished appearance and when approved to suit types of power-riveting apparatus employed.
Countersunk heads	Where flush surfaces are required; in staples and boundary bars, etc., where the heads of rivets may require calking.
Countersunk heads	In work where heads countersunk are employed solely for purpose of providing for calking, the raised countersunk type may be used, if desired, instead of the flate countersunk type.
Coned necks	In all work with pan or button head rivets ½-inch diameter or over, except where otherwise approved.
Straight necks	In conjunction with drilled holes only.
Countersunk points	Where flush surfaces are required and where the rivet point may require calking.

In outside plating these points shall generally be such that while not forming a distinct projection they shall be full enough to hold a rule or straightedge off from the surface of the material. They should not in any work finish below the surface of the plates or shapes. Particular care should be taken in regard to compliance with the foregoing requirement in vessels of light construction.

Types.	Class of work where used and detailed requirements as to types.
Snap points	In framing and structural work generally, where flush surfaces are not required. This type of rivet may also be required in sheer strakes of outside plating, etc., when strength is of special importance, in order to avoid loss of material by countersinking.
Hammered points	Where specially approved or required.
Oval (Liverpool) points.	In exposed finished surfaces with material less than 7½ pounds, where watertightness under pressure is not required, this type may be used instead of the countersunk type.
Tap rivets	In connections of plates and shapes to armor, forgings, castings, and other material where use of through rivets is not practicable. These rivets may also be used as through rivets for attachments to outside of shell plating when plating is over 15 pounds nominal weight; in this case they shall be tapped into the plating and set up on the inside with nut, washer, and grommet.

Sizes of Rivets.

Rivets and rivet holes, as far as practicable, shall be in accordance with Table 21.

Table 21.

Weights of plates, nominal, in pounds.	Diameters in inches.	
	Rivets.	Rivet holes.
Up to 3, exclusive	½	9/16
From 3 to 7, inclusive	5/8	11/16
Over 7 to 8½, inclusive	3/4	13/16
Over 8½ to 12½, inclusive	7/8	15/16
Over 12½ to 19, inclusive	1	1 1/16
Over 19 to 29, inclusive	1 1/8	1 3/16
Over 29 to 39, inclusive	1 1/4	1 5/16
Over 39 to 49, inclusive	1 3/8	1 7/16
Over 49	1 1/2	1 9/16

Vessels of Special Construction.—In vessels of special light construction rivets of smaller diameters than those given in Table 21 may be used, subject to approval, where the flange of shape to which the plates are connected is not of sufficient width for the standard diameter.

Connection of Different Thicknesses.—Where plates of different thicknesses, which form part of a vessel's ordinary structure, are connected together, the size of rivets and the spacing where strength is of primary importance, shall be that required for the thicker plate. If water-tightness or oil-tightness is of primary importance, the size of rivets and the spacing shall be that corresponding to the thinner plate; if the thicker plate is more than double the thickness of the thinner, an intermediate size of rivet shall be used. Where, in a vessel's ordinary structure, the plates and angles or other shapes connecting thereto are of different thicknesses, the size and the spacing of rivets, in general, shall be that corresponding to the thickness of the plating.

Rivets in Stems and Sternposts.—Through rivets in stems, sternposts and heavy castings shall be $\frac{1}{8}$ inch larger than required for the plates connected thereto.

Three-Ply and Four-Ply Riveting.—Except in the case of double-strapped butts, the rivets for 3-ply and 4-ply riveting may be $\frac{1}{8}$ inch larger than the sizes required by the table on page 382, in order to facilitate drawing the material together.

Double-Strapped Butts.—In double-strapped butts, where the plating joined is 25 pounds or less, the rivets shall be one size smaller than given for the plating on page 382.

Tap Rivets.—Tap rivets shall be $\frac{1}{8}$ inch larger than the ordinary rivets required for the material in which the countersink occurs, except that taps into heavy forgings or castings shall be $\frac{1}{4}$ inch larger.

Rows of Riveting for Butt Connections.

Table 22 is given for ready reference to indicate, in general, the number of rows of rivets to be used for butt connections in plates of various weights. Tables 26 to 30 give the calculated efficiencies of joints and shall be used where special strength is required.

Table 22.

Connections.	Weights of plates, nominal, in pounds.	Riveting. (Symbols used: /, single row; //, double row, etc.)
Singe-butt straps and butt laps.	Under 7½	
	7½ and under 15	/
	15 and under 25	///
	25 and under 35	////
	35 and under 50	/////, or //// with alternate rivets or wide spacing in outer row.
	50 and over	As approved.
Double-butt straps.	15 and under 20	//-/// or ///-///
	20 and under 30	///-///
	30 and under 50	////-///
	50 and over	As approved.

In single- and double-strapped butts and treble riveting and over, the type of butt with alternate rivets in the outer row omitted or with wider spacing in the outer row should be used wherever practicable. Where this is not practicable in the case of double-butt straps, a "special" type of butt connection in accordance with Table 23 may be used. In these "special" butt connections the strap on the calking side shall take one less row of rivets than that on the opposite side, the alternate rivets of the outermost row in the wider strap being omitted.

Table 23.

Connections.	Weights of plates, nominal, in pounds.	Riveting. (Symbols used: //-///, calked strap, double riveted; uncalked strap, treble riveted, etc.)
Double-butt Straps, "Special."	20 and under 30	//-///
	30 and under 45	///-////
	45 and over	As approved.

Arrangement of Rivets in Rows.

In Plates.—Chain riveting shall be used generally where two or more rows of rivets are required in butts and seams of plating, except in vessels of special light construction where, in general, zigzag riveting shall be used.

In Shapes.—Zigzag riveting shall be used in shapes where two or more rows are required.

Distances Between Rows of Rivets, and to Edges of Plates and Shapes.

Distance Between Rows.—In seams and single-butt straps the distance from center to center of rows for chain riveting shall be not less than $2\frac{1}{2}$ diameters.

In butt laps and double-butt straps, where chain riveted, the distance between centers of rows shall be not less than 3 diameters.

Zigzag Riveting.—In zigzag riveting of plates, straps and shapes generally, the distances between centers of rows shall not be less than as given in Table 24.

Table 24.—Spacing in Rivet Diameters.

	Between rows.
For $3\frac{1}{2}$-inch rows	$1\frac{1}{2}$
For 4-inch rows	$1\frac{3}{4}$
For $4\frac{1}{2}$-inch rows	$1\frac{7}{8}$
For 5-inch rows	$1\frac{7}{8}$
For $5\frac{1}{2}$-inch rows	2
For 6-inch rows	2

Distance of Rivets from Edges.—Centers of rivets shall be not less than $1\frac{3}{4}$ times the diameter from the edges of plates or straps. In angles and other shapes the same distance from the edge shall be maintained; except that where the angles or shapes are planed or chipped to obtain a calking edge the distance from edge to center of rivets may be $1\frac{1}{2}$ times the rivet diameter.

Distances for Taps.—The centers of taps from the edge of plates and shapes should not be a less distance than that required by the $\frac{1}{8}$ inch less size of rivets for which they are substituted. Where taps are $\frac{1}{4}$ inch larger than rivets they should, in general, be $1\frac{5}{8}$ diameters from edge.

PLATE LAPS AND BUTT AND SEAM STRAPS.

Width of Laps and Straps.—The widths of laps and straps shall be not less than required by the foregoing and should not exceed same by more than $\frac{1}{8}$ inch for each row of rivets in the connections.

Thickness, Single-Butt and Seam Straps.—Single-butt and seam straps, when single or double riveted, shall be of the same thickness as the plates connected. Single-butt straps, when treble riveted or over, shall be at least 1.2 times the thickness of plates which they connect.

Thickness, Double-Butt Straps.—Double straps, where double riveted, shall be each one-half the thickness of the plate. Where treble riveted and over they will each be five-eighths the thickness of the plate. Where double straps are of the "special" type, having outer and inner straps of different widths, they shall each be five-eighths the thickness of the plate.

Thickness of Straps Increased if Rivet Holes are Countersunk.—Where rivet holes in ordinary double-riveted double straps are countersunk, the weight of the countersunk strap shall be increased to five-eighths the thickness of the plate to compensate for loss of material.

Where Plates Strapped are of Different Thicknesses.—Where the plates connected are of different thicknesses, the thickness of butt or seam straps shall be governed by the lighter plate.

Spacing of Rivets in Rows.

The spacing of rivets, in rows, as far as practicable, shall be in accordance with Table 25.

Table 25.

Connections.	Riveting. (Symbols used: /, single row; //, double, etc.)	Spacing in rivet diameters.
Plating: Seam laps and seam straps.	*Water-tight.*	
	/, ...	$3\frac{1}{2}$
	//, 10 pounds weight and under.....	4
	/// and ////, over 10 pounds weight	$4\frac{1}{2}$
	Non-water-tight.	
	/, ...	$4\frac{1}{2}$
	//, or over.....	5
	Oil-tight.	
	Throughout	$3\frac{1}{2}$
Plating: Single butt straps and butt laps.	*Water-tight.*	
	/, ...	$3\frac{1}{2}$
	////, ...	4
	//', all rows complete.....	$4\frac{1}{2}$
	///, alternate rivets omitted in outer row, 16 pounds and under.	4
	///, alternate rivets omitted in outer row, over 16 pounds.	$3\frac{1}{2}$
	////, all rows complete.....	$4\frac{1}{2}$
	////, alternate rivets omitted in outer row, under 35 pounds.	4
	////, alternate rivets omitted, or wide spacing, in outer row, 35 pounds and over.	$3\frac{1}{2}$
	/////, all rows complete.....	5
	/////, alternate rivets omitted, or wide spacing. in outer row under 45 pounds.	$4\frac{1}{2}$
	45 pounds and over, with alternate rivets, omitted in outer row.	4
	Non-water-tight.	
	/, ...	$4\frac{1}{2}$
	//, or over.....	As for W. T.
	Oil-tight.	
	In general	$3\frac{1}{2}$
	Wider spacing than $3\frac{1}{2}$ rivet diameters may be used if directed or approved.	

Connections.	Riveting. (Symbols used: //–//, double riveted; ///–///, treble riveted, etc.)	Spacing in rivet diameters.
Plating: Double butt straps.	*Water-tight.*	
	//–//, rows complete.....	4
	///–///, all rows complete.....	$4\frac{1}{2}$
	////–////, all rows complete.....	5
	Non-water-tight.	
	///–///, alternate rivets omitted in outer row, under 25 pounds.	5
	///–///, alternate rivets omitted in outer row, 25 pounds and under 30.	$4\frac{1}{2}$
	////–////, alternate rivets omitted in outer row, 45 pounds and under.	5
	////–////, alternate rivets omitted in outer row, over 45 pounds.	$4\frac{1}{2}$
	Oil-tight.	
	In general	$3\frac{1}{2}$
	Wider spacing than $3\frac{1}{2}$ rivet diameters may be used if directed or approved.	

Table 25—Continued.

Connections.	Riveting. (Symbols used: //–///, double-riveted strap on calking side, and treble-riveted strap on non-calking side, etc.—/, single row; //, double, etc.)	Spacing in rivet diameters.
Plating: Double butt straps, "Special."	*Water-tight.*	
	//–///, alternate rivets omitted in outer row....	4½
	///–////, alternate rivets omitted in outer row..	5
	Oil-tight.	
	In general	3½
	Wider spacing than 3½ rivet diameters may be used if directed or approved.	
Angles to plates, including staples.	*Water-tight.*	
	/, plate, or angle, 15 pounds and under.....	4½
	/, plate, or angle, over 15 pounds.....	5
	//, plate, or angle, 15 pounds and under.....	5
	//, plate, or angle, over 15 pounds.....	5½
	Oil-tight.	
	/, and //, in general.....	4
	Wider spacing than 4 rivet diameters may be used if directed or approved.	

Connections.	Riveting. (Symbols used: /, single row; //, double, etc.)	Spacing in rivet diameters.
Angles to plates.	*Non-water-tight.*	
	/, or over, for strength connections generally, including face plates and reinforcing bars to stiffeners, etc.	5
	/, or over, for bulkhead boundary bars, stiffeners, and connections where strength is not of special consideration.	8

The spacing of rivets in rows, in the locations given in Table 25-A, shall be used only as additions and exceptions to Table 25.

Table 25-A.

Structure.	Connections and riveting. (Symbols used: /, single row; //, double, etc.)	Spacing in rivet diameters.
Vertical keel where non-water-tight.	/, plates to outer and inner angles; angles to flat keel and to rider plate beyond inner bottom.	7
	/, to inner bottom.....	5
Longitudinals, where non-water-tight.	/, to outside plating.....	8
	/, to inner bottom.....	5
	/, plates to outer and inner angles.....	7

Table 25-A.—Continued.

Structure.	Connections and riveting. (Symbols used: /, single row; //, double, etc.)	Spacing in rivet diameters.
Transverse framing where non-watertight.	/, frames to outside plating	8
	/, reverse frames to inner bottom	5
	/, floor plates, lightened and solid, to clips on longitudinals and in connections to frames and reverse frames, etc.	7
	/, floor plates, lightened and solid, to clips on vertical keel, and on longitudinals in wake of docking keels.	5
	/, floor plates, flanged bracket type, to clips on longitudinals and vertical keel, and in connections to frames and reverse frames.	5
	. floor plates, flanged bracket type, to clips on longitudinals and vertical keel, and in connections to frames and reverse frames.	7
Decks and platforms.	/, beam knees (ordinary)	4
	//, beam knees (ordinary)	8
	/, plating to beams below the lowest complete water-tight deck, and elsewhere in way of auxiliary machinery.	5
	/, plating to beams on and above lowest complete water-tight deck.	8
W. T. and O. T. bulkheads below lowest complete W. T. deck.	/, stiffeners on non-calking side of bulkhead	6
	/, stiffener if calked water-tight	5
	/, stiffener if calked oil-tight	4½
	/, stiffeners on both sides of bulkhead, through riveted.	4
W. T. and non-W. T. bulkheads above lowest complete W. T. deck.	/, seams, water-tight plating	4
	/, and over, plating non-water-tight, 5 pounds and under to angles and deck beams.	4½
	/, stiffeners	8
	/, boundary bars to sheer strake, stringer plate, and other important longitudinal strength members.	8
Seatings.	/, and over, for engines, boilers, air compressors, etc.	6
In way of armor.	/, brackets, beam knees, and web frames	3½
	//, brackets, beam knees, and web frames	7
	/, and over. In horizontal flanges of angles behind armor, without wood backing: Barbettes, conning towers, etc., to decks.	3½
	/, and over. In horizontal flanges of angles behind transverse armor to decks.	As approved.
	/, and over. In vertical flanges of deck angles behind armor, without backing.	4
	//, and over. In butt straps connecting armor plates, without backing.	As required by table for single butt straps.

Table 25-A.—Continued.

Structure.	Connections and riveting. (Symbols used: /, single row; //, double, etc.)	Spacing in rivet diameters.
Turrets and foundations for turrets and guns.	/, and over. In structural work generally, rivets in shear.	5
	/, and over. In structural work generally, rivets in tension.	4
	/, and over. Supporting structures in way of turret and gun foundations, including bulkheads and stiffeners.	5
Miscellaneous and general.	Quilting rivets, as approved.....	8 to 16
	Angles. Angles entering into the continuous longitudinal strength of the vessel shall in general be strapped at butts with a bosom bar having at least three rivets on each side of the butt for every row of rivets. The rivet holes in such bars shall, as far as practicable, be kept out of line transversely in order to avoid reductions of the longitudinal strength.	
	Bulkhead Liners. Liners at bulkheads shall be so riveted that the longitudinal strength of the structure through a water-tight or oil-tight frame will be equal to the strength at a non-water-tight frame. The rivets shall be suitably spaced around the perimeter of the liner for oil- or water-tightness as may be required. When directed, or approved, only the alternate rivets in the boundary bar in way of the liner shall extend through the plating.	

Modification of Spacing.—Where the spacing in rows as given in preceding tables cannot be followed exactly, the general practice should be to space closer, as may be necessary, to obtain equal divisions, but in no case shall the spacing in rows be closer than three diameters.

CALCULATED JOINTS.

Where the strength of joints is calculated this shall be done in accordance with the following instructions. If for special reasons adherence to these instructions for calculations is considered inadvisable, the matter shall be referred to the bureau

Basis for Strength.—The strength of the joint, so far as practicable, shall be equal to the strength through an adjacent line of non-water-tight spaced rivets in the same member.

Tensile Strength of Medium Steel.—For medium steel plates the value of 63,000 shall be used for the unit tensile strength

Tensile Strength, High-Tensile Steel.—For high-tensile steel plates, the value to be used for unit tensile strength shall be the same as the minimum tensile strength specified for the material.

Joints in Special Treatment Steel.—For calculated joints in special treatment steel the method proposed to be used shall be specifically referred to the bureau.

The following values shall be used for the unit shearing strength of the rivets, in single shear:

Shearing Strength, Single Shear.

Medium steel rivets in medium steel plates.....50,000
Medium steel rivets in high-tensile steel plates.....43,000
High-tensile steel rivets in high-tensile steel plates....64,000

Shearing Strength, Double Shear.—The value of a rivet in double shear shall be taken as one and eight-tenths times the value given in above paragraph for single shear.

Area of Rivet for Shear.—The shearing strength shall be based upon the tabulated size of the rivet hole and not the diameter of the rivet before it is driven.

Bearing Value.—The bearing value when required in connection with these calculations shall be taken as double the tensile strength of the material.

Efficiencies of Joints.

The following tables of efficiencies of joints are based upon an assumed ratio, tensile strength of plate to shearing strength of rivets, of 63 to 50. Countersinking, where allowed for, is taken as extending the full thickness in all weights of material. Efficiencies are for joints of indefinite extent and do not cover special conditions which may occur in the case of a particular joint required to be of maximum strength.

Table 26.—Efficiencies of Joints, Laps and Single Straps.

Rivet diameters, in inches.	Weights of plates, in pounds.	All rivet rows complete.												
		/		//		///			////			/////		
		Spacing of rivets in rows—rivet diameters.												
		3½	4½	3½	4	3½	4	4½	3½	4	4½	3½	4	5
½	7	*.62	.51	* 62	*.67									
	[illegible]	.61	.48	[illegible]	[illegible]									
	8	.58	.45	*.61	*.66									
	8½	.54	.42	*.61	*.66									
	9	.53	.40	*.61	*.66									
	8½	.63	.50	*.63	*.68									
	9	.6	.48	*.63	*.67									
	10	.55	.43	*.62	*.67									
⅝	11	.55	.39	*.6	*.66									
	12	.46	.36	*.61	*.66									
	12½	.44	.34	*.60	*.65									
	13	.42	.33	*.60	*.65									
	12½	.51	.40	*.64	*.69									
	13	.50	.39	*.64	*.69	* 64	* 69	* 72						
	14	.46	.36	* 64	*.68	* 64	* 68	* 72						
¾	15	.43	.33	*.63	*.68	*.63	*.68	*.71						
	16	.40	.31	*.63	*.68	*.63	*.68	*.71						
	18	.36	.28	*.62	.62	*.62	* 67	*.71						
	19	.34	.26	* 62	.59	*.62	*.66	*.70						
	21	.32	.25	*.61	.56	*.61	*.66	*.70						
	19			*.63	.67	*.63	* 68	* 71						
	21			*.63	.64	*.63	* 67	*.71	*.63	* 67	* 71			
	22½			*.62	.57	*.62	*.67	* 70	*.62	*.67	* 70			
⅞	25			.58	.51	*.61	*.66	.68	*.61	*.67	*.70	*.61	*.66	*.73
	27½			.53	.46	*.60	*.65	.62	*.60	*.65	*.69	* 60	*.65	*.72
	27			.50	.45	*.60	*.65	.59	*.60	*.65	*.68	*.60	*.65	*.72
	30			.49	.43	*.59	.64	.57	*.59	*.65	*.68	*.59	*.65	*.72
	29					*.63	* 67	.66	*.63	*.67	*.70	*.63	*.67	*.73
	30					*.63	*.67	.64	*.63	*.67	*.71	*.63	*.67	*.74
	32½					*.62	.66	.59	*.62	*.67	*.71	*.62	*.67	*.73
1	35					* 61	.62	.55	*.61	*.66	*.70	*.61	*.66	*.73
	37½					* 61	.57	.51	*.61	*.66	.68	*.6	*.66	*.73
	37					*.61	.55	.49	*.61	*.65	.65	*.6	*.65	*.72
	40					*.60	.54	.48	*.60	*.65	.64	*.60	*.65	.72
	39					*.62	.61	.55	* 62	*.67	*.70	*.62	*.67	*.73
	40					*.62	.60	.53	*.62	*.66	*.70	*.62	*.66	*.73
1⅛	42½					*.61	.56	.50	*.61	*.66	.67	*.61	.66	*.73
	45					*.60	.53	.48	*.60	*.65	.64	*.60	*.65	.71
	47½					*.60	.50	.45	*.60	*.65	.60	*.60	*.65	.67
	49					.56	.49	.43	*.60	*.65	.58	*.60	*.65	.65
	50					.55	.48	.43	*.59	.64	.57	*.59	*.65	.64

* Plate weaker than rivets. Holes in plates countersunk.

Table 27.—Efficiency of Joints. Single Straps.

Rivet diameters, in inches.	Weights of plates, in pounds.	Alternate rivets in outer row omitted.								Wide-spaced rivets in outer row.		
		///			////			/////		///	////	/////
		Spacing of rivets in rows—rivet diameters.										
		$3\frac{1}{2}$	4	$4\frac{1}{2}$	$3\frac{1}{2}$	4	$4\frac{1}{2}$	$3\frac{1}{2}$	4	$4\frac{1}{2}$	3½ and $5\frac{1}{4}$ in outer row.	3½ and $5\frac{1}{2}$ in outer row.	4 and 6 in outer row.	3½ and $5\frac{1}{4}$ in outer row.	4½ and $6\frac{3}{4}$ in outer row.
¼	7	*.81	*.83	*.85											
	7½	*.81	*.83	*.85											
	8	*.81	*.83	*.85											
	8½	*.80	*.83	*.85											
	9	*.80	*.83	*.85											
⅜	9	*.81	*.84	*.86											
	10	*.81	*.83	*.85											
	11	*.81	*.83	*.85											
	12	*.80	*.83	*.85											
	13	*.81	*.83	.83											
½	13	*.82	*.81	*.80											
	14	*.82	*.84	*.86											
	15	*.82	*.84	.83											
	16	*.81	*.84	.78							*.75	*.75	*.78	*.75	*.81
	8	†.80	.78	.6											
	13	†.79	.71	.66											
	21	† 77	.70	.62							*.74	*.75	*.77	*.75	*.81
	19	*.82	*.84	.75							*.75	*.75	*.78	*.75	*.81
	20	†.81	.80	.71	†.81	†.83	†.85				*.75	*.75	*.78	*.75	*.81
	22½	†.78	.71	.63	†.78	†.81	.83								
⅝	25	.73	.64	.57	†.76	†.79	.81	†.76	†.79	†.81	*.74	*.74	*.77	*.74	*.80
	27	.66	.58	.52	†.74	†.75	.72	†.74	†.77	†.79					
	24						.6.0				.67				
	30	.61	.53	.47	†.72	†.75	.66	†.72	†.75	†.78	.65	*.73	*.76	*.73	*.79
	30	.68	.61	.53	†.76	†.79	.74	†.76	†.79	†.82	.73	*.75	*.78	*.75	*.81
	32½				†.75	.77	.60	†.75	†.78	†.80	.67				
¾	35				†.73	.72	.64	†.73	†.77	†.79	.63	*.74	.75	*.74	*.80
	37½				†.72	.67	.60	†.72	†.75	.77	.58		.70		
	37					.64	.57			.74	.56		.68		
	40				†.71	.63	.56	†.71	†.74	.72	.55	*.74	.66	*.74	.74
	34														
	40				†.73	.70	.62	†.73	†.76	†.79	.61	*.74	.73	*.74	*.80
	42½				†.72	.66	.58	†.72	†.75	.75	.57		.69		.78
1	45				†.7	.62	.55	†.71	†.74	.71	.54	*.74	.65	*.74	.74
	47½				.67	.59	.52	†.70	†.73	.67	.51	.70			.70
	49				.65										.68
	50				.6	.56	.50	†.69	†.72	.64	.49	.67	.58	*.72	.66

* Plate tears in outer row.
† Plate tears and rivets shear in outer row.
Holes in plates countersunk.

Table 28.—Efficiencies of Joints. Double Straps.

Rivet diameters, in inches.	Weights of plates, in pounds.	All rivet rows complete.								
		//-//		///-///		////-////			/////-/////	
		Spacing of rivets in rows—rivet diameters.								
		4	4½	4	4½	5	4	5	4	5½
⅝	15	*.73	*.76	*.73	*.76	*.78	*.73	*.78	*.73	*.80
	16	*.76	....	....	....	....	....	....	....	....
	18	....	*.76	....	....	....	....	....	....	....
	20	*.73	*.76	*.73	*.76	*.78	*.73	*.78	*.73	*.80
¾	20	*.73	*.76	*.73	*.76	*.78	*.73	*.78	*.73	*.80
	22½	....	*.76	....	....	....	....	....	....	....
	25	*.73	.72	*.73	*.76	*.78	*.73	*.78	*.73	*.80
⅞	25	*.73	*.76	*.73	*.76	*.79	*.73	*.79	*.73	*.81
	27½	....	.74	....	....	....	....	....	....	....
	30	*.73	.68	*.73	*.76	*.79	*.73	*.79	*.73	*.81
	30	*.73	*.76	*.73	*.76	*.79	*.73	*.79	*.73	*.81
	32½	....	.71	....	....	....	....	....	....	....
1	35	*.73	.66	*.73	....	*.79	*.73	*.79	*.73	*.81
	37½	.69	.61	....	....	.79	....	....	....	....
	40	.65	.57	*.73	*.76	.78	*.73	*.79	*.73	*.81
	40	.72	.64	*.74	*.77	*.79	*.74	*.79	*.74	*.81
	42½	.68	.60	....	....	*.79	....	....	....	....
1⅛	45	.64	.57	*.74	....	.77	*.74	*.79	*.74	*.81
	47½	.60	.54	....	....	.73	....	....	....	....
	50	.57	.51	*.74	*.77	.69	*.74	*.79	*.74	*.81

* Plate weaker than rivets.

No countersinking of rivet holes.

Table 29.—Efficiencies of Joints. Double Straps.

Rivet diameters, in inches.	Weights of plates, in pounds.	Alternate rivets in outer row omitted.						Wide-spaced rivets in outer row.	
		///-///		////-////		/////-/////		////-////	/////-/////
		Spacing of rivets in rows—rivet diameters.							
		4	4½	5	4½	5	5	4½ and 6¾ in outer row.	5 and 8 in outer row.
⅝	15	....	*.88	*.89	....	....	....	....	....
	16	*.86	....	*.89	....	....	....	....	....
	18	....	....	*.89	....	....	....	....	....
¾	20	*.86	*.88	.87	....	....	....	....	....
	20	....	*.88	*.89	....	....	....	....	....
	22½	*.86	....	*.89	....	....	....	....	....
⅞	25	....	*.88	.81	*.88	*.89	*.89	*.84	*.86
	25	*.87	*.88	*.89	*.88	*.89	*.89	*.84	*.87
	27½	....	*.88	.81	....	....	....	....	....
1	30	*.87	.85	.77	*.88	*.89	*.89	*.84	*.87
	30	*.87	*.88	.86	*.88	*.89	*.89	*.84	*.87
	32½	....	*.88	.80	....	....	....	....	....
	35	*.87	.82	.74	*.88	*.89	*.89	*.84	*.87
	37½	....	.77	.69	....	....	....	....	....
	40	.81	.72	.65	*.88	*.89	*.89	*.84	*.87
	40	*.87	.80	.72	*.88	*.89	*.89	*.84	*.87
1⅛	42½	....	.75	.68	....	....	....	....	....
	45	.80	.71	.64	*.88	*.89	*.89	*.84	*.87
	47½	....	.67	.60	....	.85	....	....	....
	50	.72	.64	.57	*.88	.80	*.89	*.84	*.87

* Plate tears in outer row.

No countersinking of rivet holes.

(Continued on page 400.)

Exact Spacing for Joints of Maximum Strength.

Figs. 66 and 67 contain curves of exact spacing of rivets for use in calculating joints of maximum strength.

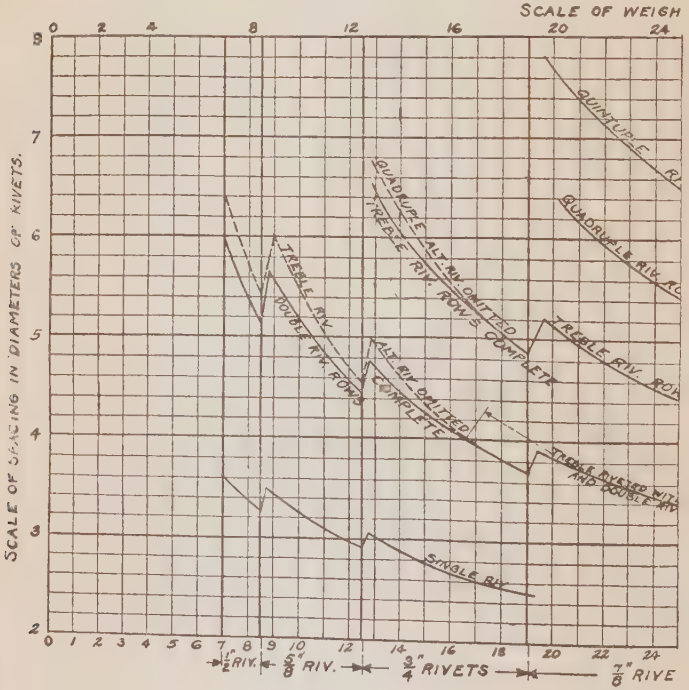

FIG. 65.

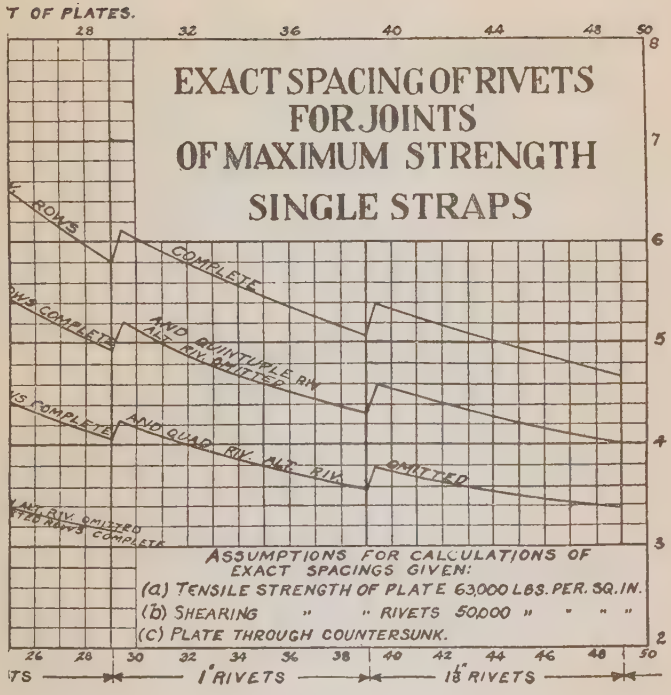
T OF PLATES.
28
32
36
40
44
48
50
EXACT SPACING OF RIVETS
FOR JOINTS
OF MAXIMUM STRENGTH
SINGLE STRAPS
ROWS
COMPLETE
AND QUINTUPLE RIV.
ALT. RIV. OMITTED
AND QUAD. RIV. ALT. RIV.
OMITTED
ASSUMPTIONS FOR CALCULATIONS OF
EXACT SPACINGS GIVEN:
(a) TENSILE STRENGTH OF PLATE 63,000 LBS. PER SQ. IN.
(b) SHEARING " " RIVETS 50,000 " " " "
(c) PLATE THROUGH COUNTERSUNK.
8
7
6
5
4
3
2
26
28
30
32
34
36
38
40
42
44
46
48
50
1" RIVETS
1⅛" RIVETS

FIG. 66.

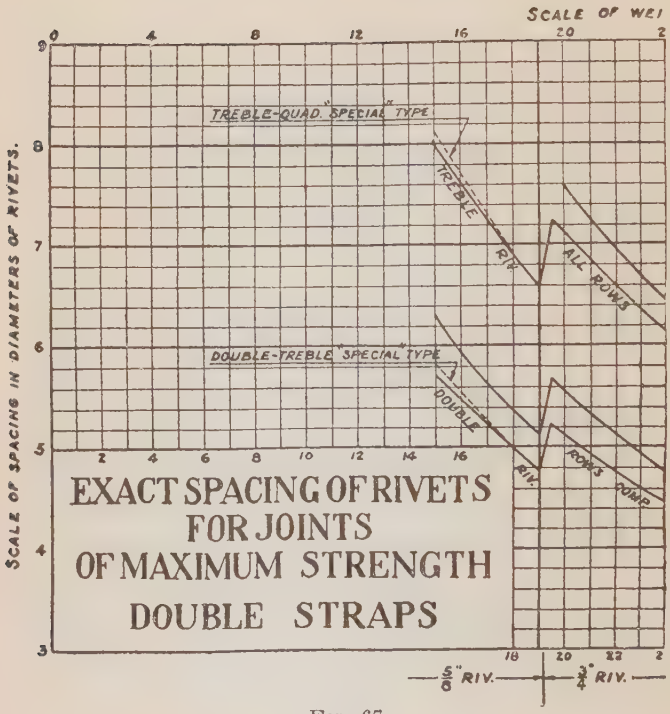
SCALE OF WEI
SCALE OF SPACING IN DIAMETERS OF RIVETS.
TREBLE-QUAD. "SPECIAL" TYPE
TREBLE RIV.
ALL ROWS
DOUBLE-TREBLE "SPECIAL" TYPE
DOUBLE RIV.
ROWS
PUMP
EXACT SPACING OF RIVETS
FOR JOINTS
OF MAXIMUM STRENGTH
DOUBLE STRAPS
5/8" RIV.
3/4" RIV.

FIG. 67.

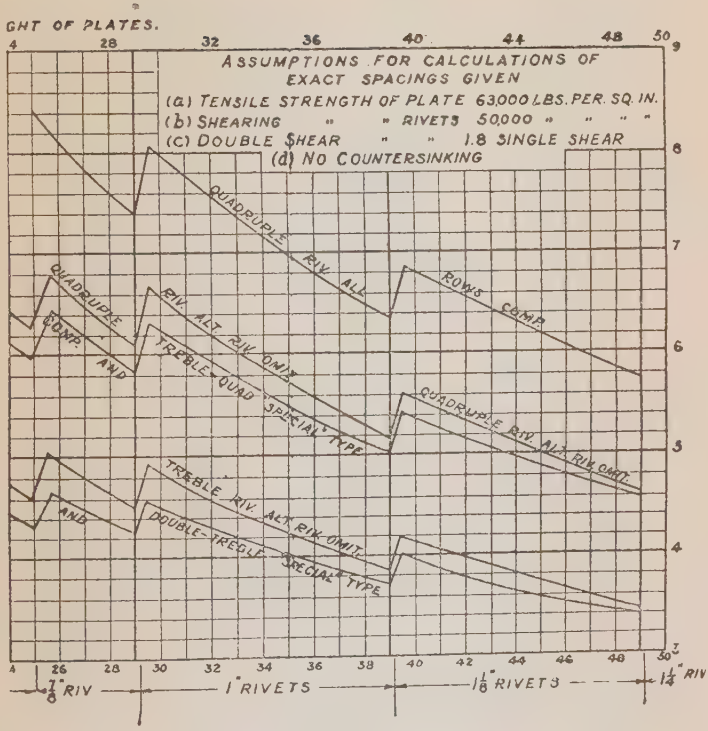
GHT OF PLATES.
4
28
32
36
40
44
48
50
ASSUMPTIONS FOR CALCULATIONS OF EXACT SPACINGS GIVEN
(a) TENSILE STRENGTH OF PLATE 63,000 LBS. PER SQ. IN.
(b) SHEARING " " RIVETS 50,000 " " " "
(c) DOUBLE SHEAR " " 1.8 SINGLE SHEAR
(d) NO COUNTERSINKING
QUADRUPLE RIV. ALT. ROWS COMP.
QUADRUPLE COMP. AND
RIV. ALT. RIV. OMIT
TREBLE QUAD SPECIAL TYPE
QUADRUPLE RIV. ALT. RIV. OMIT.
TREBLE RIV. ALT. RIV. OMIT.
AND
DOUBLE TREBLE SPECIAL TYPE
7/8" RIV
1" RIVETS
1 1/8" RIVETS
1 1/4" RIV

FIG. 68.

Table 30.—Efficiencies of Joints. Double Straps "Special."

Rivet diameters, in inches.	Weights of plates, in pounds.	//-/// Calked strap, double riveted, rows completed; noncalked strap, treble riveted, alternate rivets omitted in outer rows.			///-//// Calked strap, treble riveted, rows complete; noncalked strap quadruple riveted, alternate rivets omitted in outer row.		
		Spacing of rivets in rows—rivet diameters.					
		2½	4	4½	4	4½	5
⅝	20 ...	*.82	†.85	*.86	....	....	....
¾	22½ ...	†.85	†.86	†.88	....	....	....
	25 ...	*.83	*.85	*.87	....	....	....
⅞	25 ...	*.82	*.84	.82	*.81	*.86	*.87
	30 ...	*.84	*.86	*.88	*.86	*.88	*.87
	37½ ...	*.82	*.84	.78	*.84	*.86	*.87
1	35 ...	*.83	*.85	*.87	*.85	*.87	*.88
	40 ...	*.81	*.84	.75	*.84	*.86	*.87
	45 ...	*.80	.74	.65	*.82	*.84	*.86
	50 ...	.75	.65	.58	*.82	*.84	.75

No countersinking of rivet holes.

* Plate tears and rivets shear in outer row.

† Plate tears in outer row. No countersinking of rivet holes.

Standard Types of Rivet Heads and Points.

The sizes and proportions of standard rivets are illustrated on the following pages.

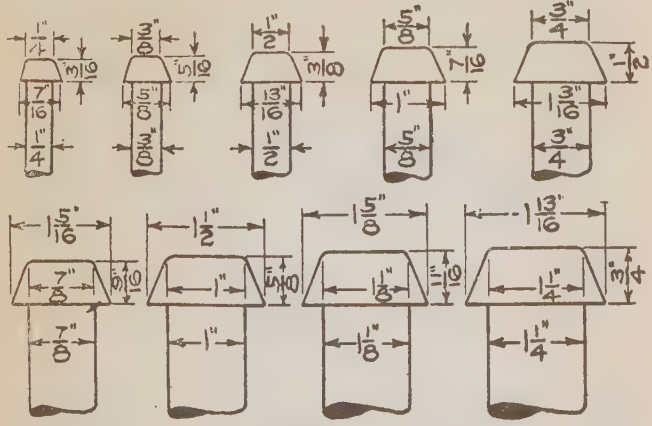

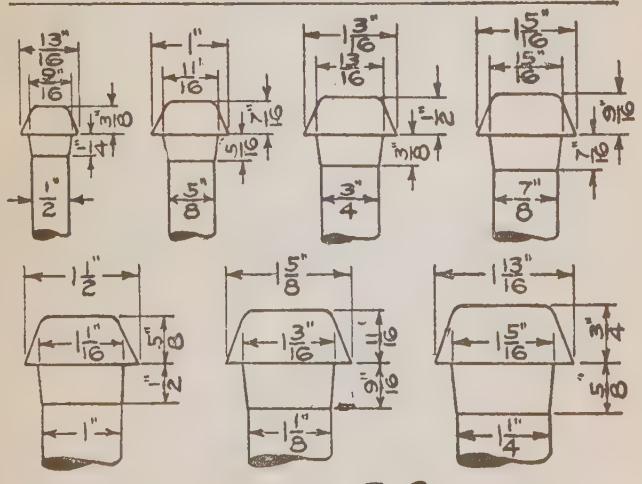

FIG. 69.—Pan Heads.

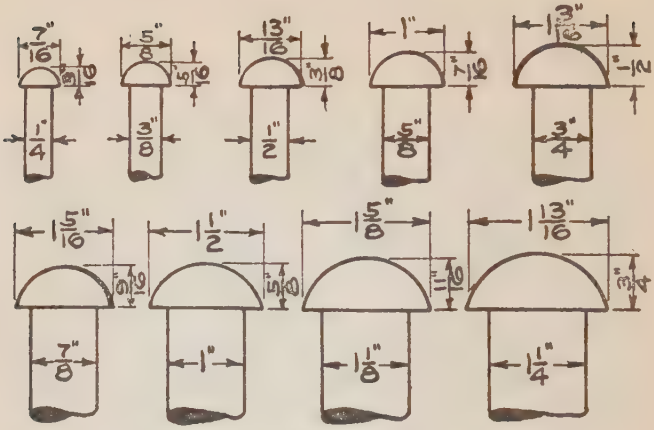

TYPE B-1.

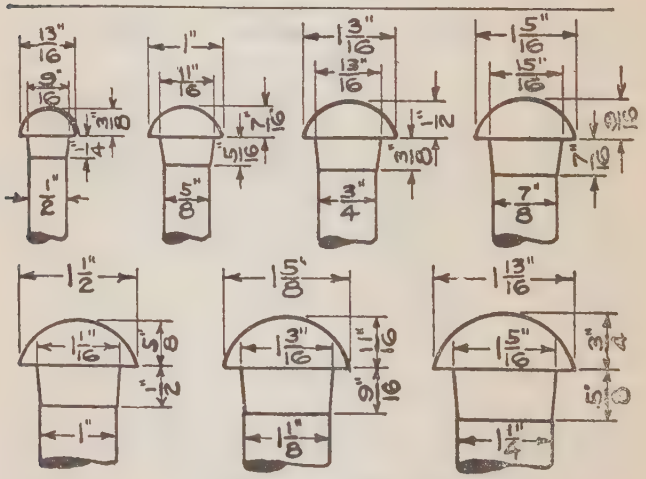

TYPE B-2

FIG. 70.—Button Heads.

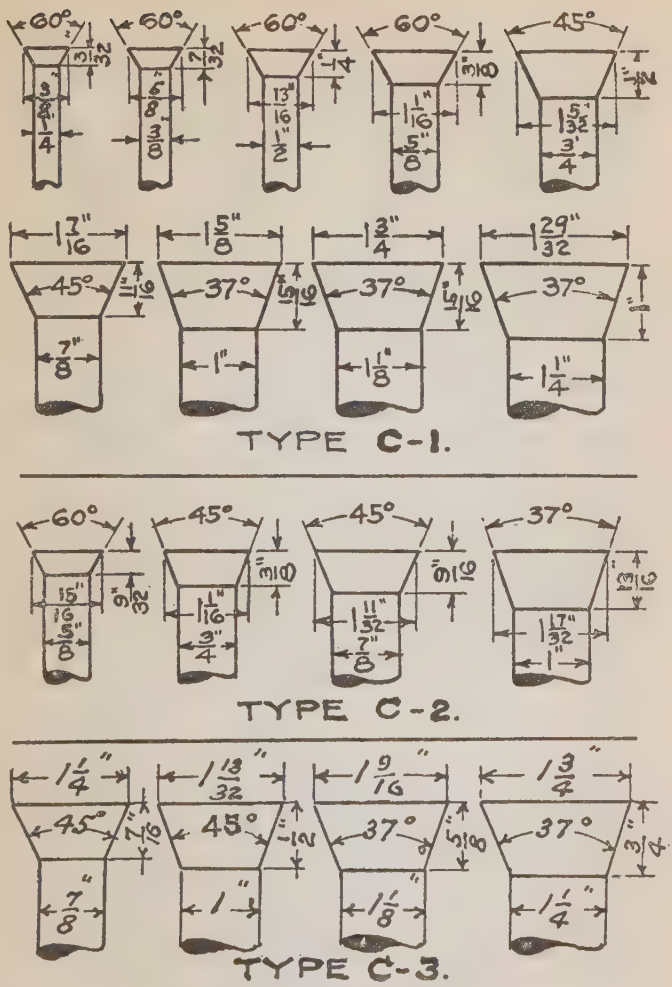

FIG. 71.—Countersunk Flat Heads.

Angles and depths given for heads are to be followed.
Diameters given for heads are approximate only.

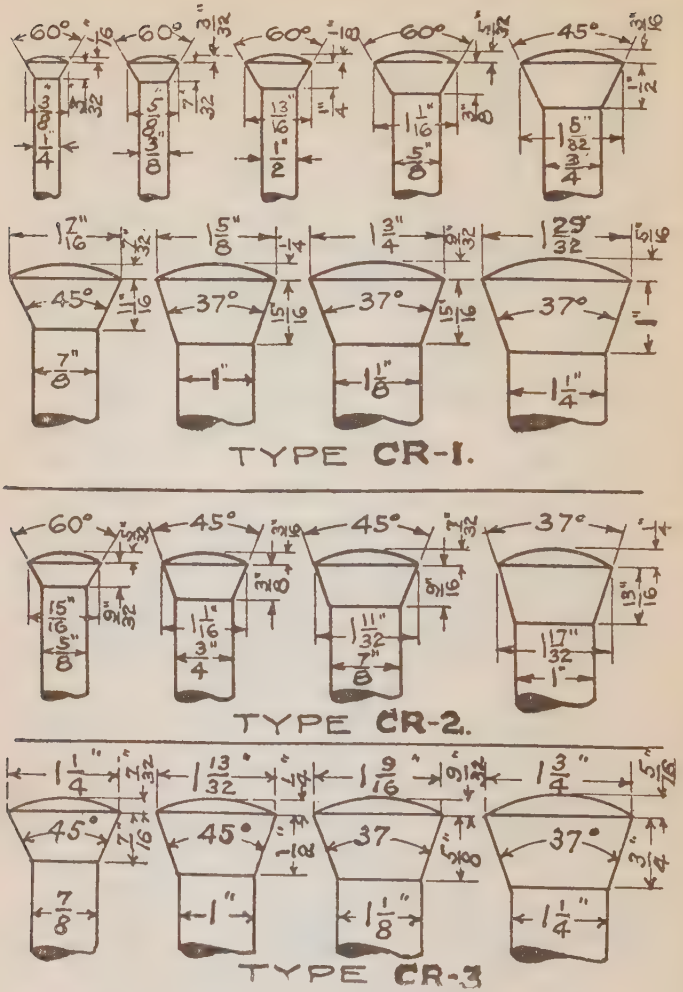

FIG. 72.—Countersunk Raised Heads.

Angles and depths given for heads are to be followed. Diameters given for heads are approximate only.

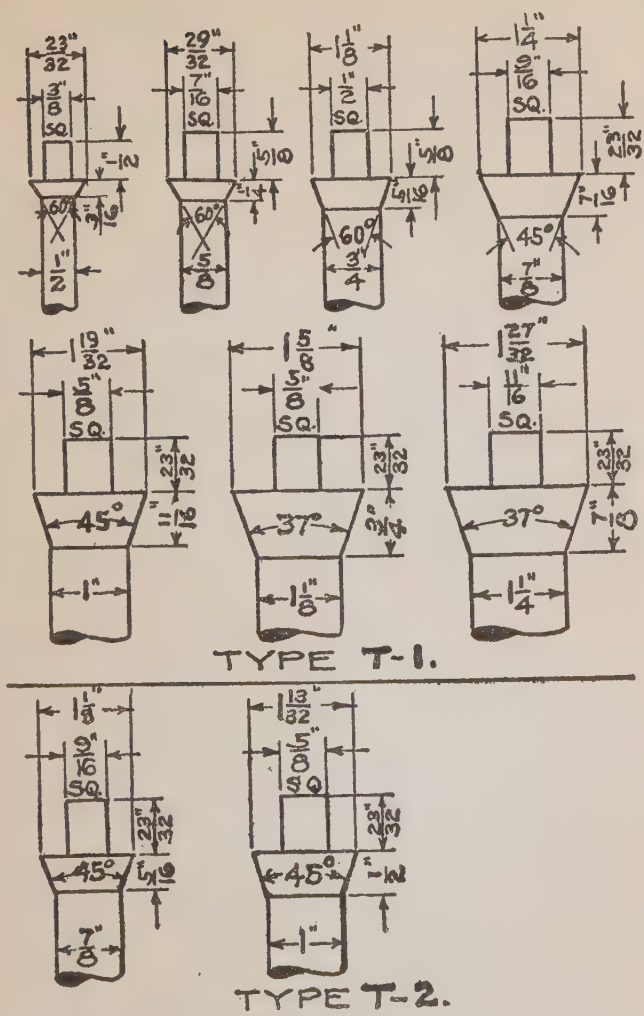

FIG. 73.—Taps.

Angles and depths given for heads are to be followed. Diameters given for heads are approximate only.

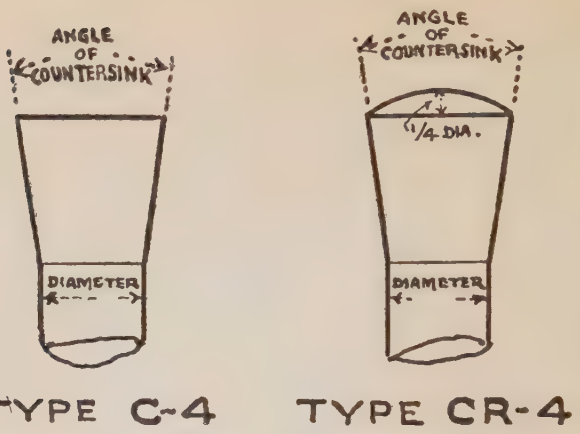

FIG. 74.—Special Heads for Rivets of Extra Length.

In these rivets the angle of countersink is intended to be about 15 degrees and the depth of head about one and one-half times the rivet diameter.

The angle of countersink and depth of head to be made as specified in the order.

Riveting—Bolting-Up for.

In connection with the following quoted requirements in preceding paragraphs, "the proportion of bolts used relative to the number of rivet holes shall be as approved. In oil-tight work, generally, one bolt should be fitted for every four rivet holes." Attention is invited to the fact that while the above quoted requirements refer to number of bolts to be used, the essential feature of the requirements is that the bolts used shall bring the plates, bars, etc.—metal-to-metal—before any rivet work is undertaken. The rivets should not in any case be used to draw the material together.

Particular attention is invited to this matter in view of the high stresses which are liable to come upon ship work and the corresponding necessity of ensuring that the riveting shall be efficient.

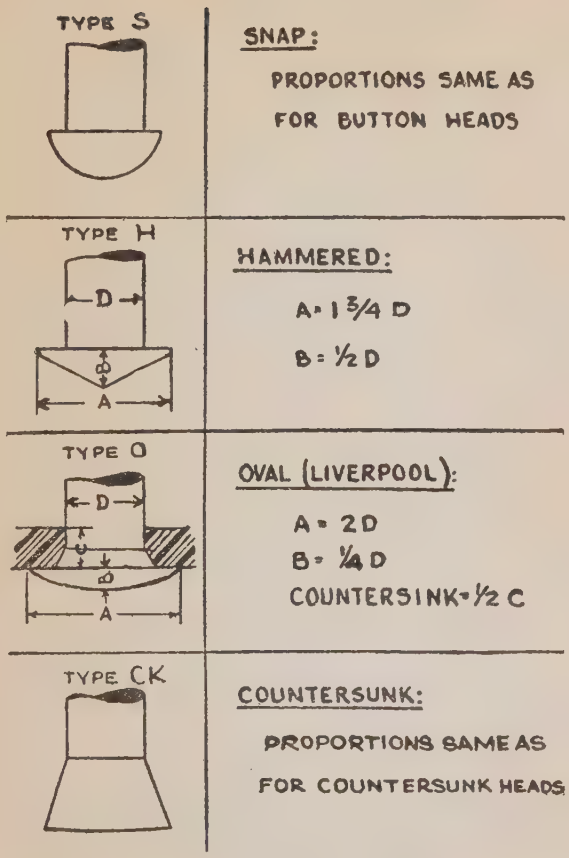

FIG. 75.—Rivet Points.

SYMBOLS FOR USE IN SCHEDULES, ETC.

Types of Rivets.

P—Panhead.
B—Button head.
C—Countersunk head, flat.
CR—Countersunk head, raised.
T—Tap.

CK—Countersunk point.
S—Snap point.
H—Hammered point.
O—Oval (Liverpool) point.

P/CK—Panhead and countersunk point.
B/S—Button head and snap point.
Etc.

H.—For high-tensile steel rivets. This symbol must precede the dimension for rivet diameter, as **H.** ¾" **P/CK**, etc.

Medium steel rivets should not have any distinguishing symbol.

/	Single riveting.	For general use.
//	Double riveting.	
///	Treble riveting.	
////	Quadruple riveting.	
/////	Quintuple riveting.	
//-//	Double-butt straps, double riveted.	
///-///	Double-butt straps, treble riveted.	
//-///	Double-butt straps "special." The calked strap double and uncalked strap treble riveted.	
///-////	Double-butt straps "special." The calked strap treble and uncalked strap quadruple riveted.	

Z. for zigzag riveting. Chain riveting should not have any distinguishing symbol.

THE FOLLOWING DATA IS FOR REFERENCE ONLY IN CONNECTION WITH THE PRECEDING SPECIFICATIONS AND DOES NOT FORM A PART THEREOF.

The widths of chain riveted lap and strap connections, in accordance with the minimum requirements of the riveting specifications, are given in Tables 31 and 32.

Table 31.—Laps and Straps. Chain Riveting.

Weights of plates, nom., in pounds.		Under 3.	From 3 to 7 incl.	Over 7 to 8½ incl.	Over 8½ to 12½ incl.	
Rivets, inches		¼	⅜	½	⅝	Widths of connections in rivet diameters.
Rivet holes, inches		9/32	7/16	9/16	11/16	
Area, holes, sq. in.		0.062	0.150	0.248	0.371	
Connections.	Rievting.	Widths of connections in inches.				
Seam laps.	/	1 3/8	1 1/2	1 5/8	2 1/16	3 1/4
	//	1 9/16	2 3/16	2 7/8	3 5/8	5 3/4
Butt laps.	//	1 9/16	2 3/8	3 1/8	3 13/16	6 1/4
	///	....	....	4 5/8	5 13/16	9 1/4
Seam and butt straps, single.	/	1 5/8	2 7/16	3 1/4	4 1/16	6 1/2
	//	2 5/8	4 5/16	5 3/4	7 3/16	11 1/2
	///	....	....	8 1/4	10 5/16	16 1/2

Table 32.—Laps and Straps. Chain Riveting.

Weights of plates, nom., in pounds.		Over 12½ to 19 incl.	Over 19 to 29 incl.	Over 29 to 39 incl.	Over 39 to 49 incl.	Over 49.	Widths of connections in rivet diameters.
Rivets, inches		¾	⅞	1	1⅛	1¼	
Rivet holes, inches		13/16	15/16	1 1/16	1 3/16	1 5/16	
Area, holes, sq. in.		0.518	0.690	0.887	1.107	1.353	
Connections.	**Riveting.**	**Widths of connections in inches.**					
Seam laps.	/	2 7/16	2⅝	3¼	3 11/16	4 1/16	3¼
	//	4 5/16	5 1/16	5⅜	6½	7 3/16	5⅜
	///	6 3/16	7¼	8¼	9 5/16	10 5/16	8¼
Butt laps.	//	4 11/16	5¼	6¼	7 1/16	7 13/16	6¼
	///	6 13/16	8⅛	9¼	10 7/16	11 9/16	9¼
	////	9 3/16	10¾	12¼	13 13/16	15 5/16	12¼
Seam and butt straps, single.	/	4 7/8	5 11/16	6½	7 5/16	8⅛	6½
	//	8⅝	10 1/16	11½	12 15/16	14⅜	11½
	///	12⅜	14 7/16	16½	18 9/16	20⅝	16½
	////	16⅛	18 13/16	21½	24 3/16	26⅞	21½
	/////	19⅞	23 5/16	26½	29 13/16	33⅛	26½

The widths of zigzag riveted lap and strap connections, in accordance with the minimum requirements of the riveting specifications, are given in Tables 33 and 34.

Table 33.—Laps and Straps. Zigzag Riveting.

Weights of plates, nominal, in pounds.		Under 3	From 3 to 7 incl.	Over 7 to 8½ incl.	Widths of connections in rivet diameters.
Rivets, inches		½	⅝	¾	
Rivet holes, inches		⅝	⅞	1	
Area, holes, square inches		0.162	0.150	0.248	
Connections.	Spacing in each row.	Width of connections in inches.			
Seam laps //	3½ rivet diameters	1 3/16	1 13/16	2 3/8	4¾
	4 rivet diameters	1½	1 7/8	2½	5
	4½ rivet diameters	1 15/32	1 15/16	2 9/16	5⅛
Single straps //	3½ rivet diameters	2⅜	3 9/16	4¾	9½
	4 rivet diameters	2½	3¾	5	10
	4½ rivet diameters	2 9/16	3⅞	5⅛	10¼

Table 34.—Laps and Straps. Zigzag Riveting.

Weights of plates, nominal, in pounds.		Over 8½ to 12½ incl.	Over 12½ to 19 incl.	Over 19 to 29 incl.	Widths of connections in rivet diameters.
Rivets, inches		⅞	1	1⅛	
Rivet holes, inches		1 1/16	1 1/8	1 3/16	
Area, holes, square inches		0.371	0.518	0.690	
Connections.	Spacing in each row.	Width of connections in inches.			
Seam laps //	3½ rivet diameters	3	3 9/16	4 3/16	4¾
	4 rivet diameters	3½	3¾	4⅜	5
	4½ rivet diameters	3¼	3⅞	4½	5⅛
Single straps //	3½ rivet diameters	5 5/16	7 1/16	8 5/16	9½
	4 rivet diameters	6¼	7⅛	8¾	10
	4½ rivet diameters	6 7/16	7 11/16	9	10¼

The widths of chain-riveted double-butt straps, in accordance with the minimum requirements of the riveting specifications, are given in Table 35.

Table 35.—Double-Butt Straps. Chain Riveting.

Weights of plates, nominal, in pounds.	Over 12½ to 19 incl.	Over 19 to 25 incl.	Over 25 to 29 incl.	Over 29 to 39 incl.	Over 39 to 49 incl.	Over 49.	Widths of straps in rivet diameters.
Rivets, inches	$\frac{5}{8}$	$\frac{3}{4}$	$\frac{7}{8}$	1	$1\frac{1}{8}$	$1\frac{1}{4}$	
Holes, inches	$\frac{11}{16}$	$\frac{13}{16}$	$\frac{15}{16}$	$1\frac{1}{16}$	$1\frac{3}{16}$	$1\frac{5}{16}$	
Area, holes, square inches.	0.371	0.518	0.690	0.887	1.107	1.353	
Riveting.	Widths of straps, in inches.						
//-//	$7\frac{13}{16}$	$9\frac{3}{8}$	$10\frac{15}{16}$	$12\frac{1}{2}$	$14\frac{1}{16}$	$15\frac{5}{8}$	$12\frac{1}{2}$
///-///	$11\frac{9}{16}$	$13\frac{7}{8}$	$16\frac{3}{16}$	$18\frac{1}{2}$	$20\frac{13}{16}$	$23\frac{1}{8}$	$18\frac{1}{2}$
////-////	$15\frac{5}{16}$	$18\frac{3}{8}$	$21\frac{7}{16}$	$24\frac{1}{2}$	$27\frac{9}{16}$	$30\frac{5}{8}$	$24\frac{1}{2}$

Tables 36 gives transverse locations for rivets in flanges of single riveted shapes.

Table 36.—Gage Table for Shapes. Single Riveting.

Diameter of rivets.	Width of flange: sums of dimensions A, B, and C.	A. Thickness of flange.	B. Distance from inside of vertical flange.	C. Distance from edge of shape.	Minimum distance from edge of unplaned shape, $1\frac{1}{8}$ diameters of rivet.
			To center of rivets.		
Inches.					
$\frac{1}{4}$	1	$\frac{1}{8}$	$\frac{7}{16}$	$\frac{7}{16}$	$\frac{7}{16}$
	$1\frac{1}{4}$	$\frac{5}{16}$	$\frac{9}{16}$	$\frac{9}{16}$	
$\frac{3}{8}$	$1\frac{1}{2}$	$\frac{3}{16}$	$\frac{5}{8}$	$\frac{5}{8}$	$\frac{5}{8}$
	$1\frac{3}{4}$	$\frac{3}{16}$	$\frac{13}{16}$	$\frac{13}{16}$	
$\frac{1}{2}$	2	$\frac{3}{16}$	$\frac{15}{16}$	$\frac{7}{8}$	$\frac{13}{16}$
	$2\frac{1}{4}$	$\frac{3}{16}$	$1\frac{1}{16}$	1	
$\frac{5}{8}$	$2\frac{1}{2}$	$\frac{1}{4}$	$1\frac{1}{8}$	$1\frac{1}{8}$	1
	3	$\frac{5}{16}$	$1\frac{5}{16}$	$1\frac{1}{8}$	
	3	$\frac{5}{16}$	$1\frac{5}{16}$	$1\frac{1}{8}$	
$\frac{3}{4}$	$3\frac{1}{2}$	$\frac{5}{16}$	$1\frac{5}{16}$	$1\frac{1}{8}$	$1\frac{1}{4}$
	4	$\frac{3}{8}$	$1\frac{3}{4}$	$1\frac{7}{16}$	
$\frac{7}{8}$	$3\frac{1}{2}$	$\frac{3}{8}$	$1\frac{9}{16}$	$1\frac{9}{16}$	$1\frac{7}{16}$
	4	$\frac{3}{8}$	$1\frac{3}{4}$	$1\frac{7}{16}$	
1	4	$\frac{7}{16}$	$1\frac{3}{4}$	$1\frac{3}{8}$	$1\frac{3}{8}$
$1\frac{1}{8}$	5	$\frac{3}{8}$	$2\frac{1}{8}$	$2\frac{1}{8}$	$1\frac{3}{8}$
$1\frac{1}{4}$	5	$\frac{7}{16}$	$2\frac{3}{8}$	$2\frac{3}{16}$	$2\frac{1}{16}$

Table 37 gives transverse spacings for rivets in shapes, with the corresponding net widths of flanges, for the longitudinal spacings of rivets and thicknesses of bars noted.

Table 37.—Gage Table for Shapes, Zigzag Riveting.

Diameter of rivets.	Spacing of rivets.		A.	B.	C.	D.	Minimum width of unplaned flange required: sum of dimensions A, B, C, and D.
	In rows.	Between rows.	Thickness of flange.	Distance from inside of vertical flange to first row.	Between rows.	Distance from second row to edge, at $1\frac{5}{8}$ diameters.	
				To center of rivet.			
Inches.	Rivet diameters.		Inches.				
$\frac{3}{8}$	4	$1\frac{3}{4}$	$\frac{1}{4}$	$\frac{3}{4}$	$1\frac{1}{16}$	$\frac{5}{8}$	$2\frac{5}{16}$
	$4\frac{1}{2}$	$1\frac{7}{8}$			$1\frac{1}{16}$		$2\frac{5}{8}$
	$5\frac{1}{2}$	2			$\frac{3}{4}$		$2\frac{7}{8}$
$\frac{1}{2}$	4	$1\frac{3}{4}$	$\frac{5}{16}$	$\frac{7}{8}$	$\frac{7}{8}$	$1\frac{3}{16}$	$2\frac{7}{8}$
	$4\frac{1}{2}$	$1\frac{7}{8}$			$1\frac{1}{16}$		$2\frac{15}{16}$
	$5\frac{1}{2}$	2			1		3
$\frac{5}{8}$	4	$1\frac{3}{4}$	$\frac{5}{16}$	1	$1\frac{1}{8}$	1	$3\frac{7}{16}$
	$4\frac{1}{2}$	$1\frac{7}{8}$			$1\frac{5}{16}$		$3\frac{1}{2}$
	$5\frac{1}{2}$	2			$1\frac{1}{4}$		$3\frac{9}{16}$
$\frac{3}{4}$	4	$1\frac{3}{4}$	$\frac{5}{16}$	$1\frac{1}{8}$	$1\frac{5}{16}$	$1\frac{1}{4}$	4
	$4\frac{1}{2}$	$1\frac{7}{8}$			$1\frac{7}{16}$		$4\frac{1}{8}$
	$5\frac{1}{2}$	2			$1\frac{3}{8}$		$4\frac{3}{16}$
$\frac{7}{8}$	4	$1\frac{3}{4}$	$\frac{3}{8}$	$1\frac{5}{16}$	$1\frac{9}{16}$	$1\frac{7}{16}$	$4\frac{11}{16}$
	$4\frac{1}{2}$	$1\frac{7}{8}$			$1\frac{5}{8}$		$4\frac{3}{4}$
	$5\frac{1}{2}$	2			$1\frac{1}{4}$		$4\frac{7}{8}$
1	4	$1\frac{3}{4}$	$\frac{1}{2}$	$1\frac{1}{2}$	$1\frac{3}{4}$	$1\frac{5}{8}$	$5\frac{3}{8}$
	$4\frac{1}{2}$	$1\frac{7}{8}$			$1\frac{7}{8}$		$5\frac{1}{2}$
	$5\frac{1}{2}$	2			2		$5\frac{5}{8}$
$1\frac{1}{8}$	4	$1\frac{3}{4}$	$\frac{1}{2}$	$1\frac{5}{8}$	2	$1\frac{13}{16}$	$5\frac{15}{16}$
	$4\frac{1}{2}$	$1\frac{7}{8}$			$2\frac{1}{16}$		$6\frac{1}{16}$
	$5\frac{1}{2}$	2			$2\frac{1}{4}$		$6\frac{3}{16}$
$1\frac{1}{4}$	4	$1\frac{3}{4}$	$\frac{5}{8}$	$1\frac{3}{4}$	$2\frac{3}{16}$	$2\frac{1}{16}$	$6\frac{5}{8}$
	$4\frac{1}{2}$	$1\frac{7}{8}$			$2\frac{5}{16}$		$6\frac{13}{16}$
	$5\frac{1}{2}$	2			$2\frac{1}{2}$		$6\frac{15}{16}$

Distance "B," in table, for $\frac{3}{8}$-inch rivets is taken as two diameters, for $\frac{3}{4}$- to 1-inch rivets, inclusive, as one and one-half diameters, and for $1\frac{1}{4}$-inch rivets as one and four-tenths diameters. For other rivets the distances are graduated between those mentioned.

LENGTHS OF RIVETS FOR ORDERING.

The length for ordering pan- and button-head rivets is measured exclusive of the head; for countersunk rivets and taps the ordered length includes the head to the top of the countersunk.

Table 38.—Allowance for Points in Length of Rivets, with Two Thicknesses Connected.

Type of point.	Diameter of rivets (inches).					
	½	⅝	¾	⅞	1	1⅛
Countersunk	½	⅝	¾	⅞	1	1⅛
Hammered	½	⅝	¾	⅞	1⅛	1⅛
Snap	⅞	1	1⅛	1¼	1⅜	1½
Oval	⅞	⅞	..	..	..	..

For each additional thickness ⅛ inch should be added.

Allowances given are based upon the average practice at various navy yards and private ship yards. Where sufficient data at a particular yard is available, such data should be used in preference to that contained in Table 38.

Table 39.—For Obtaining Weight in Pounds of 100 Rivets.

To obtain the weight of 100 rivets of any size or type given in the specifications: Multiply the ordered length as defined in Table 38, expressed in eighths of an inch, by the weights given in column W. Add to this the weight as given in columns P. 1 to CR. 3, according to the type of rivet considered. In the case of tap rivets the same procedure is to be followed, using column X for length weights and columns T. 1, or T. 2, as applicable.

Diameter of rivet.	Weight to be added to cylindrical part of 100 rivets.										Weight per 100 rivets for $\frac{1}{8}$ in. of ordered length.	Weight to be added to cylindrical part of 100 rivets.*		Weight per 100 tap rivets for $\frac{1}{8}$ in. of ordered length.	Diameter of rivet.
	Type of rivet.											Type of rivet.			
Inches.	P. 1.	P. 2.	B. 1.	B. 2.	C. 1.	C. 2.	C. 3.	CR. 1.	CR. 2.	CR. 3.	W.	T. 1.	T. 2.	X.	Inches.
$\frac{1}{4}$	0.51	....	0.50	....	0.076	....	....	0.100	....	....	0.174				$\frac{1}{4}$
$\frac{5}{16}$	1.55	....	1.55	....	.558	....	....	.7.3	....	....	.391				$\frac{5}{16}$
$\frac{3}{8}$	3.66	3.75	3.54	3.63	1.05	....	....	2.18	....	....	.696	2.70	....	0.571	$\frac{3}{8}$
$\frac{7}{16}$	6.55	6.84	6.12	6.41	2.82	1.43	....	5.37	3.22	....	1.087	4.89	....	.902	$\frac{7}{16}$
$\frac{1}{2}$	10.62	11.03	9.71	10.12	4.01	2.23	....	7.51	4.96	....	1.566	7.33	....	1.32	$\frac{1}{2}$
$\frac{9}{16}$	15.19	15.74	13.43	13.99	9.15	6.06	3.65	15.95	11.53	8.03	2.131	11.23	....	1.81	$\frac{9}{16}$
$\frac{5}{8}$	22.03	22.76	19.29	20.00	15.77	11.32	5.14	26.07	19.78	11.49	2.784	21.14	9.92	2.37	$\frac{5}{8}$
$\frac{3}{4}$	29.27	30.19	25.04	25.95	17.40	....	7.74	30.04	....	16.60	3.523	21.94	15.21	2.99	$\frac{3}{4}$
$\frac{7}{8}$	39.60	40.73	33.70	34.82	21.46	....	11.83	38.77	....	24.33	4.350	30 53	....	3.76	$\frac{7}{8}$

*In obtaining weights allowances have been made for material cut out by threads.

The weights are calculated using 0.28356 pounds per cubic inch and were checked in certain cases with the actual weights of rivets and found to reasonably agree.

The values in the columns, exclusive of W. and X., are the weights of that part of the head, neck and stud on taps, of the various types of rivets which is outside or above the cylindrical part. The cylindrical part is assumed to extend the full ordered length, as defined in Table 39.

Example: To find weight of 100, $\frac{7}{8}$-inch, pan-head rivets, 2 inches long, coned under head:

Length as per rule $2'' = 16$ eighths.	Pounds.
Weight of cylindrical part as per column W.=	
2.131×16	34.096
Weight to be added from Column P. 2	15.74
The required weight is	49.836

Example: To find the weight of 100, 1-inch tap rivets, type T. 1, $2\frac{1}{2}$ inches long:

Length as per rule $2\frac{1}{2}'' = 20$ eighths.	Pounds.
Weight of cylindrical threaded part as per column X.	47.40
Weight to be added from column T. 1	21.14
The required weight is	68.54

The values of rivet diameters reduced to inches are given in Table 40.

Table 40.

Number of diameters.	Diameter of rivets (inches)								
	¼	⅜	½	⅝	¾	⅞	1	1⅛	1¼
1½	⅜	2/16	¾	15/16	1 1/8	1 5/16	1½	1 1/16	1 7/16
1⅝	3/8	2/16	13/16	1	1 1/4	1 7/16	1⅝	1 1/8	2 5/16
1¾	7/16	3/16	7/8	1 1/16	1 3/8	1 9/16	1¾	2	2 3/16
1⅞	½	3/16	15/16	1 1/16	1 3/8	1 9/16	1⅞	2 1/8	2 3/8
2	½	¼	1	1 1/8	1½	1¾	2	2 1/8	2 1/4
2¼	9/16	¼	1 1/16	1 1/8	1 5/8	1 13/16	2¼	2 3/16	2 7/16
2½	5/8	5/16	1 1/8	1 1/4	1 5/8	1 13/16	2½	2 5/16	2 7/16
2¾	11/16	5/16	1 1/8	1 1/4	1 7/8	2 1/16	2¾	2 5/16	2 1/2
3	¾	3/8	1 1/8	1 5/16	2	2 1/16	3	3 1/8	3 1/4
3¼	13/16	3/8	1 1/4	1 5/16	2 1/8	2 3/16	3¼	3 1/8	3 7/16
3½	⅞	7/16	1 1/4	1 3/8	2 1/8	2 3/16	3½	3 1/4	3 7/16
3¾	15/16	7/16	1 3/8	1 3/8	2 1/4	2 5/16	3¾	3 3/8	3 1/2
4	1	½	1 3/8	1 7/16	2 1/4	2 5/16	4	4 1/8	4 7/16
4½	1 1/16	½	1 1/2	1 7/16	2 3/8	2 7/16	4½	4 3/8	4 5/8
4½	1 1/8	½	1 5/8	1 9/16	2 3/8	2 7/16	4½	4 3/8	4 5/8
4¾	1 1/16	9/16	1 5/8	1 9/16	2 3/8	2 7/16	4¾	4 3/8	4 5/8
5	1 1/4	5/8	1 5/8	1 11/16	2 1/2	2 9/16	5	4 7/8	5 1/16
5¼	1 5/16	5/8	1 3/4	1 11/16	2 5/8	2 11/16	5¼	5 1/8	5 5/16
5½	1 3/8	11/16	1 3/4	1 13/16	2 5/8	2 11/16	5½	5 1/8	5 5/16
5¾	1 7/16	11/16	1 7/8	1 13/16	2 3/4	2 13/16	5¾	5 3/8	5 9/16
6	1½	¾	2	1 15/16	2 3/4	2 13/16	6	5 5/8	5 13/16
6½	1 5/8	¾	2 1/8	2 1/16	2 7/8	2 15/16	6½	6 1/8	6 5/16
6½	1 5/8	13/16	2 1/8	2 1/16	2 7/8	2 15/16	6½	6 1/8	6 5/16
6¾	1 11/16	13/16	2 1/8	2 1/16	2 7/8	2 15/16	6¾	6 3/8	6 9/16
7	1¾	7/8	2 1/8	2 3/16	2 7/8	2 15/16	7	6 5/8	6 13/16
7¼	1 13/16	7/8	2 1/4	2 3/16	2 7/8	2 15/16	7¼	6 5/8	6 13/16
7½	1 7/8	15/16	2 1/4	2 3/16	2 7/8	2 15/16	7½	6 5/8	6 13/16
7¾	1 15/16	15/16	2 1/4	2 3/16	2 7/8	2 15/16	7¾	6 5/8	6 13/16
8	2	1	2 1/4	2 3/16	2 7/8	2 15/16	8	6 5/8	6 13/16
8¼	2 1/16	1 1/16	2 1/4	2 3/16	2 7/8	2 15/16	8¼	6 5/8	6 13/16
8½	2 1/8	1 1/16	2 1/4	2 3/16	2 7/8	2 15/16	8½	6 5/8	6 13/16
8¾	2 3/16	1 1/16	2 1/4	2 3/16	2 7/8	2 15/16	8¾	6 5/8	6 13/16
9	2 1/4	1 1/8	2 1/4	2 3/16	2 7/8	2 15/16	9	6 5/8	6 13/16
9¼	2 5/16	1 1/8	2 1/4	2 3/16	2 7/8	2 15/16	9¼	6 5/8	6 13/16
9½	2 3/8	1 3/16	2 1/4	2 3/16	2 7/8	2 15/16	9½	6 5/8	6 13/16
9¾	2 7/16	1 3/16	2 1/4	2 3/16	2 7/8	2 15/16	9¾	6 5/8	6 13/16
10	2½	1 1/4	2 1/4	2 3/16	2 7/8	2 15/16	10	6 5/8	6 13/16
10½	2 5/8	1 5/16	2 1/4	2 3/16	2 7/8	2 15/16	10½	6 5/8	6 13/16
10½	2 5/8	1 5/16	2 1/4	2 3/16	2 7/8	2 15/16	10½	6 5/8	6 13/16
10¾	2 11/16	1 5/16	2 1/4	2 3/16	2 7/8	2 15/16	10¾	6 5/8	6 13/16
11	2¾	1 3/8	2 1/4	2 3/16	2 7/8	2 15/16	11	6 5/8	6 13/16
11½	2 13/16	1 3/8	2 1/4	2 3/16	2 7/8	2 15/16	11½	6 5/8	6 13/16
11½	2 7/8	1 7/16	2 1/4	2 3/16	2 7/8	2 15/16	11½	6 5/8	6 13/16
11¾	2 15/16	1 7/16	2 1/4	2 3/16	2 7/8	2 15/16	11¾	6 5/8	6 13/16
12	3	1½	2 1/4	2 3/16	2 7/8	2 15/16	12	6 5/8	6 13/16
12½	3 1/16	1 9/16	2 1/4	2 3/16	2 7/8	2 15/16	12½	6 5/8	6 13/16
12½	3 1/8	1 9/16	2 1/4	2 3/16	2 7/8	2 15/16	12½	6 5/8	6 13/16

Table 41.—Spacing.

Distance Between End Rivets, Number of Rivets and Spacing in Inches and in Diameters.

Number of rivets, including the end rivets.			Distance between end rivets in inches.										Diameter of rivet in inches.
			1	2	3	4	5	6	7	8	9	10	
	Spacing of rivets.	In.	½	1	1½	2	2½	3	3½	4	4½	5	
3		Diameters.	....	....	3.0	4.0	5.0	6.0	7.0	8.0	9.0	....	½
			....	....	....	3.2	4.0	4.8	5.5	6.4	7.2	8.0	⅝
			....	....	....	....	3.3	4.0	4.7	5.3	6.0	6.7	¾
			....	....	....	....	....	3.4	4.0	4.6	5.1	5.7	⅞
			....	....	....	....	....	3.0	3.5	4.0	4.5	5.0	1
			....	....	....	....	....	....	3.1	3.6	4.0	4.4	1⅛
	Spacing of rivets.	In.	1/32	2/32	1	1 1/32	1 2/32	2	2 1/32	2 2/32	3	3 1/32	
4		Diameters.	....	....	....	....	3.3	4.0	4.7	5.3	6.0	6.7	½
			....	....	....	....	....	3.2	3.8	4.3	4.8	5.4	⅝
			....	....	....	....	....	....	3.1	3.5	4.0	4.5	¾
			.4	.8	1.1	1.5	1.9	2.3	2.7	3.0	3.4	3.8	⅞
			.3	.7	1.0	1.3	1.7	2.0	2.3	2.7	3.0	3.3	1
			.3	.6	.9	1.2	1.5	1.8	2.1	2.4	2.7	3.0	1⅛
	Spacing of rivets.	In.	¼	½	¾	1	1¼	1½	1¾	2	2¼	2½	
5		Diameters.	....	....	....	....	....	3.0	3.5	4.0	4.5	5.0	½
			....	....	....	....	....	....	....	3.2	3.6	4.0	⅝
			.3	.7	1.0	1.3	1.7	2.0	2.3	2.7	3.0	3.3	¾
			.3	.6	.9	1.1	1.4	1.7	2.0	2.3	2.5	2.8	⅞
			.3	.5	.8	1.0	1.3	1.5	1.8	2.0	2.3	2.5	1
			.2	.4	.7	.9	1.1	1.3	1.6	1.8	2.0	2.2	1⅛

Table 41.—Spacing.—Continued.

Distance Between End Rivets, Number of Rivets and Spacing in Inches and in Diameters.

Number of rivets, including the end rivets.			Distance between end rivets in inches.									Diameter of rivet in inches
			20	30	40	50	60	70	80	90	100	
	Spacing of rivets.	In.	10	15	20	25	30	35	40	45	50	
3	Diameters.		....	....	....	....	....	....	....	....	....	½
			....	....	....	....	....	....	....	....	....	⅝
			....	....	....	....	....	....	....	....	....	¾
			....	....	....	....	....	....	....	....	....	⅞
			10.0	....	....	....	....	....	....	....	....	1
			8.0	....	....	....	....	....	....	....	....	1⅛
4	Spacing of rivets.	In.	6 21/32	10	13 11/32	16 21/32	20	23 11/32	26 21/32	30	33 11/32	
	Diameters.		....	....	....	....	....	....	....	....	....	½
			....	....	....	....	....	....	....	....	....	⅝
			8.9	....	....	....	....	....	....	....	....	¾
			7.6	11.4	....	....	....	....	....	....	....	⅞
			6.7	10.0	....	....	....	....	....	....	....	1
			5.9	8.9	....	....	....	....	....	....	....	1⅛
5	Spacing of rivets.	In.	5	7½	10	12½	15	17½	20	22	25	
	Diameters.		10.0	....	....	....	....	....	....	....	....	½
			8.0	12.0	....	....	....	....	....	....	....	⅝
			6.7	10.0	....	....	....	....	....	....	....	¾
			5.7	8.6	....	....	....	....	....	....	....	⅞
			5.0	7.5	10.0	....	....	....	....	....	....	1
			4.4	6.7	8.9	....	....	....	....	....	....	1⅛

Table 41.—Spacing.—Continued.

Distance Between End Rivets, Number of Rivets and Spacing in Inches and in Diameters.

Number of rivets, including the end rivets.			Distance between end rivets in inches.										Diameter of rivet in inches.
			1	2	3	4	5	6	7	8	9	10	
	Spacing of rivets.	In.	5/16	13/32	15/32	13/16	1	1 3/16	1 13/32	1 15/32	1 13/16	2	
6		Diameters.	....	....	....	....	....	....	....	3.2	3.6	4.0	1/2
			.3	.7	.9	1.3	1.6	1.9	2.3	2.6	2.9	3.2	5/8
			.3	.5	.8	1.1	1.3	1.6	1.9	2.1	2.4	2.7	3/4
			.2	.5	.7	.9	1.1	1.4	1.6	1.8	2.1	2.3	7/8
			.2	.4	.6	.8	1.0	1.2	1.4	1.6	1.8	2.0	1
			.2	.4	.5	.7	.9	1.1	1.3	1.4	1.6	1.8	1 1/8
	Spacing of rivets.	In.	5/32	11/32	1/2	21/32	27/32	1	1 5/32	1 11/32	1 1/2	1 31/32	
7		Diameters.	.3	.7	1.0	1.3	1.7	2.0	2.3	2.7	3.0	3.3	1/2
			.3	.6	.8	1.1	1.4	1.6	1.9	2.2	2.4	2.7	5/8
			.2	.5	.7	.9	1.1	1.3	1.5	1.8	2.0	2.2	3/4
			.2	.4	.6	.8	1.0	1.1	1.3	1.5	1.7	1.9	7/8
			.2	.3	.5	.6	.8	1.0	1.2	1.3	1.5	1.6	1
			.1	.3	.4	.6	.8	.9	1.0	1.2	1.3	1.5	1 1/8
	Spacing of rivets.	In.	3/32	9/32	7/16	9/16	23/32	27/32	1	1 5/32	1 9/32	1 7/16	
8		Diameters.	.3	.6	.9	1.1	1.4	1.7	2.0	2.3	2.6	2.9	1/2
			.3	.5	.7	.9	1.2	1.4	1.6	1.9	2.1	2.3	5/8
			.2	.4	.6	.8	1.0	1.1	1.3	1.5	1.7	1.9	3/4
			.2	.3	.5	.6	.8	1.0	1.1	1.3	1.5	1.6	7/8
			.2	.3	.4	.6	.7	.8	1.0	1.2	1.3	1.4	1
			.1	.3	.4	.5	.6	.8	.9	1.0	1.1	1.3	1 1/8

Table 41.—Spacing.—Continued.

Distance Between End Rivets, Number of Rivets and Spacing in Inches and in Diameters.

Number of rivets, including the end rivets.			Distance between end rivets in inches.									Diameter of rivet in inches.
			20	30	40	50	60	70	80	90	100	
	Spacing of rivets.	In.	4	6	8	10	12	14	16	18	20	
6		Diameters.	8.0	12.0	....	....	....	....	....	....	....	$\frac{1}{2}$
			6.4	9.6	....	....	....	....	....	....	....	$\frac{5}{8}$
			5.3	8.0	10.7	....	....	....	....	....	....	$\frac{3}{4}$
			4.6	6.9	9.1	....	....	....	....	....	....	$\frac{7}{8}$
			4.0	6.0	8.0	10.0	....	....	....	....	....	1
			3.6	5.3	7.1	8.9	....	....	....	....	....	$1\frac{1}{8}$
	Spacing of rivets.	In.	$3\frac{11}{32}$	5	$6\frac{21}{32}$	$8\frac{11}{32}$	10	$11\frac{21}{32}$	$13\frac{11}{32}$	15	$16\frac{21}{32}$	
7		Diameters.	6.7	10.0	....	....	....	....	....	....	....	$\frac{1}{2}$
			5.4	8.0	10.7	....	....	....	....	....	....	$\frac{5}{8}$
			4.5	6.7	8.9	....	....	....	....	....	....	$\frac{3}{4}$
			3.8	5.7	7.6	9.5	....	....	....	....	....	$\frac{7}{8}$
			3.3	5.0	6.7	8.3	....	....	....	....	....	1
			3.0	4.4	5.9	7.4	8.9	....	....	....	....	$1\frac{1}{8}$
	Spacing of rivets.	In.	$2\frac{27}{32}$	$4\frac{9}{32}$	$5\frac{23}{32}$	$7\frac{5}{32}$	$8\frac{9}{16}$	10	$11\frac{7}{16}$	$12\frac{27}{32}$	$14\frac{9}{32}$	
8		Diameters.	5.7	8.6	....	....	....	....	....	....	....	$\frac{1}{2}$
			4.6	6.9	9.2	....	....	....	....	....	....	$\frac{5}{8}$
			3.8	5.7	7.6	9.5	....	....	....	....	....	$\frac{3}{4}$
			3.3	4.9	6.5	8.2	....	....	....	....	....	$\frac{7}{8}$
			2.8	4.3	5.7	7.2	8.6	....	....	....	....	1
			2.5	3.8	5.1	6.4	7.6	8.9	....	....	....	$1\frac{1}{8}$

Table 41.—Spacing.—Continued.

Distance Between End Rivets, Number of Rivets and Spacing in Inches and in Diameters.

Number of rivets, including the end rivets.		Distance between end rivets in inches.										Diameter of rivet in inches.
		1	2	3	4	5	6	7	8	9	10	
	In.	$\frac{1}{8}$	$\frac{1}{4}$	$\frac{3}{8}$	$\frac{1}{2}$	$\frac{5}{8}$	$\frac{3}{4}$	$\frac{7}{8}$	1	$1\frac{1}{8}$	$1\frac{1}{4}$	
9	Diameters.	.3	.5	.8	1.0	1.3	1.5	1.8	2.0	2.3	2.5	$\frac{1}{2}$
		.2	.4	.6	.8	1.0	1.2	1.4	1.6	1.8	2.0	$\frac{5}{8}$
		.2	.3	.5	.7	.8	1.0	1.2	1.3	1.5	1.7	$\frac{3}{4}$
		.1	.3	.4	.6	.7	.9	1.0	1.1	1.3	1.4	$\frac{7}{8}$
		.1	.3	.4	.5	.6	.8	.9	1.0	1.1	1.3	1
		.1	.2	.3	.4	.6	.7	.8	.9	1.0	1.1	$1\frac{1}{8}$
	In.	$\frac{1}{6}$	$\frac{7}{32}$	$\frac{11}{32}$	$\frac{7}{16}$	$\frac{9}{16}$	$\frac{21}{32}$	$\frac{25}{32}$	$\frac{7}{8}$	1	$1\frac{1}{8}$	
10	Diameters.	.3	.4	.7	.9	1.1	1.3	1.6	1.8	2.0	2.3	$\frac{1}{2}$
		.2	.4	.6	.7	.9	1.1	1.3	1.4	1.6	1.8	$\frac{5}{8}$
		.2	.3	.5	.6	.8	.9	1.0	1.2	1.3	1.5	$\frac{3}{4}$
		.1	.3	.4	.5	.6	.8	.9	1.0	1.1	1.3	$\frac{7}{8}$
		.1	.2	.3	.4	.6	.7	.8	.9	1.0	1.2	1
		.1	.2	.3	.4	.5	.6	.7	.8	.9	1.0	$1\frac{1}{8}$
	In.	$\frac{3}{32}$	$\frac{13}{64}$	$\frac{19}{64}$	$\frac{13}{32}$	$\frac{1}{2}$	$\frac{19}{32}$	$\frac{45}{64}$	$\frac{51}{64}$	$\frac{33}{32}$	1	
11	Diameters.	.20	.40	.60	.80	1.00	1.20	1.40	1.60	1.80	2.00	$\frac{1}{2}$
		.16	.32	.48	.64	.80	.96	1.12	1.28	1.44	1.60	$\frac{5}{8}$
		.13	.27	.40	.53	.67	.80	.93	1.07	1.20	1.33	$\frac{3}{4}$
		.11	.23	.34	.46	.57	.69	.80	.91	1.03	1.14	$\frac{7}{8}$
		.10	.20	.30	.40	.50	.60	.70	.80	.90	1.00	1
		.0	.18	.27	.36	.44	.53	.62	.71	.80	.89	$1\frac{1}{8}$

Table 41.—Spacing.—Continued.

Distance Between End Rivets, Number of Rivets and Spacing in Inches and in Diameters.

Number of rivets, including the end rivets.			Distance between end rivets in inches.									Diameter of rivet in inches.
			20	30	40	50	60	70	80	90	100	
	Spacing of rivets.	In.	$2\frac{1}{2}$	$3\frac{3}{4}$	5	$6\frac{1}{4}$	$7\frac{1}{2}$	$8\frac{3}{4}$	10	$11\frac{1}{4}$	$12\frac{1}{2}$	
9		Diameters.	5.0	7.5	10.0	....	....	....	....	..	....	$\frac{1}{2}$
			4.0	6.0	8.0	10.0	....	....	....	....	....	$\frac{5}{8}$
			3.3	5.0	6.7	8.3	....	....	....	....	....	$\frac{3}{4}$
			2.9	4.3	5.7	7.1	8.6	....	....	....	....	$\frac{7}{8}$
			2.5	3.8	5.0	6.3	7.5	8.8	....	....	....	1
			2.2	3.3	4.4	5.6	6.7	7.8	8.9	....	....	$1\frac{1}{8}$
	Spacing of rivets.	In.	$2\frac{7}{32}$	$3\frac{11}{32}$	$4\frac{7}{16}$	$5\frac{9}{16}$	$6\frac{21}{32}$	$7\frac{25}{32}$	$8\frac{7}{8}$	10	$11\frac{1}{8}$	
10		Diameters.	4.4	6.7	8.9	....	....	....	....	....	....	$\frac{1}{2}$
			3.6	5.4	7.1	8.9	....	....	....	....	....	$\frac{5}{8}$
			3.0	4.5	5.9	7.4	8.9	....	....	....	....	$\frac{3}{4}$
			2.5	3.8	5.1	6.4	7.6	8.9	....	....	....	$\frac{7}{8}$
			2.2	3.3	4.4	5.6	6.7	7.8	8.9	....	....	1
			2.0	3.0	3.9	4.9	5.9	6.9	7.9	8.9	....	$1\frac{1}{8}$
	Spacing of rivets.	In.	2	3	4	5	6	7	8	9	10	
11		Diameters.	4.0	6.0	8.0	10.0	....	....	....	....	....	$\frac{1}{2}$
			3.2	4.8	6.4	8.0	9.6	....	....	....	....	$\frac{5}{8}$
			2.7	4.0	5.3	6.7	8.0	9.3	....	....	....	$\frac{3}{4}$
			2.3	3.4	4.6	5.7	6.9	8.0	9.1	....	....	$\frac{7}{8}$
			2.0	3.0	4.0	5.0	6.0	7.0	8.0	9.0	....	1
			1.8	2.7	3.6	4.4	5.3	6.2	7.1	8.0	....	$1\frac{1}{8}$

Table 41.—Spacing.—Continued.

Distance Between End Rivets, Number of Rivets and Spacing in Inches and in Diameters.

Number of rivets, including the end rivets.			Distance between end rivets in inches.										Diameter of rivet in inches.
			1	2	3	4	5	6	7	8	9	10	
	Spacing of rivets.	In.	3/32	3/16	17/64	23/64	29/64	35/64	41/64	47/64	13/16	29/32	
		Diameters.	.18	.36	.54	.72	.91	1.09	1.27	1.46	1.64	1.82	1/2
			.15	.29	.44	.58	.73	.88	1.02	1.17	1.31	1.46	5/8
12			.12	.24	.36	.48	.60	.73	.85	.97	1.09	1.21	3/4
			.10	.21	.31	.41	.52	.62	.73	.83	.94	1.04	7/8
			.09	.18	.27	.36	.45	.55	.64	.73	.82	.91	1
			.08	.16	.24	.32	.40	.49	.57	.65	.73	.81	1 1/8
	Spacing of rivets.	In.	5/64	11/64	1/4	21/64	27/64	1/2	37/64	43/64	3/4	53/64	
		Diameters.	.17	.33	.50	.67	.83	1.00	1.17	1.33	1.50	1.67	1/2
			.14	.27	.40	.54	.67	.80	.94	1.07	1.20	1.34	5/8
13			.11	.22	.33	.45	.56	.67	.78	.89	1.00	1.11	3/4
			.09	.19	.29	.38	.47	.57	.67	.76	.86	.95	7/8
			.08	.16	.25	.34	.42	.50	.58	.66	.75	.83	1
			.07	.15	.22	.30	.37	.44	.52	.59	.67	.74	1 1/8
	Spacing of rivets.	In.	5/64	5/32	15/64	5/16	25/64	15/32	17/32	33/64	11/16	53/64	
		Diameters.	.16	.31	.46	.61	.77	.93	1.08	1.23	1.39	1.54	1/2
			.13	.25	.37	.49	.62	.74	.86	.99	1.11	1.23	5/8
14			.10	.20	.30	.41	.51	.62	.72	.82	.93	1.03	3/4
			.09	.17	.26	.35	.44	.53	.61	.70	.79	.88	7/8
			.08	.15	.23	.31	.38	.46	.54	.62	.69	.77	1
			.07	.14	.21	.27	.34	.41	.48	.55	.62	.68	1 1/8

Table 41.—Spacing.—Continued.

Distance Between End Rivets, Number of Rivets and Spacing in Inches and in Diameters.

Number of rivets, including the end rivets.			Distance between end rivets in inches.									Diameter of rivet in inches.
			20	30	40	50	60	70	89	90	100	
	Spacing of rivets.	In.	$1\frac{13}{16}$	$2\frac{23}{32}$	$3\frac{5}{8}$	$4\frac{17}{32}$	$5\frac{1}{2}$	$6\frac{3}{8}$	$7\frac{9}{32}$	$8\frac{5}{16}$	$9\frac{3}{32}$	
12		Diameters.	3.6	5.4	7.3	9.1	....	....	....	....	....	$\frac{1}{2}$
			2.9	4.4	5.8	7.8	8.8	....	....	....	....	$\frac{5}{8}$
			2.4	3.6	4.8	6.0	7.3	8.5	....	....	....	$\frac{3}{4}$
			2.1	3.1	4.1	5.2	6.3	7.3	8.3	....	....	$\frac{7}{8}$
			1.8	2.7	3.6	4.5	5.5	6.4	7.3	8.2	....	1
			1.6	2.4	3.2	4.0	4.9	5.7	6.5	7.3	8.1	$1\frac{1}{8}$
	Spacing of rivets.	In.	$1\frac{21}{32}$	$2\frac{1}{2}$	$3\frac{5}{16}$	$4\frac{5}{32}$	5	$5\frac{27}{32}$	$6\frac{21}{32}$	$7\frac{1}{2}$	$8\frac{11}{32}$	
13		Diameters.	3.3	5.0	6.6	8.3	....	....	....	....	....	$\frac{1}{2}$
			2.7	4.0	5.3	6.7	8.0	9.4	....	....	....	$\frac{5}{8}$
			2.2	3.3	4.4	5.5	6.7	7.8	8.9	....	....	$\frac{3}{4}$
			1.9	2.9	3.8	4.8	5.7	6.7	7.6	8.6	....	$\frac{7}{8}$
			1.7	2.5	3.3	4.2	5.0	5.8	6.7	7.5	8.3	1
			1.5	2.2	2.9	3.7	4.4	5.2	5.9	6.7	7.4	$1\frac{1}{8}$
	Spacing of rivets.	In.	$1\frac{17}{32}$	$2\frac{5}{16}$	$3\frac{1}{16}$	$3\frac{27}{32}$	$4\frac{5}{8}$	$5\frac{3}{8}$	$6\frac{5}{32}$	$6\frac{15}{16}$	$7\frac{11}{16}$	
14		Diameters.	3.0	4.6	6.1	7.7	9.3	....	....	....	....	$\frac{1}{2}$
			2.5	3.7	4.9	6.2	7.4	8.6	....	....	....	$\frac{5}{8}$
			2.0	3.1	4.1	5.1	6.2	7.2	8.2	....	....	$\frac{3}{4}$
			1.8	2.6	3.5	4.4	5.3	6.1	7.0	7.9	8.8	$\frac{7}{8}$
			1.5	2.3	3.1	3.8	4.6	5.4	6.2	6.9	7.7	1
			1.4	2.1	2.7	3.4	4.1	4.8	5.5	6.2	6.8	$1\frac{1}{8}$

Table 41.—Spacing.—Continued.

Distance Between End Rivets, Number of Rivets and Spacing in Inches and in Diameters.

Number of rivets, including the end rivets.			Distance between end rivets in inches.										Diameter of rivet in inches.
			1	2	3	4	5	6	7	8	9	10	
	Spacing of rivets.	In.	5/64	9/64	7/32	9/32	23/64	27/64	1/2	37/64	41/64	23/32	
15		Diameters.	.14	.29	.43	.57	.71	.86	1.00	1.14	1.29	1.43	1/2
			.12	.23	.34	.46	.57	.69	.80	.92	1.03	1.15	5/8
			.10	.19	.28	.38	.48	.57	.67	.76	.86	.95	3/4
			.08	.16	.24	.32	.41	.49	.57	.65	.74	.82	7/8
			.07	.14	.21	.28	.36	.43	.50	.57	.64	.72	1
			.06	.13	.19	.25	.32	.38	.44	.51	.57	.64	1 1/8
	Spacing of rivets.	In.	1/16	9/64	13/64	17/64	21/64	13/32	15/32	17/32	19/32	43/64	
16		Diameters.	.13	.27	.40	.53	.67	.80	.93	1.07	1.20	1.33	1/2
			.11	.22	.32	.43	.53	.64	.75	.86	.96	1.07	5/8
			.09	.18	.27	.35	.45	.53	.62	.71	.80	.89	3/4
			.08	.15	.23	.30	.38	.46	.53	.61	.69	.76	7/8
			.07	.13	.20	.27	.33	.40	.47	.53	.60	.67	1
			.06	.12	.18	.24	.30	.36	.41	.48	.53	.59	1 1/8
	Spacing of rivets.	In.	1/16	1/8	3/16	1/4	5/16	3/8	7/16	1/2	9/16	5/8	
17		Diameters.	.13	.25	.38	.50	.63	.75	.88	1.00	1.13	1.25	1/2
			.10	.20	.30	.40	.50	.60	.70	.80	.90	1.00	5/8
			.08	.17	.25	.33	.42	.50	.58	.67	.75	.83	3/4
			.07	.14	.21	.29	.36	.43	.50	.57	.64	.71	7/8
			.06	.13	.19	.25	.31	.38	.44	.50	.56	.63	1
			.05	.11	.17	.22	.28	.33	.39	.44	.50	.56	1 1/8

Table 41.—Spacing.—Continued.

Distance Between End Rivets, Number of Rivets and Spacing in Inches and in Diameters.

Number of rivets, including the end rivets.			Distance between end rivets in inches.									Diameter of rivet in inches.
			20	30	40	50	60	70	80	90	100	
15	Spacing of rivets.	In.	1 7/16	2 5/32	2 27/32	3 9/16	4 5/32	5	5 23/32	6 7/16	7 5/32	
	Diameters.		2.9	4.3	5.7	7.1	8.6	....	....	....	....	1/2
			2.3	3.5	4.6	5.7	6.9	8.0	9.2	....	...	5/8
			1.9	2.9	3.8	4.8	5.7	6.7	7.6	8.6	....	3/4
			1.6	2.5	3.3	4.1	4.9	5.7	6.5	7.4	8.2	7/8
			1.4	2.2	2.8	3.6	4.3	5.0	5.7	6.4	7.2	1
			1.3	1.9	2.5	3.2	3.8	4.4	5.1	5.7	6.4	1 1/8
16	Spacing of rivets.	In.	1 1/32	2	2 31/32	3 1/32	4	4 31/32	5 1/32	6	6 31/32	
	Diameters.		2.7	4.0	5.3	6.7	8.0	9.3	....	....	....	1/2
			2.2	3.2	4.3	5.3	6.4	7.5	8.6	....	....	5/8
			1.8	2.7	3.5	4.5	5.3	6.2	7.1	8.0	8.9	3/4
			1.5	2.3	3.0	3.8	4.6	5.3	6.1	6.9	7.6	7/8
			1.3	2.0	2.7	3.3	4.0	4.7	5.3	6.0	6.7	1
			1.2	1.8	2.4	3.0	3.6	4.1	4.7	5.3	5.9	1 1/8
17	Spacing of rivets.	In.	1 1/4	1	2 1/4	3 1/8	3 3/4	4 3/8	5	5 5/8	6 1/4	
	Diameters.		2.5	3.8	5.0	6.2	7.5	8.7	....	....	....	1/2
			2.0	3.0	4.0	5.0	6.0	7.0	8.0	9.0	....	5/8
			1.7	2.5	3.3	4.2	5.0	5.8	6.7	7.5	8.3	3/4
			1.4	2.1	2.9	3.6	4.3	5.0	5.7	6.4	7.1	7/8
			1.3	1.9	2.5	3.1	3.8	4.4	5.0	5.6	6.3	1
			1.1	1.7	2.2	2.8	3.3	3.9	4.4	5.0	5.6	1 1/8

Table 41.—Spacing.—Continued.

Distance Between End Rivets, Number of Rivets and Spacing in Inches and in Diameters.

Number of rivets, including the end rivets.			Distance between end rivets in inches.										Diameter of rivet in inches.
			1	2	3	4	5	6	7	8	9	10	
18	Spacing of rivets.	In.	1/16	1/8	11/64	15/64	19/64	27/64	13/32	15/32	17/32	19/32	
		Diameters.	.12	.24	.35	.47	.59	.71	.83	.94	1.06	1.18	1/2
			.10	.19	.28	.38	.47	.57	.66	.76	.85	.94	5/8
			.08	.16	.23	.31	.39	.47	.55	.63	.70	.78	3/4
			.07	.14	.20	.27	.34	.40	.47	.54	.60	.67	7/8
			.06	.12	.18	.24	.30	.35	.41	.47	.53	.59	1
			.05	.11	.16	.21	.26	.31	.37	.42	.47	.52	1 1/8
19	Spacing of rivets.	In.	1/16	3/64	11/64	7/32	9/32	21/64	23/64	7/16	1/2	9/16	
		Diameters.	.12	.23	.33	.44	.56	.67	.78	.89	1.00	1.11	1/2
			.09	.18	.27	.36	.45	.54	.62	.71	.80	.89	5/8
			.08	.15	.22	.30	.37	.45	.52	.59	.67	.74	3/4
			.07	.13	.19	.25	.32	.38	.44	.51	.57	.64	7/8
			.06	.11	.17	.22	.28	.33	.39	.44	.50	.56	
			.05	.10	.15	.20	.25	.30	.34	.39	.44	.49	1 1/8
20	Spacing of rivets.	In.	5/64	7/64	9/32	13/64	17/64	5/16	3/8	27/64	15/32	17/32	
		Diameters.	.10	.21	.32	.42	.53	.63	.74	.84	.95	1.05	1/2
			.08	.17	.26	.34	.42	.51	.59	.68	.76	.84	5/8
			.07	.14	.21	.28	.35	.42	.49	.56	.63	.70	3/4
			.06	.12	.16	.24	.30	.36	.42	.48	.54	.60	7/8
			.05	.11	.15	.21	.27	.32	.37	.42	.48	.53	1
			.04	.09	.14	.19	.23	.28	.33	.38	.42	.47	1 1/8

Table 41.—Spacing.—Continued.

Distance Between End Rivets, Number of Rivets and Spacing in Inches and in Diameters.

Number of rivets, including the end rivets.			Distance between end rivets in inches.									Diameter of rivet in inches.
			20	30	40	50	60	70	80	90	100	
	Spacing of rivets.	In.	$1\frac{6}{32}$	$1\frac{3}{4}$	$2\frac{11}{32}$	$2\frac{15}{16}$	$3\frac{17}{32}$	$4\frac{1}{8}$	$4\frac{23}{32}$	$5\frac{9}{32}$	$5\frac{7}{8}$	
18		Diameters.	2.3	3.5	4.7	4.9	7.1	8.3	....	....	....	$\frac{1}{2}$
			1.9	2.8	3.8	4.7	5.7	6.6	7.6	8.5	....	$\frac{5}{8}$
			1.5	2.3	3.1	3.9	4.7	5.5	6.3	7.0	7.8	$\frac{3}{4}$
			1.3	2.0	2.7	3.4	4.0	4.7	5.4	6.0	6.7	$\frac{7}{8}$
			1.2	1.8	2.3	2.9	3.5	4.1	4.7	5.3	5.9	1
			1.0	1.6	2.1	2.6	3.1	3.7	4.2	4.7	5.2	$1\frac{1}{8}$
	Spacing of rivets.	In.	$1\frac{1}{8}$	$1\frac{31}{32}$	$2\frac{7}{32}$	$2\frac{25}{32}$	$3\frac{11}{32}$	$3\frac{7}{8}$	$4\frac{7}{16}$	5	$5\frac{9}{16}$	
19		Diameters.	2.2	3.3	4.4	5.5	6.7	7.7	8.9	....	....	$\frac{1}{2}$
			1.8	2.7	3.6	4.5	5.4	6.2	7.1	8.0	8.9	$\frac{5}{8}$
			1.5	2.2	3.0	3.7	4.5	5.2	5.9	6.7	7.4	$\frac{3}{4}$
			1.3	1.9	2.5	3.2	3.8	4.4	5.1	5.7	6.4	$\frac{7}{8}$
			1.1	1.7	2.2	2.8	3.3	3.9	4.4	5.0	5.6	1
			1.0	1.5	2.0	2.5	3.0	3.4	3.9	4.4	4.9	$1\frac{1}{8}$
	Spacing of rivets.	In.	$1\frac{1}{16}$	$1\frac{19}{32}$	$2\frac{3}{32}$	$2\frac{5}{8}$	$3\frac{5}{32}$	$3\frac{1}{16}$	$4\frac{7}{32}$	$4\frac{3}{4}$	$5\frac{1}{4}$	
20		Diameters.	2.1	3.2	4.2	5.2	6.3	7.4	8.4	....	....	$\frac{1}{2}$
			1.7	2.6	3.4	4.2	5.1	5.9	6.8	7.6	8.4	$\frac{5}{8}$
			1.4	2.1	2.8	3.5	4.2	4.9	5.6	6.3	7.0	$\frac{3}{4}$
			1.2	1.8	2.4	3.0	3.6	4.2	4.8	5.4	6.0	$\frac{7}{8}$
			1.1	1.6	2.1	2.6	3.2	3.7	4.2	4.8	5.3	1
			.9	1.4	1.9	2.3	2.8	3.3	3.8	4.2	4.7	$1\frac{1}{8}$

All riveting should be executed in a careful and workmanlike manner, special care being taken that the holes come fair, and that the rivets fit accurately, and are properly heated for driving, but not burned. Rivets less than $\frac{3}{8}$ inch diameter may be driven cold. As a general rule, countersunk heads will be used only where required for mechanical or other special reasons. Where practicable the pan-head rivet will be used, with countersunk points where flush work is required.

Special care should be taken, in riveting, that rivets used are of sufficient length to insure a proper point, the aim being to have the rivet a trifle long, if anything.

Table 42 will be a sufficient guide for ordinary repair work done aboard ship.

Table 42.

Wt. per sq. ft. of plate.	Thickness of plate.	Diameter of rivet.	Spacing water-tight work.	Spacing non-water-tight work.
Sq. ft.	*In.*	*In.*		
Up to $2\frac{1}{2}$ inclusive.	Up to $\frac{1}{8}$	$\frac{1}{2}$	$3\frac{1}{2}$ to $4\frac{1}{2}$ times diameter of rivet for all sizes.	7 to 8 times diameter of rivet for all sizes.
$2\frac{1}{2}$ to 5	$\frac{1}{8}$ to $\frac{1}{4}$	$\frac{5}{8}$		
5 to $7\frac{1}{2}$	$\frac{1}{4}$ to $\frac{3}{16}$	$\frac{3}{4}$		
$7\frac{1}{2}$ to $12\frac{1}{2}$	$\frac{3}{16}$ to $\frac{5}{16}$	$\frac{7}{8}$		
$12\frac{1}{2}$ to 20	$\frac{5}{16}$ to $\frac{1}{2}$	1		
20 to 30	$\frac{1}{2}$ to $\frac{3}{4}$	$1\frac{1}{4}$		
30 to 40	$\frac{3}{4}$ to 1	$1\frac{1}{2}$		

SHAPES OF MATERIAL USED IN SHIPBUILDING.

Shipbuilding shapes ordinarily used in U. S. service, for hull structures, are as follows:

Plates are gaged by pounds per square foot: a steel plate 1 foot square and 1 inch thick weighs 40.8 pounds, but is usually called a 40-pound plate: a steel plate 1 foot square weighing 40 pounds is nominally 1 inch thick: therefore half-inch plates are called 20-pound and quarter-inch 10-pound plates, etc. This refers to flat plates for shell plating, decks, etc.

Universal plates are flat plates of standard sizes over 6 inches wide, or rather plates of the various commercial sizes.

There are other plates of various shapes, used for special purposes, such as checkered plates, used for floor plates in engine rooms and fire rooms, chafing plates under anchor chain, where the chain runs over a wood deck, and such other places as may require a steel surface on which the feet are not so likely to slip, the top side of the plate being checkered for this purpose. Corrugated plates (not to be confused with corrugated sheet iron or steel which are corrugated to stiffen the plate), a corrugated plate has only one corrugation running lengthwise the plate with a projected plane, extending on each side of the corrugation, through which the plate is riveted in place, these plates are used for fenders on the sides of a vessel like a coal barge, or in any place where a permanent, projecting fender is required.

Flats are flat plates of various sizes up to 6 inches wide inclusive, and are used for seam straps, liners, tieplates, margin pieces, etc., and in places where narrow widths of plate are required; some flats are made with round edges for finish, and are called round-edge flats.

Rounds are round bars and rods up to 7 inches in diameter, and are used for solid stanchions, rungs in iron bulkhead ladders, tierods, etc.

Pipe, for structural work, is made in three grades or weights: Standard weight, extra strong and double extra strong; the standard weight is the ordinary pipe used for fresh-water systems, etc., with screwed fittings for working pressures of 150 pounds and less; for structural purposes, it is used for berth and canopy frames, railings, bag racks, etc. Extra strong is suitable for deck, awning and rail stanchions. Double extra strong is suitable for deck stanchions where extra strength is required.

(No. 1.) *Angles* are used for connections of plates to plates when meeting at an angle, as of bulkheads to decks, etc.

(No. 2.) *Z-bars* are used for frames outside of inner bottom, bulkhead stiffeners, etc.

(No. 3.) *Tee-bars* are used for deck seam straps, mast seam straps, etc.

(No. 4.) *I-bars* are used for bulkhead stiffeners and special fittings.

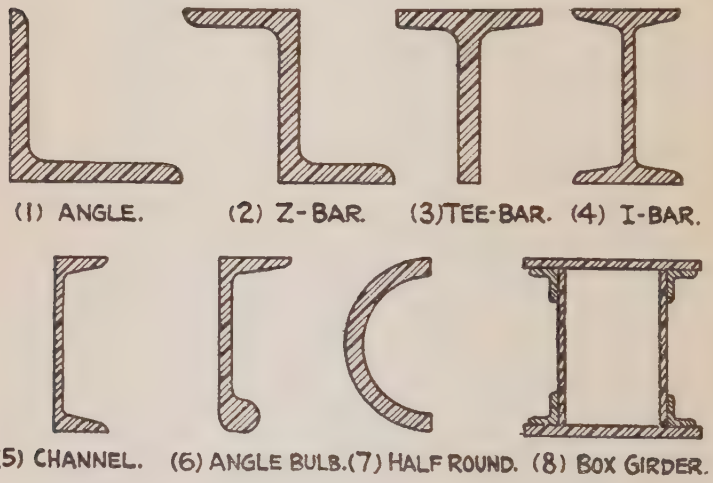

FIG. 76.

(No. 5.) *Channel-bars* are used for deck beams, frames and stiffeners.

(No. 6.) *Angle bulb,* used for deck-beams and frames on destroyers.

(No. 7.) *Half-round,* hollow or solid, used for moldings and finishings.

(No. 8.) *Box-girders* are usually made up of plates and angles; girders are made up of various other shapes as re-

quired, and are only used for very heavy connections and where great strength is required.

Shapes are designated by the dimensions of flanges, and the weight per foot, as a $5'' \times 3\frac{1}{2}'' \times 12$-pound angle.

GAGE, THICKNESS AND WEIGHT OF SHEET IRON OR STEEL.

Article 4654, Paragraph 2, Naval Instructions, 1913.

"(d) The reference to gage numbers and gages to specify the diameter or thickness in ordering wire, cable, rods, tubes and sheet metals shall not be made.

"Wire and cables heretofore specified by gage numbers, will be specified by the area in circular mils. Solid wire may be specified by the diameter in mils, when desired.

"Rods will be specified by diameter in mils. Tubing will be purchased by outside diameter in inches and the thickness of the wall will be specified in mils (thousandths of an inch).

"Sheet steel and iron, both black and galvanized, will be purchased by weight per square foot. Other sheet metals will be purchased by thickness in mils or by weight per square foot, in accordance with commercial practice.

"In leaflet and other specifications sheet metals will be specified by thickness in mils or by weight per square foot, or both, as may be necessary."

Table 43 gives the weights per square foot and thickness of flat and corrugated sheet steel, black and galvanized; as required by Navy Department Specifications 47S10b of March 1, 1918.

Table 43.—Weights and Dimensions of Navy Standard Flat and Corrugated Sheet Steel.

(From Navy Department Specifications 47S10b—March 1, 1918.)

Nominal thickness of black sheets (inch).	Weight per square foot.						
	Flat black sheets.		Galvanized sheets, with maximum zinc coating of 2.50 ounces.				
			Flat.		Corrugated.		Zinc coating, minimum weight (ounces).
	Pounds.	Ounces.	Pounds.	Ounces.	Pounds.	Ounces.	
0.141	5.625	90	5.781	92.5	....	.....	1.65
0.125	5.000	80	5.156	82.5	....	.....	1.65
0.109	4.375	70	4.531	72.5	4.88	78.28	1.65
0.094	3.75	60	3.906	62.5	....	.....	1.65
0.078	3.125	50	3.281	52.5	3.54	56.64	1.65
0.070	2.812	45	2.968	47.5	....	.....	1.65
0.063	2.50	40	2.656	42.5	2.86	45.76	1.65
0.056	2.25	36	2.406	38.5	....	.....	1.65
0 050	2.000	32	2.156	34.5	2.32	37.12	1.65
0.044	1.75	28	1.906	30.5	....	.....	1.65
0.038	1.50	24	1.656	26.5	1.78	28.48	1.65
0.034	1.375	22	1.531	24.5	1.65	26.40	1.50
0.031	1.25	20	1.406	22.5	1.51	24.16	1.50
0.028	1.125	18	1.281	20.5	1.38	22.08	1.50
0.025	1.000	16	1.156	18.5	1.24	19.84	1.50
0.022	0.875	14	1.031	16.5	1.11	17.76	1.40
0.019	0.75	12	0.906	14.5	0.98	15.68	1.40
0.017	0.687	11	0.843	13.5	0.91	14.56	1.35
0.016	0.625	10	0.781	12.5	0.85	13.6	1.35
0.014	0.562	9	0.718	11.5	....	.....	1.35
0.013	0.50	8	0.656	10.5	....	.....	1.35

When extra large sizes are required, they should not exceed the maximum dimensions given below:

Black sheets, 40 to 90 ounces per square foot, inclusive.

Thickness (inch).	Ounces (per square foot).	Dimensions.
0.141.....	90.....	Up to 21 inches wide the maximum length will be 20 feet. As the width increases from 24 inches to 66 inches (maximum width), the maximum length will decrease from 20 feet to 15 feet.
0.109 and 0.125	70 and 80..	Up to 24 inches wide the maximum length will be 19 feet. As the width increases from 24 inches to 66 inches (maximum width), the maximum length will decrease from 19 feet to 15 feet.
0.078 and 0.094	50 and 60..	Up to 54 inches (the maximum width), the maximum length will be 13 feet.
0.063 and 0.070	40 and 45..	Up to 54 inches (the maximum width), the maximum length will be 13 feet.

Table 43.—Weights and Dimensions of Navy Standard Flat and Corrugated Sheet Steel.—Continued.

Galvanized sheets, 8 to 90 ounces per square foot, inclusive, and black sheets, less than 40 ounces per square foot.

Thickness (inch).	Ounces (per square foot).	Dimensio
0.038 to 0.141...	24 to 90....	Up to 48 inches wide (the maximum width), the maximum length will be 12 feet.
0.025 to 0.034...	16 to 22....	Up to 28 inches wide the maximum length will be 12 feet. As the width increases from 28 inches to 48 inches (the maximum width), the maximum length will decrease from 12 feet to 10 feet.
0.019 and 0.022.	12 and 14...	Up to 28 inches wide the maximum length will be 12 feet. As the width increases from 28 inches to 44 inches (the maximum width), the maximum length will decrease from 12 feet to 10 feet.
0.017.....	11.....	Up to 28 inches wide the maximum length will be 12 feet. As the width increases from 28 inches to 42 inches (the maximum width), the maximum length will decrease from 12 feet to 10 feet.
0.013 to 0.016...	8 to 10.....	Up to 28 inches wide the maximum length will be 12 feet. As the width increases from 28 inches to 36 inches (the maximum width), the maximum length will decrease from 12 feet to 10 feet.

Table 44.—Standard Machine Screws.

(Data from Navy Department Specifications 42S5b—October 2, 1916, and 41T15a—April 2, 1917, and decimal equivalents.)

Screw No.	Threads per in.	Diam. mils.	Nearest diam. in 64th.	Tap drill wire gage No.	Dec. equiv. or diam. mil.	Nearest diam. in 64th.
0	80	.060	1/16 +	56	.0465	3/64 +
1	72	.073	5/64 +	53	.0595	1/16 +
2	64	.086	3/32 +	50	.0700	1/16 —
3	56	.099	7/64 +	47	.0785	5/64 —
4	48	.112	7/64 —	43	.0890	3/32 +
5	44	.125	1/8	41	.0960	3/32 —
6	40	.138	9/64 +	35	.1100	7/64 —
7	36	.151	5/32 +	31	.1200	1/8 +
8	36	.164	11/64 +	29	.1360	9/64 +
9	32	.177	11/64 —	28	.1405	9/64 —
10	30	.190	3/16 —	24	.1520	5/32 +
12	28	.216	7/32 +	17	.1730	11/64 —
14	24	.242	1/4 +	10	.1935	3/16 —
16	22	.268	17/64 —	3	.2130	7/32 +
18	20	.294	19/64 +		.234	15/64
20	20	.320	5/16 —		.261	17/64 +
22	18	.346	11/32 —		.281	9/32
24	16	.372	3/8 +		.296	19/64
26	16	.398	25/64 +		.323	21/64 +
28	14	.424	27/64 —		.339	11/32 +
30	14	.450	29/64 +		.368	3/8 +

NOTE.—The sign of plus indicates "FULL," the sign of minus indicates "SCANT."

Table 45.—U. S. Standard Machine Taps.

For U. S. Standard Bolts and Tap Rivets.

(Data from Navy Department Specifications 43B11—August 2, 1915.)

Outside diameter of screw in inches.	Threads per inch.	Diameter at root of thread in inches.	Tap drill in inches.
1/4	20	.185	7/32
5/16	18	.240	1/4
3/8	16	.294	5/16
7/16	14	.344	11/32
1/2	13	.400	13/32
9/16	12	.454	15/32
5/8	11	.507	17/32
3/4	10	.620	5/8
7/8	9	.731	3/4
1	8	.837	27/32
1 1/8	7	.940	1 1/32
1 1/4	7	1.065	1 5/32
1 3/8	6	1.160	1 9/32
1 1/2	6	1.284	1 13/32
1 5/8	5 1/2	1.389	1 1/2
1 3/4	5	1.491	1 5/8
1 7/8	5	1.616	1 3/4
2	4 1/2	1.712	1 27/32

STEEL RIVET RODS AND RIVETS FOR HULL CONSTRUCTION.

(Navy Department Specifications 43R1c—August 1, 1917.)

Physical and Chemical Requirements.—The physical and chemical requirements for each grade of material shall be in accordance with Table 46.

Table 46.

Grade.	Material.	Tensile strength, pounds per square inch.	Minimum elongation. Test specimens. Type 3.	Minimum elongation. Test specimens. Type 1.	Maximum amount. P.	Maximum amount. S.
			Per cent.			
Medium	Open hearth, carbon steel.	58,000 to 68,000	28	30	0.04	0.04
High tensile.	Open hearth steel, with not less than 1 per cent nickel.	75,000 to 90,000	23	25	.04	.04

Tensile Test Specimens. (a) *Types.*—Type 3 shall be used unless where Type 1 is necessary to suit the capacity of the testing machine.

(b) *For Test Specimens, Type 3.*—The elongation shall be measured in accordance with the following table:

Table 46-A.

Diameter of rod.	Length in which measured.
	In.
Up to ¾ inch, inclusive	2
Over ¾ to ½ inch, inclusive	4
Over ½ to ¾ inch, inclusive	6
Over ¾ inch	8

(c) *For Test Specimens, Type 1.*—The elongation shall be measured on a length of 2 inches.

(d) The minimum elongation for test specimens, Type 3 and Type 1, shall be as given in the table of physical and chemical requirements.

Tests. (a) *Definition of a Lot.*—Rivet rods shall be tested by lots. A lot shall consist of all material rolled from an individual melt at a continuous rolling and grouped into sizes varying not more than ¼ inch from the maximum to the minimum of the gages represented.

(b) *Tensile Tests for High Tensile and Medium Steel.*—Four tensile test specimens shall be prepared from each lot unless the lot embraces but 2 tons or less, when two tensile test specimens shall be taken. Each specimen shall be taken from a separate rod; shall represent the maximum and minimum gages in the lot; and, if practicable, shall be taken from different ingots. All of these tensile test specimens shall meet the requirements given in Table 46 above for the grade of steel represented, and no lot will be accepted if there is a difference of more than 8000 pounds per square inch in tensile strength between any two of the specimens.

(c) *Bending Tests for Medium Steel.*—Two bending test specimens shall also be taken from each lot of medium steel. These bending test specimens shall be bent cold 180° flat on themselves without showing any cracks or flaws on the convex side of the bend. At the discretion of the inspector, bending tests for medium steel may be omitted.

(d) *Upsetting Tests for High-Tensile and Medium Steel.*—Specimens shall be cut in length one and one-fourth times the diameter of the rod. The number of upsetting test specimens shall equal the number of tensile test specimens, but in no case shall it be less than two for each diameter of each melt. Specimens from high-tensile steel rods shall be required to stand hammering down cold in a longitudinal direction to 60 per cent of the original length (of the specimens), and medium steel rods to 50 per cent of the original length (of the specimens), without showing seams or other defects which would, in the judgment of the inspector, tend to produce defects in the manufactured rivet.

(e) *Rods Shall Not be Annealed or Heat Treated.*—The foregoing tests shall be made on rods which have not been annealed or given other special heat treatment.

Table 47.

Tolerances.	Under.
	In.
Up to $\frac{1}{4}$ inch, inclusive	0.010
Over $\frac{1}{4}$ to $\frac{1}{2}$ inch, inclusive	.014
Over $\frac{1}{2}$ to $\frac{3}{4}$ inch, inclusive	.016
Over $\frac{3}{4}$ to 1 inch, inclusive	.020
Over 1 to $1\frac{1}{4}$ inch, inclusive	.024
Over $1\frac{1}{4}$ inch	.030

Manufactured Rivets.

Material.—The rods from which rivets are manufactured shall comply with the physical and chemical requirements given herein.

Form.—Rivets and tap rivets shall conform to the particulars given for the respective types on pages 401 to 406, inclusive. Their heads must be concentric with the shanks.

Manufacture. (a) *Medium Steel Rivets and Tap Rivets.*—These may be made on either the hot or cold heading machine up to $\frac{3}{4}$-inch size, inclusive; above that size they shall be made on the hot heading machine.

(b) *High-Tensile Rivets.*—All high-tensile steel rivets over $\frac{3}{8}$ inch in diameter shall be made by the hot heading process. Rivets $\frac{3}{8}$ inch and under in diameter may be made by the cold heading process, provided the rivets are annealed after heading; the tests herein specified for manufactured rivets shall be made, in the case of high-tensile steel rivets manufactured by the cold heading process, after the rivets have been annealed.

(c) *Tap Rivets.*—These must be milled under the head when made in a hot heading machine. When made in a cold heading machine they will be accepted without being milled, subject to the finish under the head being satisfactory.

All tap rivets, unless specified otherwise, shall have United States standard threads as in following table. The threaded part shall extend to the bottom of head. The finish at junction of threaded part with bottom of head must be such as will permit the tap to be properly seated.

Table 48.

Outside diameter.	Root diameter.	Threads per inch.
In.	*In.*	
$\frac{1}{2}$	0.40	13
$\frac{5}{8}$	.507	11
$\frac{3}{4}$	.620	10
$\frac{7}{8}$	.731	9
1	.837	8
$1\frac{1}{8}$	.940	7
$1\frac{1}{4}$	1.065	7

Finish.—All rivets must be free from scale, fins, seams, rust or other defects.

Tests of Medium and High-Tensile Rivets. (a) *Number of Tests.*—From each lot of rivets of each diameter presented for final inspection, boxed or kegged ready for shipment, there shall be taken, at random, six rivets for test.

(b) *Cold Tests.*—Three rivets shall be flattened out cold under the hammer to a thickness of one-half the original diameter of the part flattened without showing cracks or flaws. Rivets over an inch in diameter shall be flattened to three-fourths of the original diameter.

(c) *Hot Tests.*—Three rivets shall be flattened out under hammer to a thickness not exceeding one-fourth of the original diameter of part flattened without showing cracks; heat to be ordinary driving heat.

(d) In the case of cold headed rivets the foregoing tests shall be made after the rivets have been heated and air-cooled.

Additional Tests for High-Tensile Steel Rivets. *Shearing Strength.*—From each lot of each diameter, presented for final inspection, boxed or kegged ready for shipment, there shall be taken at random, three rivets for shearing test. These rivets shall be driven hot for test under double shear. The shearing strength when so tested shall not be less than 64,000 pounds per square inch, computed on the actual shearing area of the rivet as driven; *i. e.,* the area corresponding to the area of the rivet hole, not the nominal diameter of the rivet.

Table 49.

Tolerances.	Under.	Over.
	In.	*In.*
Up to and including $\frac{1}{4}$ inch.....	0.01	0.01
Over $\frac{1}{4}$ to $\frac{1}{2}$ inch, inclusive.....	.014	.01
Over $\frac{1}{2}$ to $\frac{3}{4}$ inch, inclusive.....	.016	.02
Over $\frac{3}{4}$ to 1 inch, inclusive.....	.020	.02
Over 1 to $1\frac{1}{4}$ inches, inclusive.....	.024	.02
Over $1\frac{1}{4}$ inches.....	.030	.02

Marking of Rivets.—(a) All rivets shall have grade marks in accordance with the particulars given on page 442. In medium steel tap rivets the cross mark shall be on top of the stud part. In high-tensile steel tap rivets the flutes shall be placed as illustrated for the ordinary rivets of countersunk types.

(b) Rivets may have manufacturer's trade or other marks thereon subject to these not interfering with the required grade marks or with the efficiency of the rivets.

Length of Rivets for Ordering.—The length for ordering pan- and button-head rivets is measured exclusive of the head; for countersunk rivets and taps the ordered length includes the head to the top of the countersink. In particulars of rivets the dimension for diameter should precede that for the length.

STEEL SHAPES AND BARS FOR HULL CONSTRUCTION.

Including Material for Drop and Miscellaneous Forgings.

(Navy Department Specifications 46S1d—May 1, 1917.)

Finished Material.—All shapes and bars shall be true to section, free from injurious defects, and shall have a workmanlike finish. Round bars must have practically perfect circular section, and any difference in the largest and smallest diameter of a bar in excess of the tolerance specified in Table 53 will be sufficient cause for rejection. Flat bars shall have square edges, unless otherwise specified. All shapes and bars must be straight and out of wind.

Physical and Chemical Requirements.—All material shall be of uniform quality. The physical and chemical requirements of the various grades of material for shapes and bars shall be in accordance with Table 50.

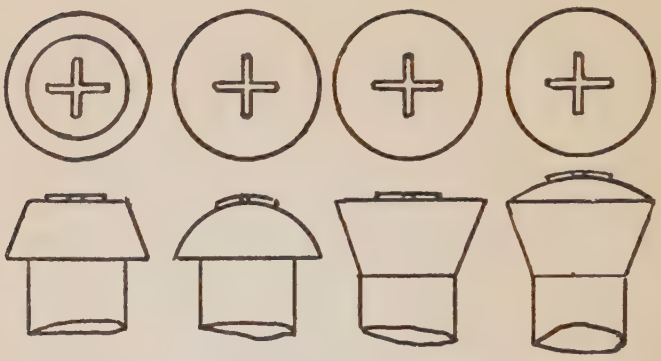

MEDIUM STEEL.

Cross in relief. Proportions about as shown. Projections about $\frac{1}{32}$ inch.

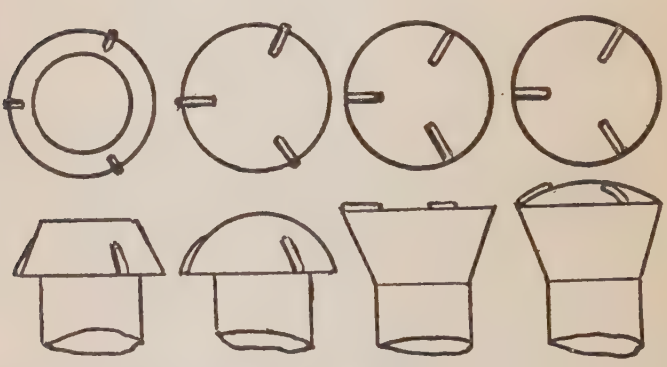

HIGH TENSILE STEEL.

Flutes in relief. Proportions about as shown. Projections about $\frac{1}{32}$ inch to $\frac{1}{16}$ inch, these in pan and button heads to taper to nothing at top; in other heads no taper.

FIG. 77.—Grade Marks for Rivets.

Table 50.

Grade.	Material.	Minimum tensile strength per square inch.	Minimum elongation. Test specimens. Type 1.	Minimum elongation. Test specimens. Types 2 and 3.	Maximum amount of. P.	Maximum amount of. S.	Cold bend.
		Pounds.	*Per cent.*	*Per cent.*	*Per cent.*	*Per cent.*	
Soft, for flanging.	Open-hearth carbon steel.	50,000	35	30	0.05 acid; 0.04 basic.	0.05	180° flat on itself.
Medium	Open-hearth carbon steel.	60,000	28	25	0.05 acid; 0.04 basic.	0.05	For test specimens below ¾ inch in thickness, 180° flat on itself. For test specimens ¾ inch or more in thickness the bends will be 180° to a diameter of one thickness.
High tensile...	Open-hearth carbon, nickel, or silicon steel.	80,000	25	20	0.05 acid; 0.04 basic.	0.05	180° to a diameter of one and one-half thicknesses.
Common.....	Open-hearth or Bessemer steel.	55,000	27	22	No chemical analysis required.		180° to a diameter of one thickness.

Tensile Test Specimens.—(a) For test specimens of shapes and flats, Types 2 and 3, the elongation shall be measured in accordance with Table 51.

Table 51.

Nominal thickness of legs or webs of shapes or nominal thickness of flats.	Length in which measured.
	In.
¼ inch or less	2
Over ¼ to $\frac{3}{16}$ inch, inclusive....	4
Over $\frac{3}{16}$ to ¼ inch, inclusive....	6
Over ¼ inch	8

(b) For test specimens, Types 2 and 3, rounds, squares and hexagons: The elongation shall be measured in accordance with Table 52.

Table 52.

Nominal diameter, or distance across flats (shott diameter).	Length in which measured.
	In.
Up to ¼ inch, inclusive	2
Over ¼ to ½ inch, inclusive	4
Over ½ to ¾ inch, inclusive	6
Over ¾ to 1½ inches	8

(c) Type 1 test specimen shall be used for all soft, medium and common bars over 1½ inches in diameter or thickness and for high tensile over 1 inch in diameter.

Tests (for other than Common Steel). (a) *Tensile Tests.*—Shapes and bars shall be tested by lots (or singly). A lot shall consist of all the material rolled from a melt, at a continuous rolling, into sections varying in the nominal thickness of the webs or legs of shapes, or the nominal diameter or thickness of other sections, not more than the following amounts from the maximum to the minimum of the gages represented:

Material up to and including ½ inch in diameter or thickness, varying not more than ¼ inch from the maximum to the minimum of the gages represented.

Material over ½ inch and up to and including 1½ inches in diameter or thickness, varying not more than ½ inch from the maximum to the minimum of the gages represented.

Material over 1½ inches and up to and including 3 inches in diameter or thickness, varying not more than 1 inch from the maximum to the minimum of the gages represented.

Material over 3 inches in diameter or thickness, varying not more than 2 inches from the maximum to the minimum of the gages represented.

Four longitudinal test pieces shall be prepared from each lot. Each specimen shall be taken from a separate shape or

bar, shall represent the maximum and minimum gage in the lot, and if practicable shall be taken from different ingots. All of these specimens must meet the requirements for the grade of steel required. No lot will be accepted if there is a difference of more than 10,000 pounds per square inch in tensile strength between any two of the four specimens.

(b) *Bending Tests.*—Two cold-bend specimens shall be taken from each lot, each from a different piece. These specimens shall meet the requirements of the specified grade of steel without sign of fracture on the outer curve. If one of these specimens fail, each piece rolled in the lot must pass the cold-bending test before being cut to desired length.

(c) *Opening and Closing Tests.*—Opening and closing tests will be made at the option of the inspector on individual angles, zee-bars, tee-bars, I-beams and channels which show evidence of mechanical defects, if in the opinion of the inspector the nature and extent of the defects need confirmation by such tests. The opening test shall consist of opening the section out flat while cold and the closing test shall consist of closing the section down flat on itself while cold. Under these tests the material shall not crack or tear.

(d) *Test of a Single Shape or Bar.*—In case of a single shape or bar one tensile and one cold-bending test will be made. These tests must meet the requirements for the grade of steel specified.

Tests, etc., for Common Steel.—*Common steel* may be rolled from any stock on hand, but all information required by these specifications, such as melt and charging records, etc., shall be supplied to the inspector to enable him to select test specimens. Two specimens shall be taken from each melt of finished material—one for tensile test and one for bending test.

Treatment.—The foregoing tests shall be made on material which has not been annealed or given other special heat treatment.

Tolerances. (a) *Weight.*—Shapes of 6 pounds per linear foot or less will be accepted if the weights are not over 3 per cent above or 5 per cent below the specified weight. Shapes over 6 pounds per linear foot will be accepted if the weights are not over 2 per cent above or 3 per cent below the specified weights.

(b) *Size.*—For sections having legs or flanges 3 inches or less in length, this length must not exceed $\frac{1}{16}$ inch over or under that ordered; for sections having legs or flanges over 3 inches in length, this length must not exceed $\frac{1}{8}$ inch over or under that ordered. The permissible variations for round, square and hexagon bars and for flat bars are given in Tables 53 and 54.

Table 53.—Round, Square, and Hexagon Bars.

Size of bar.	Variation.	
	Under.	Over.
	In.	*In.*
Up to $\frac{1}{2}$ inch, inclusive	0.007	0.007
Over $\frac{1}{2}$ to 1 inch, inclusive	.010	.010
Over 1 to 2 inches, inclusive	.016	.031
Over 2 to 3 inches, inclusive	.031	.047
Over 3 to 5 inches, inclusive	.031	.094
Over 5 inches	.063	.125

Table 54.—Flat Bars.

Width of bar.	Variation in width.		Variation under and over nominal thickness.			
	Under.	Over.	$\frac{3}{16}$ inch and under.	Over $\frac{3}{16}$ to $\frac{1}{2}$ inch.	Over $\frac{1}{2}$ to 1 inch.	Over 1 inch.
	In.	*In.*	*In.*	*In.*	*In.*	*In.*
Up to 1 inch, inclusive	0.016	0.031	0.006	0.008	0.010	0.02
Over 1 to 2 inches, inclusive	.031	.047	.008	.012	.015	.03
Over 2 to 4 inches, inclusive	.047	.063	.010	.015	.020	.03
Over 4 inches	.063	.094	.010	.015	.020	.03

Marking of Common Steel.—Common steel shall, in addition to the other marks prescribed, have painted thereon conspicuously the word "common." All invoices or "reports of material shipped," covering this class of material, shall be plainly marked with the word "common."

Notes for Information of Supply Officers.—(a) The size limits for bars under these specifications are intended to be:

(1) Flats up to 6 inches, inclusive, including those for hull construction work.

(2) Rounds up to 7 inches, inclusive.

(3) Squares up to 5½ inches, inclusive.

(4) Hexagon or similar bars not to exceed in area the limit set for rounds.

(b) Flats for hull construction work over 6 inches wide should be required as universal plates under specifications for "steel plates for hull and hull construction."

(c) Bars outside limits of size given above should be required under the latest issue of Navy Department specifications for "steel forgings for hulls, engines and ordnance," or "steel slabs, blooms, billets and bars for reforging," depending upon purpose for which intended.

(d) These specifications apply to all sizes of angles, channels or similar shapes.

STEEL PLATES FOR HULLS AND HULL CONSTRUCTION FOR THE UNITED STATES NAVY.

(Navy Department Specifications 48S5b—June 1, 1916.)

Finish.—Plates shall be flat, free from all injurious defects, and shall have a workmanlike finish. All plates of 5.1 pounds per square foot and under shall be reheated preliminary to final rolling so as to insure that the finished plates will be straight and free from warps and buckles.

Physical and Chemical Requirements.—(a) The physical and chemical requirements and kind of material for plates shall be in accordance with Table 55.

Table 55.

Grade.	Material.	Minimum tensile strength.	Minimum elongation.	Maximum amount of.		Cold bend.
				P.	S.	
		Lbs. pr. sq. inch.	*Per cent.*	*Per cent.*	*Per cent.*	
Soft or flange steel.	Open hearth carbon steel.	50,000	30	0.05 acid. .04 basic.	0.05	180° flat on itself.
Medium steel..	Open hearth carbon steel.	60,000	25	0.05 acid. .04 basic.	0.05	For material under 30.6 pounds per square foot, 180° flat on itself for longitudinal, and 180° to a diameter of one thickness for transverse. For material 30.6 pounds per square foot and over, 180° to a diameter of one thickness for longitudinal, and two thicknesses for transverse.
High tensile steel.	Open hearth carbon, nickel or silicon steel.	80,000	20	0.05 acid. .04 basic.	0.05	180° to a diameter of one and one-half thicknesses for longitudinal, and 180° to a diameter of two and one-half thicknesses for transverse.
Common steel.	Open hearth or Bessemer steel.	55,000	22	No chemical analysis required.		180° to a diameter of one thickness.

(b) *Permissible Variations.*—In melt and individual tests of plates under 60 pounds per square foot, the specimens for tensile tests shall be required to average the requirements of the grade of steel they represent; but no test shall fall more than 3000 pounds in tensile strength, or 2 units of per cent in elongation below the requirements for steel of the grade. An additional allowance for transverse specimens shall be a deduction of 1 unit of per cent in elongation for each increase of 5 pounds per square foot in thickness for plates of 30 pounds and over; provided that the minimum elongation for any such transverse specimen shall be 20 per cent for medium steel and

16 per cent for high-tensile steel. For plates 60 pounds per square foot and over, a variation in tensile strength only, of 3000 pounds below the requirement for steel of the grade, will be allowed.

Test Specimens. (a) *Elongation.*—For plates up to and including 5.1 pounds per square foot, the elongation shall be measured on a length of 2 inches; over 5.1 pounds per square foot, up to and including 7.65 pounds, in 4 inches; over 7.65 pounds per square foot, up to and including 10.2 pounds, in 6 inches; over 10.2 pounds per square foot, and under 60 pounds per square foot, in 8 inches. The test specimens may be either Type II or Type III.

For plates 60 pounds per square foot and over the elongation shall be measured in 2 inches, using the standard 2-inch turned specimen (Type I), in which case the minimum shall be 27 per cent for medium steel and 22 per cent for high-tensile steel.

(b) *Bending.*—The bending test specimens and manner of making bending tests shall be as required by the above-mentioned "General Specifications for Inspection of Material."

Common Steel.—(a) Common steel may be rolled from any stock on hand, and the stamping of serial numbers on separate pieces may be omitted, provided that all other information required by these specifications, such as melt and charging records, etc., be supplied to the inspector, to enable him to select test specimens.

(b) Two test specimens shall be taken from each melt of finished material—one for tension and one for bending.

(c) Common steel plates shall, in addition to other marks prescribed, have painted conspicuously on each plate the letter "C," not less than 12 inches in height. All invoices or reports of material shipped shall be plainly marked "common."

Material Presented for Test.—(a) Plates under 60 pounds per square foot may be tested as individual plates or by melts.

Plates 60 pounds per square foot and over shall be tested as individuals. On individual test the plate is accepted or rejected on the result of the tests representing that plate only. On melt test all the material from the same melt is accepted or rejected on the result of the tests representing the melt, subject, however, to such special tests as may be considered necessary by the inspector. If, however, the melt fails as a melt, and the manufacture desires to submit the plates thus represented for individual test, the inspector will test such plates; but he will only do so after the manufacturer has made preliminary tests on test specimens stamped by the inspector for this purpose, and provided these preliminary tests present evidence to the inspector that the material meets the requirements of the specifications.

(b) When a melt is rolled and presented for test as a melt, six plates shall be selected by the inspector for test, each plate from a different ingot, if practicable. The plates shall be so selected as to represent the topmost and bottommost parts of the ingots. When the difference in gage of the plates rolled is such that six plates will not properly represent the melt, sufficient additional plates shall be selected for test to give satisfactory information of the physical characteristics of all the gages rolled.

(c) When a melt is presented for test preliminary to rolling, six plates shall be rolled from slabs or ingots which may be selected by the inspector, each plate being from a different slab, and when practicable from a different ingot. The plates shall be selected to represent the topmost and bottommost parts of the ingots. Plates rolled for such a test shall not vary from the maximum to the minimum gage—more than 2.7 pounds per square foot for plates 10.2 pounds per square foot and under; more than 5 pounds per square foot for plates above 10.2 pounds, including 30.6 pounds per square foot; more than 10 pounds per square foot for plates over 30.6 pounds per

square foot. Plates subsequently rolled from such a melt shall be of the gages tested or intermediate gages, except that the inspector may authorize the rolling of gages not more than 25 per cent above and below the gages tested in the case of plates 10.2 pounds per square foot and under, and not more than 5 pounds per square foot above and below in the case of plates over 10.2 pounds per square foot. The inspector shall satisfy himself that the material rolled has received practically the same treatment as the test plates, especially as to the amount of working, temperature during finishing, and amount of discard from the ingot.

(d) Plates rolled to weights other than those authorized on the melt test will be tested as individuals.

Number of Tests, Sheared Plates. (a) *Melt Tests.*—One tensile test specimen shall be located by the inspector on each of four of the plates submitted for test. Two of the test specimens shall be cut longitudinally, that is, in the direction of greatest working, and two transversely, that is, in the direction of least working. These four test specimens shall be selected so as to represent the upper and lower and intermediate gages rolled, as specified in paragraph above. Two bending test specimens shall be located by the inspector on each of the two remaining plates, one test specimen on each plate being cut longitudinally and one transversely. These bending test specimens shall be taken from a plate representing the topmost part of the ingot.

(b) *Individual Tests.*—When a plate under 60 pounds per square foot is submitted for individual test, three test specimens shall be located by the inspector. Two of these shall be tensile specimens, one to be taken longitudinally, and one transversely, one being from each end of the plate. The third, a transverse cold bend, shall be taken from the opposite end from which the transverse tensile specimen is taken.

(c) For plates 60 pounds per square foot and over two test specimens shall be located by the inspector. One of these will

be a tensile specimen, which will represent the material nearest the bottom of the ingot; the other will be a cold-bend specimen, which will be taken from the opposite end of the plate from the tensile specimen. The tensile test specimen shall be cut transversely. Both specimens shall be cut from the ends of the plate midway between the center and the outer edge.

Universal Plates.—(a) Universal plates shall be in accordance with the foregoing requirements for steel of the grade specified except that the melt and individual tests shall be as given in the following:

(b) *Melt Tests.*—One tensile test specimen shall be located by the inspector on each of four of the plates submitted for test. All of the test specimens shall be cut longitudinally, that is, in the direction of greatest working. One cold-bending test specimen, cut longitudinally, shall be located by the inspector on each of the two remaining plates. If practicable, both cold-bending test specimens shall be cut from the end representing the top of the ingot.

(c) *Individual Tests.*—When a plate is submitted for individual test, one tensile and one cold-bending test specimen, both cut longitudinally, shall be located by the inspector. The tensile test specimen shall be located to represent the material nearest the bottom of the ingot and the cold-bending test specimen will be taken from the opposite end of the plate.

Galvanized Plates. (a) *Physical and Chemical Requirements.*—Plates to be galvanized shall meet the requirements for steel of the grade specified before galvanizing and shall conform to the permissible variations in weight and gage before galvanizing.

(b) *Freedom from Surface Defects.*—Galvanized plates must be thoroughly and evenly galvanized; of a bright appearance; free from pits, blisters and other defects; and must be commercially flat. No rerolling of the plates after leaving the galvanizing bath will be permitted except for the purpose

of straightening. The coating must not break off when scraped with a knife or if the plate is bent 90°.

(c) *Samples from Galvanizing Bath.*—The galvanizing material must show at least 98 per cent pure zinc, determined from a sample taken at random by the inspector from the upper half of the galvanizing bath. The sample may be taken at any time, provided the manufacturer agrees to have the sample represent the coating for the order; otherwise, when the inspector has been unable to secure a sample of the bath used for the order, the purity of the bath may be established by a sample of galvanized plate taken at random from the finished material.

(d) *Amount of Coating.*—The increase in weight due to galvanizing shall not exceed $2\frac{3}{4}$ ounces nor shall it be less than 2 ounces per square foot of surface coated. The determination of the amount of coating per square foot shall preferably be made by establishing the practice of the firms, at convenient intervals, by weighing plates as follows: First, weight in bulk of selected plates in the black, after pickling. Second, weight of the same selected plates after galvanizing. If this course cannot be pursued, a selected sample from the galvanized plates for the order, of 2 square feet of surface, will be sent to a government laboratory, at the expense of the contractor, where determination will be made of the amount of zinc coating per square foot.

Permissible Variations in Weight and Gage.—The maximum permissible variations in weight and gage applicable to single plates will be in accordance with Tables 56 and 57.

Character of Material for Certain Purposes.—(a) Narrow plates or flats intended for seam straps or similar purposes may be rolled on universal or bar mill and tested in accordance with requirements for universal plates.

(b) The use of universal rolled plates will not be permitted for butt straps or for any purpose where the transverse strength of the material is of particular importance.

Table 56.—Plates Less Than 10 Pounds per Square Foot.

Weight ordered (pounds per square foot).	Allowable variation in weight (per cent).	Allowable undergage at edge (per cent).						
		Up to 40 in. inclusive.	Over 40 in. to 50 in. inclusive.	Over 50 in. to 60 in. inclusive.	Over 60 in. to 70 in. inclusive.	Over 70 in. to 80 in. inclusive.	Over 80 in. to 90 in. inclusive.	Over 90 in. to 100 in. inclusive.	Over 100 in.
Up to 5 exclusive	3 over, 5 under	12	15	18	21	24	..	..	..
5 inclusive to 7½ exclusive	do	10	12	14	16	18	20	22	24
7½ inclusive to 10 exclusive	do	8	10	11	12	13	14	15	16

Table 57.—Plates 10 Pounds per Square Foot and Over.

Weight ordered (pounds per square foot).	Allowable variation in weight (per cent).	Allowable undergage at edge (per cent).						
		Up to 66 in. inclusive.	Over 66 in. to 80 in. inclusive.	Over 80 in. to 90 in. inclusive.	Over 90 in. to 100 in. inclusive.	Over 100 in. to 110 in. inclusive.	Over 110 in. to 120 in. inclusive.	Over 120 in.
10 inclusive to 12½ exclusive	3 over, 5 under	10	11	12	13	14	18	..
12½ inclusive to 15 exclusive	2 over, 3 under	8	9	10	11	12	14	16
15 inclusive to 17½ exclusive	do	6	7	8	9	10	11	13
17½ inclusive to 20 exclusive	do	5	5	6	7	8	9	10
20 inclusive to 25 exclusive	do	4	5	5	5	6	7	8
25 inclusive to 30 exclusive	do	3	3	3	4	5	5	6
30 inclusive to 40 exclusive	do	3	3	3	3	3	4	5
40 and up	do	2	2	2	3	3	3	4

NICKEL-STEEL PLATES.

(Navy Department Specifications 48S6a—September 1, 1917.)

Quality and Finish.—Plates shall be flat, of good quality, free from injurious defects, and shall have a workmanlike finish.

Method of Manufacture.—Nickel-steel plates shall be manufactured by the open-hearth process; all plates shall be oil or water tempered and annealed, and the whole of each plate shall be subjected to the same treatment at the same time.

Chemical Requirements.—(a) Plates shall contain not less than 3 per cent of nickel, not more than 0.05 per cent of phosphorus, nor more than 0.045 per cent of sulphur, and shall be of the best composition in all other respects.

(b) When practicable drillings for chemical analysis shall be taken from the part of each plate nearest to the top of the ingot from which it is rolled and from a point half the distance from the center of the plate to the surface of the plate as regards thickness; such drillings may be taken from the bending test specimens specified to be taken as indicated in paragraph (c) below.

Physical Requirements.—(a) All tests shall be made upon specimens taken from plates after final treatment.

(b) *Tensile Tests.*—One longitudinal specimen for tensile tests will be taken from each plate. For plates up to and including 1 inch in thickness, Type 2 test specimens shall be used; if the manufacturer prefers, Type 1 test specimens may be used for all applicable thicknesses. For plates over 1 inch in thickness, Type 1 test specimens shall be used. Each test specimen shall show a tensile strength of at least 80,000 pounds per square inch, and an elongation in 2 inches of at least 27 per cent. All tensile test specimens shall be taken from a location at the end of the plate nearest the bottom of the ingot from which the plate was rolled, and, for Type 1, shall be taken, when practicable, from a position half the distance from the center to the surface as regards the thickness of the plate.

(c) *Cold Bending Tests.*—Two longitudinal pieces cut from different plates in each heat, shall be doubled cold around a mandrel, the diameter of which is not more than the thickness of the piece tested, without showing any cracks. The ends of the pieces shall be parallel after bending. All bending test specimens shall be taken from the part of the plate nearest the top of the ingot from which the plate is rolled. The test specimens shall be 12 inches long, 1½ inches wide, and of the full thickness of the material from which taken. At the discretion of the inspector, bending specimens ½ inch square, taken with a hollow drill, may be substituted, but such specimens shall withstand being bent cold to 180° flat without sign of fracture on the outer surface; all such ½-inch square specimens shall be taken, when practicable, from a position half the distance from the center of the plate to the surface as regards thickness.

(NOTE.—Any of the foregoing provisions relative to location and type of bending test specimens that conflict with the requirements of any paragraph on cold bending tests appearing in the issue of General Specifications for Inspection of Material in effect at date of opening of bids, shall be understood to be accepted in place of the conflicting provisions of the General Specifications.)

Permissible Variations in Weight and Gage.—The maximum permissible variations in weight and gage will be in accordance with Table 58.

Table 58.

Weight ordered (pounds per square foot).	Allowable variation in weight (per cent).	Allowable undergage at edge (per cent).		
		Up to 90 inches, inclusive.	From 90 to 100 inches, inclusive.	Over 100 inches.
25 inclusive to 30 exclusive	2 over..... 3 under	3	4	5
30 inclusive to 40 exclusive	2 over..... 3 under	3	3	3
40 and up.....	2 over..... 3 under	2	3	3

STANDARD ZINCS AND MILD STEEL PROTECTORS FOR SEA CHESTS.

(Bureau C. & R. Circular Letter of September 4, 1915.)

No modifications will be made on ships under construction which would involve a change under the contract, and no changes will be made on vessels overhauling or repairing which would destroy work already installed. The latter cases will be met by such additions or extensions to the sea chests with steel protectors outside as will accomplish the same purpose. This will only be done as opportunity offers without interfering with the movements of vessels.

Pending further experience in service, rolled zinc protectors, in accordance with general type plan C. & R. 30230, Flat Zincs, are to be fitted to stern posts, rudders, strut hubs and stern tubes in way of propeller shafts. Zinc ring protectors are to be fitted on the *interior* flange of the torpedo mouthpiece castings, around the sluice valve openings. The fastenings for these rings are to be countersunk iron screws. No protectors are to be fitted on strut arms, nor are *outside* zinc plates to be fitted to torpedo openings.

For sea valves, protectors of flange or mild steel plate, $\frac{1}{2}$ inch thick in all cases, are to be substituted for zincs. Sea-chest castings, for both suction and discharge chests, are to extend $\frac{1}{2}$ inch beyond the outside of shell and the protector will be fitted as a doubler around this protection. It will be in the form of a circular ring or hollow rectangle of uniform width, with chamfered edges. It is desirable, where practicable, to so shape the steel protector that the fastenings will enter the sea-chest stiffening ring and avoid the possibility of leaks from holes through the shell plating.

Fastenings for steel protectors are to be countersunk steel tap rivets in way of stiffening rings. Where conditions necessitate fastenings beyond the limits of the stiffening rings, such fastenings are to be rivets.

All protectors, both zinc and steel, are to be thoroughly embedded in red lead and the steel protectors are to be calked, to prevent circulation of water behind them or where the brass sea-chest extension lips penetrate the protectors. Steel protectors are to be painted outside similar to the shell plating. Zinc protectors will not be painted.

On vessels now having zincs at scuppers, steel protectors are to be substituted as opportunity offers without interfering with the movements of vessels or destroying work already installed.

STEEL PROTECTORS FOR SEA CHESTS.

(Bureau C. & R. Letter of January 20, 1916.)

The purpose of substituting mild steel protectors for the present zinc protectors is the economy that will result by avoiding the necessity of as frequent renewal of protectors as is now required.

It is not the bureau's expectation that the new type of protectors can be substituted for the old zinc on all chests at one time, unless the vessel is detained in dock for more than the usual length of time on account of other work. It is desired, however, that the new installation be substituted for the old as rapidly as the work can be carried out, taking a few chests at a time. Careful fitting is an essential part of the work, and no more chests should be undertaken at any docking than can be satisfactorily completed—the zincs being renewed on the other chests.

The installation of the new type of protectors should be proceeded with on all vessels in active service, but in the case of vessels whose future life is probably limited, or which have types of chests that do not lend themselves readily to the new type of protector, the navy yard is authorized to exercise its judgment as to installing the new type of protectors or retaining the old zincs. It is suggested that after some of the vessels of the active fleet have been fitted and a better idea obtained as to the cost of the new type of protectors, the yards will be in a position to decide whether or not the change should be made.

QUESTIONS FOR SHIP FITTERS.

Q. Name the tools required by ship fitters on a battleship.

A. Pinch bar; calipers, inside and outside; file brush; complete set of hand cold chisels; dividers; complete set of twist drills; steel letters and figures for stamping; complete assortment of files; hacksaw; U. S. standard gage for sheet iron; chipping hammer; machinist's ball peen hammer; riveting hammers; maul; sledge; portable rivet forge; complete set of metal calking tools; side cutting, flat and round-nose pliers; center punches; drifts; complete set of fluted reamers; rivet sets and headers; 2-foot rule; assorted screw drivers; cross-handle solid screw drivers; tinner's shears; steel square; steel straight edges; steel wedges assorted; monkey wrenches; stillson wrenches; tap wrenches; breast drill with chuck and complete set of small drills; portable electric hand drill; ratchets for drilling; old man; pneumatic drills and chipping hammers complete with twist drills, tools and hose; hand lever punch and shears; complete sets of machine taps and dies; bench vise; complete set of flat drills; complete set of countersinks for metal.

Q. How are steel plates gaged?

A. By the weight in pounds per square foot. A cubic foot of wrought steel weighs 490 pounds, therefore a plate 1 foot square and 1 inch thick would weigh $\frac{1}{12} \times 490 = 40.8$ pounds. Steel plates are rolled, however, to 40 pounds, 20 pounds, 10 pounds, etc., to the square foot; a 40-pound plate has nominally a thickness of 1 inch, though it is slightly less than 1 inch thick; a 20-pound plate is nominally $\frac{1}{2}$ inch, 10-pound, $\frac{1}{4}$ inch, etc., and these designations are used in practical shipbuilding.

Q. Name the various shapes of material used in iron or steel shipbuilding, and the purposes for which they are used.

A. See page 430.

Q. Name the different kinds of rivets used in shipbuilding.

A. Pan head, straight and conical neck; button head, straight and conical neck; countersunk head, raised countersunk head and tap rivets.

Q. Name the different shapes of points, as driven on rivets, in ordinary practice.

A. Flush or countersunk; snap points; hammered points; and Liverpool points. (See standard rivet sheet, page 407.)

Q. What is meant by "rivet spacing"?

A. The number of diameters, of the rivet used, from center to center.

Q. What would be the rivet spacing on seams of plating (laps and straps), water-tight, single riveted?

A. See page 387.

Q. What is the largest size rivet that may be driven cold?

A. A $\frac{3}{8}$ inch, although for water-tight work this size should also be heated.

Q. Name the three shapes of taps comprising a set of machine taps, in the order which they would be used, for tapping threads all the way to the bottom of a hole which did not go entirely through the metal.

A. Taper, plug and bottoming.

Q. How would you find the size drill to use for a tap?

A. The diameter of the tap at the bottom of the thread is the size of the tap drill, the drill made slightly larger facilitates the work of tapping.

Q. Describe a soft patch.

A. A soft patch is a plate put on over a break, crack, hole or thin place in another plate. It is fastened on with tap bolts or tap rivets, and is made water-tight by putting a stopwater of red-lead putty or a fiberous packing, such as painted canvas or burlap in the joint.

Q. Describe a hard patch.

A. A hard patch is a piece of plate riveted to another plate, over a hole or break, and is made water-tight by calking.

Q. What is the faying surface of a plate?

A. It is the side placed against the members to which it is to be riveted. Plates should be punched or drilled and sheared

from the faying side to avoid having burrs come between the joints.

Q. What precautions should be taken before assembling new work, to prevent deterioration?

A. The faying surfaces and other parts which will be inaccessible after riveting up, should be painted with red lead.

Q. What are stop waters and where are they used?

A. Stopwaters are strips of tarred hemp felt, flat lampwick or burlap, soaked in a mixture of red and white lead, or sometimes a stiff mixture of red and white lead putty, and are placed between joints where water-tightness cannot be obtained by calking. Also where non-water-tight members pass through water-tight members, to prevent water passing from one side of the water-tight member to the other.

Q. How are oil stops prepared?

A. Stops for oil-tight work are made from ball lampwick, coated with a mixture of red lead and shellac; or canvas soaked in clear shellac and then coated with a mixture of red lead and shellac. (See page 379 for further details on stopwaters.)

Q. Name the various tools required for calking iron or steel.

A. Flat, side, cape, diamond point and gouge chisels; splitting tool; calking tool; fuller; butt tool; bent fuller; bent splitting tool; rivet tool.

Q. Describe the operation of calking a lap seam.

A. See page 342.

Q. Describe a red-lead gun and its use.

A. See page 341.

Q. Describe the practical method of laying off a shell plate by template.

A. See page 374.

Q. Describe the method for testing a compartment for water-tightness.

A. Compartments may be either tested with air or water pressure. In testing with air, the compartment is closed and

an air hose and pressure gage connected to it; when the air is turned on and the required pressure shows on the gage, soapy water should be smeared over all seams and rivet heads; this may be most easily accomplished with clean paint brushes; leaks will be readily detected by soap bubbles formed by the escaping air. Leaks may also be detected by hissing sounds of escaping air and definitely located by soap water test.

In testing with water, the compartment is filled and closed, a pressure gage is attached and by hydraulic pump, or hose connected from water main, or a stand pipe fitted to obtain the required pressure for testing. Any leaks found should be marked with chalk, to be calked after the pressure is taken off of the compartment. No calking should be done while there is pressure on the compartment.

Q. Describe the method of testing a water-tight door.

A. The air and water tests applied in a similar manner as for testing compartments, may be used. When it is not practicable or convenient to fill and close a compartment for this purpose, the door may be tested by chalking the bearing, after which close the door and put the dogs down evenly all around, open the door and note the result; the absence of chalk at any place on the gasket will show where the door would leak. The gasket should be taken out at such places and a liner of thin wood, pasteboard or paper, put behind it till it shows a good bearing all around. Manholes are tested in the same way. (See page 91 for care of water-tight doors.)

Q. How would you remove a dent from the outside plating?

A. If very deep, a hole should be drilled in the center for a draw bolt, which is extended through a heavy strong-back or bar placed across the concave side of the dent. While the draw bolt is being tightened up, the dent should be driven out by hammering from the convex side. It is sometimes necessary to heat the plate, at the dent, which may be done with a blow torch. Small dents may be sometimes forced out with a jack or driven out with hammers.

Q. Which side of a bulkhead is calked?

A. The side opposite the stiffeners.

Q. What is meant by the terms "continuous" and "intercostal" as applied to the members forming the structural parts of a ship?

A. When one member intersects other members, passing through them in solid form, it is said to be continuous.

When one member is severed by the intersection of others passing through it, and to which its terminals at the point of intersection are usually fastened, it is said to be intercostal.

Q. Describe the (flat plate) keel of a steel vessel.

A. It is the lowest center member of the structural part of a ship, and consists of plates thicker than the garboard plates, fitted along the center line under the floors. In beginning the construction of a ship, it is the first piece put in place.

Q. What is the middle line keelson?

A. A plate or combination of angles and plates fastened on the floors directly over the keel.

Q. What are bilge keelsons?

A. Girders placed at the lower turn of the bilge, usually composed of double angle bars fitted back to back, in large vessels with a bulb plate between, or a vertical plate upon which a rider plate is fitted.

Q. What are sister keelsons?

A. Girders placed between the middle line and bilge keelsons and usually similar in construction to the latter.

Q. What are docking keels?

A. Box-shaped girders built on the outside of the bottom of the ship, under the heavier weights, such as turrets, engines, boilers, etc. When the vessel is docked, blocks are so placed in the dry-dock that the docking keels will land on them and support the ship's structure at these points.

Q. What are bilge keels?

A. Bilge keels, sometimes called rolling chocks, are "V" or fin-shaped girders, built on to the outside of the bottom of the ship, running longitudinally, near the turn of the bilge, and are placed here to resist the inclination of rolling in a heavy sea-way.

Q. What are floors in iron or steel vessels?

A. Plates placed vertically in the bottom, extending from bilge to bilge, usually in way of every frame, to which the lower edge of each is connected, and to their upper edge, the reverse frames are riveted.

Q. What are intercostal floors?

A. Ranges of strong, short plates fitted between the longitudinal girders of the double bottom.

Q. What is a frame?

A. One of the numerous transverse ribs of channel bar or other shapes which form the skeleton of a ship.

Q. What are web frames?

A. Strong plates and angles fitted transversely to the frames, to which they are riveted, and are placed at intervals in the ship to add greater strength.

Q. What are reverse frames?

A. Angle bars riveted to the frames in reversed position for adding greater strength.

Q. What are frame liners?

A. Strips of plate, the width of the connecting flange of the frames, used as filling pieces in wake of outside strakes.

Q. Name and describe the different bulkheads on a ship.

A. Bulkheads are partitions by which compartments are formed on a ship. Transverse bulkheads run athwartships. Longitudinal bulkheads run fore and aft. A center-line bulkhead runs fore and aft in the center of the ship. A collision bulkhead is placed near the forward end to prevent water getting into the main portion of the ship in case of a head-on collision, and when the vessel is damaged near the stem.

Bulkheads are water-tight and non-water-tight. Non-water-tight bulkheads are built for strength only or to enclose a space.

A water-tight bulkhead will stand water pressure.

Q. What is the bounding bar of a bulkhead?

A. The angle or other shape forming the extreme connections between the bulkheads and the decks, sides and bottom of the ship.

Q. What are stiffeners?

A. Angles or other shapes fastened at intervals on bulkheads to stiffen them.

Q. What is a bulkhead liner?

A. A plate fitted on the inner side of an outside strake of the hull plating, in way of a bulkhead, usually extending from the first frame ford of the bulkhead to the first frame abaft the bulkhead, and is placed here to add strength at this point, compensating for the shell plating having been weakened by the numerous rivet holes of the bulkhead connection.

Q. What are the beams?

A. Heavy channels or other shapes, spanning the hull of the ship, or superstructure, from side to side, on which the deck is laid.

Q. What is the round-up or camber of a beam?

A. Difference in height between the center and ends, caused by the curve or slight arc given the beam to strengthen it.

Q. What is a bracket?

A. An angular-shaped plate fitted vertically as a support for beam stringer plates, angle-bar beams, etc.

Q. What is a bracket end?

A. A beam end forged in the shape of a bracket.

Q. What are staples and where are they used?

A. Staples are angles worked intercostally between the frames where they pass through a deck, between beams where they pass through a bulkhead, and on water-tight longitudinals between the floors. They are riveted to adjacent connections and calked to insure water-tightness at these points.

Q. What are longitudinals?

A. Strongly built girders running fore and aft through the lower part of the ship. They are made extra heavy through the main body of the vessel and reduced somewhat at each end.

Longitudinals are continuous when they pass solid through frames or other structural members, and are intercostal when other members are continuous through the longitudinal.

Q. What are double bottoms?

A. Spaces in the bottom of a vessel formed by an inner skin, and subdivided by water-tight floors and longitudinals into a number of water-tight compartments, thus localizing the damage; as in case the outer skin is pierced, only compartments at this point would fill.

Double-bottom compartments are entered through manholes fitted to the inner skin.

Q. What is the bilge?

A. The rounding of a vessel's bottom, the turn from the flat of the bottom to the upward rise of the sides; "bilges" is a term applied to the spaces on top of the inner bottom, in the fire rooms, engine rooms, etc., where waste water collects, and in which are located bilge suctions for pumping out.

Q. What is the shell plating?

A. The totality of plates covering the outside of a vessel's frame.

Q. What is the bottom plating?

A. Plating covering the frames below the water-line.

Q. What are the garboard plates?

A. The first plates next to and fastened to the keel.

Q. What is a strake?

A. One of the continuous ranges of plating or planking forming the shell extending fore and aft the whole length of the ship.

Q. What is a stealer or dropped strake?

A. A strake of plating or planking, not extending like others from end to end, but dropped between the continuous strakes

Q. What are partners?

A. Pieces of wood, angles or other metal bars, fitted upon or between the deck beams, under capstans, winches, etc., and around masts, for support and strength.

Q. What are doubling plates?

A. Additional plates to give strength where holes have been cut, or where excessive strain or wear is expected, and are fitted in wake of hawse pipes, anchor beds, holes for sea chests, etc. They are also placed forward for chafe of anchor chains, and aft in vicinity of stern post.

Q. What are stringers?

A. Longitudinal girders of different forms, fitted in various parts of a vessel for strength.

Q. What is a deck stringer?

A. A range of plating placed flat on the ends of deck beams.

Q. What are panting beams?

A. Beams fitted between decks in the fore and after peak of a vessel to prevent panting: Panting is a tendency to flexibility, as of the bottom of a tin pan or head of a drum and is caused by the force of waves against the bows or stern of a ship when her extremities are deeply buried in a sea.

Q. What is meant by the peak of a vessel?

A. The narrow part of a vessel's hold near the stem and stern.

Q. What are panting stringers?

A. Girders of angles or other shapes, or a plate stringer, fitted in the fore or after peak to prevent painting in these parts.

Q. What is a butt strap?

A. A plate placed over a butt seam, through which each end of the abutting plates are riveted.

Q. What is a seam strap?

A. A narrow plate placed over a seam, to which each side of the adjoining plates are riveted.

Q. What is a gusset?

A. An angular plate placed horizontally, for connection or strength. Gusset plates are often fitted to the ends of strong hold beams for more securely connecting them with the stringer plates.

Q. What is a bosom piece?

A. A short angle bar fitted in the throat of another angle bar for strength, or in the throat ends of two angles to connect them.

Q. What are coamings?

A. Raised borders around hatchways, skylights, etc.

Q. What are limbers, or limber holes?

A. Water courses in the bottom of wooden vessels; also holes cut in the under part of the frame floors.

In iron or steel vessels, the various ranges of apertures or holes in the lowest part of the structural members, all serving to allow a passage toward the pumps for water accumulating between the frame floors.

CHAPTER V.

INSTRUCTIONS FOR PLUMBERS AND FITTERS.

PIPE FITTING.

One of the most important operations in a successful job of pipefitting, is to take the measurements accurately.

The proper method of taking measurements for piping, is to first measure the distances from center to center of the different pipe lines, recording these on a sketch of the layout of the job.

In cutting the piping, allowances are then made for the fittings, which may be found by laying the fittings on the floor or bench, and taking measurements from them in their proper positions, as shown on the sketch.

CUTTING PIPE.

The smaller sizes of wrought iron and brass pipe, up to 2 inches in diameter, are usually cut with an ordinary wheel cutter. These cutters are made with one or three wheels. The latter is most convenient for cutting pipes in close places where it is impossible to swing the tool entirely around the pipe. Care should be exercised in using this tool, to keep it square with the pipe, so that all the wheels will run in the same groove, otherwise the end of the pipe, when cut off, will not be square, making it difficult to start the die for threading.

These tools should not be forced too much, but the cutters set down little by little, to avoid splitting the pipe, and to reduce to a minimum, the burr, which is always produced in the bore, and slightly on the outside of a pipe cut with this form of cutter. In order to give a pipe its full opening, which it should always have, this burr should be removed by reaming it out after cutting.

The larger sizes of pipe are most conveniently cut in a lathe, or with the cutting-head attachment found on most pipe threading machines.

THREADING PIPE.

The smaller sizes of pipe are usually threaded with solid dies, and the larger sizes with adjustable dies. The stocks of large dies are generally fitted with a threaded bushing, having set screws to clamp it to the pipe, which draws the die on, starting the thread without difficulty. The smaller sizes not having this attachment, must be started by hand. It has been found in practice, that the slight burr formed on ends cut with wheel cutters will greatly facilitate the starting of dies, by causing a deeper thread to be cut with the first few turns, which draws the die on till it catches a good run of thread.

Care should be taken to keep the stock square with the pipe, to insure having the thread straight. The dies should be thoroughly cleaned each time, removing all shavings of former cuts before beginning a new thread.

Oil should be used freely on the dies when threading iron pipe. It lightens the work, preserves the dies and makes a smoother thread. A good grade of heavy machine oil is best for this purpose. No lubricant should be used when cutting threads on brass or copper pipe, and the chips should be blown out occasionally to prevent tearing the threads.

BENDING IRON PIPE.

Bends, in locations where it is possible to use them, have many advantages over fittings. A bend offers less resistance to the passage of fluids through the pipe, on account of the bore remaining smooth and the turn being easier. An angle, if made by a bend, does not weaken the pipe as if cut for fittings; to reduce the number of fittings to a minimum is economy both in cost and weight, and also reduces the probability of leaks. Besides, neatly made bends add greatly to the appearance of a job.

The smaller sizes, up to $1\frac{1}{2}$ inches, may be bent cold to an ordinary radius, say of ten times the diameter of the pipe.

There are many excellent devices for bending pipe, such as grooved forms of different radii, operated by screw power and sometimes by hydraulic pressure, these tools are very useful and greatly facilitate the operation. When these are not available, however, a very good arrangement for bending may be improvised, by securing a plank, 2 or 3 inches thick, in a nearly vertical position, through which a hole is bored slightly larger than the pipe. The pipe is placed in a hole, and using one end as a lever, the bends are worked in as required. A spruce plank is best for this purpose, because it is both soft and tough, at any rate, the plank should be of some soft wood which will collapse easily under pressure, forming a fillet around the edge of the hole, which will greatly reduce the tendency of the pipe to split, flatten or kink at the bend.

Much care is required to avoid flattening the section and splitting the pipe at the seam while bending. The best method is to make the bend uniformly throughout a considerable length of the pipe. In bending iron pipe, the seam or weld should always be in the center of the inside curve.

As there is danger of splitting pipes by bending, all pieces which have been bent should be tested before fitting up, as a split thus discovered will save both the labor of putting up and taking down.

BENDING BRASS AND COPPER PIPE.

Brass and copper pipe should be annealed before any attempt is made to bend it, this is done by heating it to a dull cherry red, where the bends are to be made, and plunging it into cold water, while hot, which softens the metal and makes the pipe bend much easier. The smaller sizes, up to 1 inch, may be bent cold, much in the same manner as iron pipe. Larger sizes, however, after annealing, should be filled with sand or melted rosin before bending, this prevents collapsing and kinking at the bends; when rosin is used, the pipe is reheated to melt and run it out after the bend is made.

No attempt should be made to bend nickel-plated pipe, because the plating will usually crack, bends should first be made, and the pipe plated afterwards.

In bending brazed pipe or tubing, the seam should always be kept on the inside of the bend, as the metal is more likely to break or split at this point, on account of the brazing being more brittle.

MAKING UP THE PIPE AND FITTINGS.

Before assembling pipes and fittings, each piece should be carefully examined for defects which will render it unfit for use, such as splits in the pipe or fittings, imperfect threads, sand holes in fittings, etc.

There is no remedy for splits or cracks in pipes or fittings, except to substitute new and perfect pieces; small sand holes in fittings may be repaired sometimes by peening or soldering, but if the hole is large, it should be drilled, tapped and a plug put in.

Before screwing the fittings on, the threads are usually painted with red lead or graphite paint, the former used on water pipes and the latter on steam, this is used as a cement to avoid slight leaks caused by imperfections in the threads, which are too small to be observed by ordinary inspection. It also acts as a lubricant, greatly reducing the force required to screw the joint up tight. The proper way to apply cement is to paint the first three threads of the fitting very thinly, and then paint the whole of the male thread, the object of this method is to prevent getting any of the paint inside the piping, where it will impart disagreeable odors to the water, or may lodge under a valve seat causing it to leak.

When convenient to do so, much time can be saved by making up work on the bench where the pipe may be held firmly in a vise. The short pieces of pipe can be screwed into the fittings by hand, and these serving as a lever, may be used to screw the fittings up tight on longer pieces, thus avoiding the use of a wrench on the fitting, which is always desirable.

In screwing on brass valves, having hexagon shoulders, a monkey wrench should be used, and always on the end into which the pipe is being screwed, to prevent getting these openings out of shape and springing the valve seat out of line. Stillson wrenches or pipe tongs should not be used on nickle-plated or brass pipe, because they will cut into the metal and spoil the appearance of the job; friction grip wrenches are provided for this purpose, and no other should be used.

Table 59.—Wrought Iron Pipe, Threads and Dimensions.

Inside diam., nomn'l.	Threads per inch.	Wt. per foot of length.	Thickness of metal.	Actual outside diam.	Actual inside diam.	Internal area.
⅛	27	.24	.068	.405	.27	.057
¼	18	.42	.088	.54	.364	.104
⅜	18	.56	.091	.675	.494	.191
½	14	.84	.109	.84	.623	.304
¾	14	1.12	.113	1.05	.824	.533
1	11½	1.68	.134	1.315	1.048	.862
1¼	11½	2.24	.140	1.66	1.38	1.496
1½	11½	2.68	.145	1.9	1.611	2.038
2	11½	3.61	.154	2.375	2.067	3.355
2½	8	5.74	.204	2.876	2.468	4.783
3	8	7.54	.217	3.5	3.067	7.388
3½	8	9.00	.226	4.0	3.548	9.887
4	8	10.66	.237	4.5	4.026	12.730
4½	8	12.40	.246	5.0	4.508	15.939
5	8	14.50	.259	5.563	5.045	19.990
6	8	18.76	.280	6.625	6.065	28.889
7	8	23.27	.301	7.625	7.023	38.737
8	8	28.18	.322	8.625	7.982	50.039
9	8	33.70	.344	9.625	8.937	63.633
10	8	40.00	.366	10.75	10.019	78.838

Table 60.—Sizes of Drills to be Used When Drilling for Pipe-Taps.

Inside diameter.	Threads per inch.	Tap-drill.
⅛	27	11/32
¼	18	7/16
⅜	18	29/64
½	14	37/64
¾	14	47/64
1	11½	1 3/16
1¼	11½	1 31/64
1½	11½	1 47/64
2	11½	2 3/16
2½	8	2 11/16
3	8	3 5/16
3½	8	3 13/16

Pipe Threads.

The threads on pipe are of the " V " type, and to insure tight fits the threaded parts are made tapering. The standard taper for the threaded portion of pipe is $\frac{1}{16}$ inch to the inch, or $\frac{3}{4}$ inch to the foot. The holes to be tapped for small sizes of pipe are usually drilled to the size of the bottom of the thread at the small end of the tap, and then the pipe-tap run down to the proper depth; but for the large work, a reamer having the same taper as the tap is run in to take out some of the stock. This reaming leaves the right amount of stock for threading, and saves unnecessary wear on the tap.

Table 61.—Standard Wrought Steam, Gas and Water Pipe.

Size of pipe.	Diameters.		Thickness.	Weight per feet.		No. of threads per inch of screw.
	External.	Internal.		Plain ends.	Threads and couplings.	
⅛	.405	.269	.068	.244	.245	27
¼	.540	.364	.088	.424	.425	18
⅜	.675	.493	.091	.567	.568	18
½	.840	.622	.109	.850	.852	14
¾	1.050	.824	.113	1.130	1.134	14
1	1.315	1.380	.140	2.272	2.281	11½
1¼	1.660	1.380	.140	2.272	2.281	11½
1½	1.900	1.610	.145	2.717	2.731	11½
2	2.375	2.067	.154	3.652	3.678	11½
2½	2.875	2.469	.203	5.793	5.819	8
3	3.500	3.068	.216	7.575	7.616	8
3½	4.000	3.548	.226	9.109	9.202	8
4	4.500	4.026	.237	10.790	10.889	8
4½	5.000	4.506	.247	12.538	12.642	8
5	5.563	5.047	.258	14.617	14.810	8
6	6.625	6.065	.280	18.974	19.185	8
7	7.625	7.023	.301	23.544	23.769	8
8	8.625	8.071	.277	24.696	25.000	8
8	8.625	7.981	.322	28.554	28.809	8
9	9.625	8.941	.342	33.907	34.188	8
10	10.750	10.192	.279	31.202	32.000	8
10	10.750	10.136	.307	34.240	35.000	8
10	10.750	10.020	.365	40.483	41.132	8
11	11.750	11.000	.375	45.557	46.247	8
12	12.750	12.090	.330	43.773	45.000	8
12	12.750	12.000	.375	49.562	50.706	8
13	14.000	13.250	.375	54.568	55.824	8
14	15.000	14.250	.375	58.573	60.375	8
15	16.000	15.250	.375	62.579	64.500	8

SEAMLESS BRASS PIPE

(Navy Department Specifications 44P1b—July 2, 1917.)

Material.—Pipe shall be made of material conforming in composition to the requirements of the table below:

TABLE 62.

Copper.	Tin.	Zinc.	Lead.	Iron.
Per cent.	*Max. per cent.*	*Per cent.*	*Max. per cent.*	*Max. per cent.*
59 to 68	1.5	41 to 32	3	0.1

Defects.—No cracks or seams shall be perceptible on the surface.

Hydraulic Tests.—Each pipe shall stand an internal hydraulic pressure which will subject the metal to a stress of 7000 pounds per square inch without showing weakness or defects, in accordance with the formula for thin, hollow cylinders under tension where $p=2ts/d$; p equals safe internal pressure; d equals inside diameter of the pipe in inches; s equals safe tensile strength of material, *i. e.*, 7000 pounds per square inch; t equals thickness of pipe in inches; but no pipe will be tested beyond 1000 pounds per square inch per gage unless specially directed.

Annealing.—All pipe shall be annealed sufficiently to prevent fire cracking. "Semi-annealed" pipe which is suitable for ordinary uses shall be delivered unless otherwise specified. When pipe is required for bending, note shall be made when ordering that it is to be "fully annealed."

NOTE.—Pipe will not be ordered harder than "semi-annealed."

Physical Tests.—When the pipe is finished (ready for shipment), the inspector will subject 1 per cent of the lot, taken at random, to the following tests:

(a) The end of each test pipe shall stand being flattened by hammering until the sides are brought parallel with a curve on

the inside at the ends not greater in diameter than twice the thickness of the metal in the pipe without showing cracks or flaws.

(b) Each test pipe shall have a piece 3 inches long cut from it, which piece when split shall stand opening out flat without showing cracks or flaws.

(c) Each test pipe shall stand threading in a satisfactory manner with the thread for the size pipe as required.

(NOTE.—These (a), (b), and (c) tests shall be made on all test pipes, and test specimens shall be furnished at the contractor's expense. If any of these pipes selected for tests fail, the inspector will select two extra pipes from the same lot and put them through the same test as the pipe that failed, and both of these pipes must be found satisfactory in order that the lot may be passed. The failure to pass satisfactorily any one of the tests marked (a), (b), (c) will reject the lot.)

(d) Fully annealed pipe shall stand bending 180° around a diameter of one and one-half times the inside diameter of the pipe. This test shall be in addition to (a), (b) and (c).

Thickness, Weight and Marking.—Each large, single pipe or bundle of small pipes shall be marked with the name of the vessel for which it is intended or with the number of the order. The standard weight for seamless-drawn brass pipe will be 0.307 pound per cubic inch of material. No excess weight on the entire lot will be paid for; no single piece that exceeds the calculated weight by more than 5 per cent will be accepted. The tolerance for underweight and undergage will be 5 per cent for piping up to and including 6 inches; 7 per cent for piping from 6 inches to and including 8 inches, and 8 per cent above 8 inches.

Threads.—The ends of the pipe shall not be threaded unless so ordered. When ordered to be threaded, the thread shall be in accordance with the latest issue of Navy Department specifications for "standard pipe threads for pipe and pipe fittings."

Table 63.—Dimensions.

Size of pipe.	Diameter. Actual outside.	Diameter. Actual inside.	Thickness.	Circumference. Outside.	Circumference. Inside.	Transverse areas. Outside.	Transverse areas. Inside.	Transverse areas. Metal.	Nominal weight per foot, in pounds.	Threads per inch.
⅛	.405	.281	.0620	1.272	.883	.129	.062	.0668	.246	27
¼	.540	.375	.0825	1.696	1.178	.229	.110	.119	.437	18
⅜	.675	.494	.0905	2.121	1.552	.358	.192	.166	.612	18
½	.840	.625	.1075	2.639	1.964	.554	.307	.247	.911	14
¾	1.050	.822	.1140	3.299	2.582	.866	.531	.335	1.24	14
1	1.315	1.062	.1265	4.131	3.336	1.358	.886	.472	1.74	11½
1¼	1.660	1.368	.1460	5.215	4.298	2.164	1.470	.694	2.56	11½
1½	1.900	1.600	.1500	5.969	5.027	2.835	2.011	.825	3.04	11½
2	2.375	2.062	.1565	7.461	6.478	4.430	3.339	1.091	4.02	11½
2½	2.875	2.500	.1875	9.032	7.854	6.492	4.909	1.583	5.83	8
3	3.500	3.062	.2190	10.996	9.620	9.621	7.364	2.257	8.32	8
3½	4.000	3.500	.2500	12.566	10.996	12.566	9.621	2.945	10.85	8
4	4.500	4.000	.2500	14.137	12.566	15.904	12.566	3.338	12.30	8
4½	5.000	4.500	.2500	15.708	14.137	19.635	15.904	3.731	13.74	8
5	5.563	5.062	.2505	17.477	15.903	24.306	20.125	4.181	15.40	8
6	6.625	6.125	.2500	20.813	19.242	34.472	29.465	4.007	18.45	8
7	7.625	7.062	.2815	23.955	22.186	45.664	39.160	6.494	23.92	8
8	8.625	8.000	.3125	27.096	25.133	58.426	50.266	8.160	30.06	8
9	9.625	8.937	.3440	30.238	28.076	72.760	62.730	10.030	37.95	8
10	10.750	10.019	.3655	33.772	31.476	90.763	78.839	11.924	43.93	8

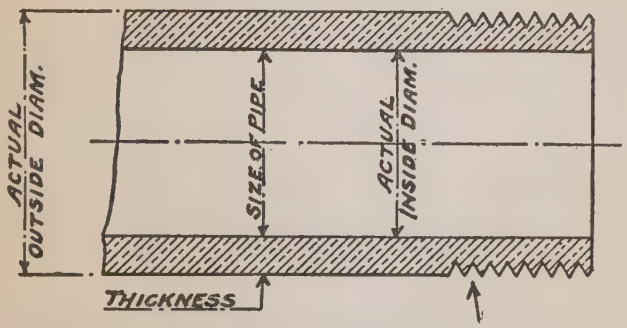

Threaded According to Table of Standard Pipe Thread.

FIG. 78.—Pipe, Seamless Brass. (Corresponding in Size to Standard Weight Pipe.)

WELDED STEEL PIPE.

(Standard Stock Catalog Designation: Pipe, Steel (Welded).)

(Navy Department Specifications 44P10a—March 1, 1917.)

Grades.—There shall be three grades of pipe, known as standard, extra strong, and double extra strong, which shall conform to the requirements of the respective tables.

Purpose.—Standard weight pipe is suitable for use with fresh water, and other systems using screwed fittings for working pressures of 150 pounds and under, and for berth and canopy frames, railings, bag racks, etc.

Extra strong pipe is suitable for deck, awning and rail stanchions.

Double extra strong pipe is suitable for deck stanchions, where extra strength is required.

Material.—Pipe shall be of the best commercial quality of soft weldable steel made by the Bessemer or other approved process.

Welding.—All pipe 3 inches or under in nominal diameter may be butt welded, unless otherwise specified. All pipe over 3 inches in nominal diameter shall be lap welded.

Finish.—Pipe shall be free from rust, injurious sand marks, cracks, laminations, imperfect welds or any defects which would affect its strength or serviceability. Ordinary liquor marks incident to manufacture of welded material shall not be considered cause for rejection.

Tensile Properties.—The material shall conform to the following minimum requirements as to tensile properties:

Table 64.

Material.	Tensile strength per square inch.	Yield point per square inch.	Elongation in 8 inches.
	Pounds.	*Pounds.*	*Per cent.*
Steel	50,000	30,000	18

TESTS.

Hydrostatic Tests.—Each pipe shall be tested at the mill to an internal hydrostatic pressure not less than that indicated in these specifications. Any pipe which shows an indication of being defective after subjection to the above test will be rejected. Tests will be made in the presence of a government inspector unless inspection is waived, in which case the manufacturer must furnish a certificate to the effect that the pipe has withstood satisfactorily the hydrostatic test required.

Flattening Tests for Pipe over 3 Inches in Diameter.—A section of pipe 6 inches in length shall be flattened cold until the outer walls are brought together to one-third of the original outside diameter without developing cracks in the metal or opening the weld. The weld shall in this test be 45° from the point of maximum bend. This test will not be required on double extra strong pipe.

Bend Test for Pipe 3 Inches and Less in Diameter.—For pipe 3 inches and smaller a sufficient length of pipe shall bend cold through 90° around a mandrel the diameter of which is 18 times the diameter of the pipe, without developing cracks in any portion and without opening the weld.

Tensile Test Pieces.—Tensile specimens shall consist of longitudinal pieces cut from pipe and machined to shape, or tensile tests may be made on full-size pipe if so desired.

Number of Tests.—A sufficient number of the flattening, tensile and bend tests shall be made to show the inspector that the pipe is of the material and quality required. The number of tests shall not be more than that indicated below:

(a) One test of each kind from each 100 lengths of pipe 3 inches or less in diameter.

(b) One test of each kind from each 50 lengths of pipe over 3 inches and not over 6 inches in diameter.

(c) One test of each kind from each 25 lengths of pipe over 6 inches and not over 9 inches in diameter.

(d) One test of each kind from each 10 lengths of pipe over 9 inches.

Galvanizing.—When specified, pipes will be galvanized, which must be done by the hot process, both inside and outside. They must be thoroughly and evenly galvanized and of bright appearance, free from blisters and other defects. The increase in weight due to galvanizing shall not be less than one-eighth pound per square foot of surface covered. The fluid zinc-coating metal must not contain more than 2 per cent of impurities, as determined from samples taken at a point about half the depth of the bath. If impracticable to obtain samples from the bath, the weight per foot and quality of zinc coating may be determined from the average of samples 6 inches long taken from both ends of finished pipe. Unless galvanizing is specified on the order, black pipe will be furnished.

Threading and Couplings.—Standard grade pipe shall, unless otherwise specified, be threaded at both ends and shall have a standard coupling of wrought iron or steel pipe tightly screwed on one end.

Extra strong and double extra strong pipe shall, unless otherwise specified, be furnished with plain ends and without couplings.

Threads.—All threads shall be in accordance with the Briggs standard threads for pipe, as given in specifications for "Standard Pipe Threads for Pipe and Pipe Fittings," issued by the Navy Department, in effect at date of opening of bids.

Tolerance.—The diameter must be such that the standard thread will be cut without an appreciable shoulder.

The weight of black pipe shall not vary more than 5 per cent over or under that specified in tables.

The weight of galvanized pipe shall not vary more than 3 per cent under or 8 per cent over that specified in tables.

Lengths.—Unless exact lengths are specified, pipe shall be furnished in commercial lengths of from 16 to 22 feet for standard grade pipe and 12 to 22 feet for extra strong and double strong pipe. Jointers will not be accepted.

Thread Protectors.—All pipe which is received with threads materially damaged will be rejected at destination. Previous

to shipment all threaded ends of pipe 4 inches or larger in diameter shall be fitted with adequate thread protectors.

Note for General Storekeepers.—Owing to prevailing practice at navy yards of using the term "iron pipe" to apply to all pipe whether of iron or steel, supply officers will fill stubs, requests or requisitions calling for iron pipe from the stock purchased under these specifications.

As pipe between 2 inches and 3 inches in diameter is made by both the lap-welding and butt-welding process, if either is specifically desired the requisition should so state, otherwise either lap-welded or butt-welded pipe between these sizes will be acceptable.

Pipe under these specifications should be ordered by length. In the case of pipe furnished with couplings, the length includes the coupling when tightly screwed on the pipe.

Table 65.—Dimensions for Standard Weight Pipe.*

Diameter.			Thickness.	Weight per foot in pounds.		Test pressure in pounds.
Size of pipe.	Actual outside.	Actual inside.		Plain ends.	Ends threaded and coupling on one end.	Minimum internal hydrostatic.†
⅛	.405	.269	.068	.244	.245	700
¼	.540	.364	.088	.424	.425	700
⅜	.675	.493	.091	.567	.568	700
½	.840	.622	.109	.850	.852	700
¾	1.050	.824	.113	1.130	1.134	700
1	1.315	1.049	.133	1.678	1.684	700
1¼	1.660	1.380	.140	2.272	2.281	700
1½	1.900	1.610	.145	2.717	2.731	700
2	2.375	2.067	.154	3.652	3.678	700
2½	2.875	2.469	.203	5.793	5.819	800
3	3.500	3.068	.216	7.575	7.616	800
3½	4.000	3.548	.226	9.109	9.202	1,000
4	4.500	4.026	.237	10.790	10.889	1,000
4½	5.000	4.506	.247	12.538	12.642	1,000
5	5.563	5.047	.258	14.617	14.810	1,000
6	6.625	6.065	.280	18.974	19.185	1,000
7	7.625	7.023	.301	23.544	23.769	1,000
8	8.625	7.981	.322	28.554	28.809	1,000
9	9.625	8.941	.342	33.907	34.188	900
10	10.750	10.020	.365	40.483	41.132	900
11	11.750	11.000	.375	45.557	46.247	800
12	12.750	12.000	.375	49.562	50.706	800

* All weights and dimensions are nominal.

† Pipe 1¼ to 3 inches, inclusive, in sizes, if lap welded, must be tested to 1,000 pounds pressure.

Table 66.—Dimensions of Standard Extra Strong Pipe.*

Size of pipe.	Diameter. Actual outside.	Diameter. Actual inside.	Thickness.	Circumference. Outside.	Circumference. Inside.	Transverse areas. Outside.	Transverse areas. Inside.	Transverse areas. Metal.	Nominal weight, per foot in pounds, plain end.	Test pressure in pounds. Butt weld.	Test pressure in pounds. Lap weld.
⅛	.405	.215	.095	1.272	.675	.129	.036	.093	.314	†700	.....
¼	.540	.302	.119	1.696	.949	.229	.072	.157	.535	†700	.....
⅜	.675	.423	.126	2.121	1.329	.358	.141	.217	.738	†700	.....
½	.840	.546	.147	2.639	1.715	.554	.234	.320	1.087	†700	.....
¾	1.050	.742	.154	3.299	2.331	.866	.433	.433	1.473	†700	.....
1	1.315	.957	.179	4.131	3.007	1.358	.719	.639	2.171	†700	.....
1¼	1.660	1.278	.191	5.215	4.015	2.164	1.283	.881	2.996	1,500	2,500
1½	1.900	1.500	.200	5.969	4.712	2.835	1.767	1.068	3.631	1,500	2,500
2	2.375	1.939	.218	7.461	6.092	4.430	2.953	1.477	5.022	1,500	2,500
2½	2.875	2.323	.276	9.032	7.298	6.492	4.238	2.254	7.661	1,500	2,000
3	3.500	2.900	.300	10.996	9.111	9.621	6.605	3.016	10.252	1,500	2,000
3½	4.000	3.364	.318	12.566	10.568	12.566	8.888	3.678	12.505	.....	2,000
4	4.500	3.826	.337	14.137	12.020	15.904	11.497	4.407	14.893	.....	2,000
4½	5.000	4.290	.355	15.708	13.477	19.635	14.455	5.180	17.611	.....	1,800
5	5.563	4.813	.375	17.477	15.120	24.306	18.194	6.112	20.778	.....	1,800
6	6.625	5.761	.432	20.813	18.099	34.472	26.067	8.405	28.573	.....	1,800
7	7.625	6.625	.500	23.955	20.813	45.664	34.472	11.192	38.048	.....	1,500
8	8.625	7.625	.500	27.096	23.955	58 426	45.663	12.763	43.388	.....	1,500
9	9.625	8.625	.500	30.238	27.096	72.760	58.426	14.334	48.728	.....	1,500
10	10.750	9.750	.500	33.772	30.631	90.763	74.662	16.101	54.735	.....	1,200
11	11.750	10.750	.500	36.914	33.772	108.434	90.763	17.671	60.075	.....	1,100
12	12.750	11.750	.500	40.055	36.914	127.676	108.434	19.242	65.415	.....	1,100

Table 67.—Dimensions of Standard Double Extra Strong Pipe.*

½	.840	.252	.294	2.639	.792	.554	.050	.504	1.714	†700	.....
¾	1.050	.434	.308	3.299	1.363	.866	.148	.718	2.440	†700	.....
1	1.315	.599	.358	4.131	1.882	1.358	.282	1.076	3.659	†700	.....
1¼	1.660	.896	.382	5.215	2.815	2.164	.630	1.534	5.214	2,200	.....
1½	1.900	1.100	.400	5.969	3.456	2.835	.950	1.885	6.408	2,200	3,000
2	2.375	1.503	.436	7.461	4.722	4.430	1.774	2.656	9.029	2,200	3,000
2½	2.875	1.771	.552	9.032	5.564	6.492	2.464	4.028	13.695	2,200	3,000
3	3.500	2.300	.600	10.996	7.226	9.621	4.155	5.466	18.583	.....	3,000
3½	4.000	2.728	.636	12.566	8.570	12.566	5.845	6.721	22.850	.....	2,500
4	4.500	3.152	.674	14.137	9.902	15.904	7.803	8.101	27.541	.....	2,500
4½	5.000	3.580	.710	15.708	11.247	19.635	10.066	9.569	32.530	.....	2,000
5	5.563	4.063	.750	17.477	12.764	24.306	12.966	11.340	38.552	.....	2,000
6	6.625	4.897	.864	20.813	15.384	34.472	18.835	15.637	53.160	.....	2,000
7	7.625	5.875	.875	23.955	18.457	45.664	27.109	18.555	63.079	.....	2,000
8	8.625	6.875	.875	27.096	21.598	58.426	37.122	21.304	72.424	.....	2,000

* All weights and dimensions are nominal.
† Pipe to be jarred with a hammer while under pressure.

LOW-PRESSURE COMPOSITION FITTINGS.

(Standard Stock Catalog designation: Fittings, steam and water, composition, low pressure.)

(Navy Department Specifications 45F2c—May 1, 1917.)

Purpose.—To be used for gas, air and water systems when the working pressure does not exceed 150 pounds, and for steam, steam heating and exhaust steam when the working pressure does not exceed 100 pounds per square inch.

Material.—The composition fittings shall be of material in accordance with the latest edition of Navy Department specifications for screw pipe-fitting brass castings, composition S-c. Alternative bids will be considered, however, on material of other chemical composition, but in such alternative bids the composition shall be clearly stated, with the percentage range of variation for each element. One fitting shall be taken at random from each lot of the same size for chemical analyses, to determine conformity with composition S-c, or with the substitute composition on the basis of which the contract was awarded.

Workmanship.—Composition fittings shall be s o u n d, smoothly cored, true to form, and uniform in thickness and strength, and free from cold shuts, injurious blowholes, porosity or other defects which may affect their serviceability. Fittings to be thoroughly cleaned of sand and scale by the acid bath process (or its equivalent) and all fins and roughness to be removed. Fittings to be finished inside and outside in a workmanlike manner.

Threading.—Fittings to be tapped to receive the threaded ends of pipe and to be ordered by the size of pipe they are to fit. Threads shall be sharp and clean and shall be in accordance with the latest issue of Navy Department specifications for standard pipe threads for pipe and pipe fittings. Tappings shall be concentric and threads shall not cut the walls of the fittings.

Tests.—Representative samples shall be selected from every twenty (20) of the same kind and size delivered and subjected

to a hydrostatic pressure of 250 pounds per square inch for one minute. If under this test the fitting shows signs of moisture on the external surface or indications of weakness or defects, the lot from which it was selected shall be rejected.

Dimensions.—Fittings shall be in accordance with the plans and tables incorporated in and forming part of these specifications. Reducing fittings shall be in accordance with the dimensions for non-reducing fittings for the various sizes of pipes they are to fit.

Tolerance.—Variations in dimensions will be allowed as indicated in the tables.

Packing.—(a) Ten fittings of the same kind and size up to and including 1 inch shall be securely tied together or be packed in a suitable container.

(b) Five fittings of the same kind and size above 1 inch shall be securely tied together or be packed in a suitable container.

Note.—In ordering reducing fittings the type of fitting and the dimensions should be given.

In specifying tees the run should be given first, then the outlet, thus:

Reducing Screw Fittings—Method of Stating Sizes.

Tees reducing on outlets thus:

Are read: 1½″x 1½″x 1″.

Tees reducing on run thus:

Are read: 1½″x 1¼″x 1″.

Tees with both ends of run the same size, with outlet larger, thus:

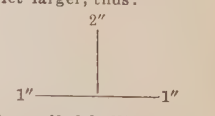

Are called bullhead tees and are read: 1″x 1″x 2″.

Reducing crosses are read thus:

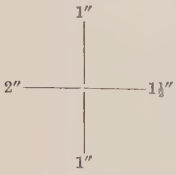

2″x 1¼″x 1″x 1″.

2″x 2 x1½″x 1¼″.

2″x 2″x 1¼″x 1¼″.

Table 68.—Dimensions.

Pipe dimensions.		Body dimensions of fittings, in inches.									
		For all fittings.				Center to face.				Face to face.	
Nominal inside diameter of pipe.	Number of threads per inch.	Minimum thickness of body.	Diameter of bead.		Minimum length of thread.	90° ell, tee, and cross.		45° ell.		45° Y.	
A	B	C	D	Allowance (±).	E	F	Allowance (±).	G	Allowance (±).	H	Allowance (+).
⅛	27	.081	.700	.0625	.281	.582	.0625	.468	.0625	1.550	.125
¼	18	.089	.861	.0625	.335	.706	.0625	.552	.0625	1.987	.125
⅜	18	.100	1.015	.0625	.380	.832	.0625	.676	.0625	2.202	.125
½	14	.110	1.202	.0625	.445	.964	.125	.739	.125	2.510	.125
¾	14	.128	1.470	.125	.500	1.131	.125	.895	.125	2.903	.250
1	11½	.128	1.785	.125	.520	1.355	.125	1.041	.125	3.345	.250
1¼	11½	.133	2.182	.125	.604	1.592	.125	1.166	.125	3.903	.250
1½	11½	.145	2.452	.125	.656	1.791	.125	1.322	.125	4.525	.250
2	11½	.156	3.020	.125	.765	2.123	.125	1.499	.125	5.209	.250
2½	8	.179	3.543	.125	.822	2.531	.125	1.760	.125	6.081	.250
3	8	.208	4.228	.125	.875	3.050	.125	2.083	.125	7.000	.250
3½	8	.257	4.903	.125	.937	3.323	.125	2.187	.125	7.830	.250
4	8	.260	5.274	.125	1.025	3.626	.125	2.437	.125	8.740	.250

Table 69.—Reducing Screw Fittings. Showing Sizes to Which Fittings Reduce.

Size.	Ells.	Tees.			Crosses.
	Reduces to all sizes down to—	Reduces on outlet to all sizes down to—	Reduces on run to all sizes down to—	Bullhead, enlarge to all sizes up to—	Reduce on outlets to all sizes down to—
In.	*In.*	*In.*	*In.*	*In.*	*In.*
$\frac{3}{8}$	..	..	..	$\frac{1}{2}$	..
$\frac{1}{2}$	$\frac{3}{8}$	$\frac{3}{8}$	$\frac{3}{8}$	1	$\frac{1}{4}$
$\frac{3}{4}$	$\frac{1}{2}$	$\frac{1}{2}$	$\frac{1}{2}$	2	$\frac{3}{8}$
1	$\frac{3}{4}$	$\frac{3}{4}$	$\frac{3}{4}$	2	$\frac{1}{2}$
$1\frac{1}{4}$	1	1	1	2	$\frac{3}{4}$
$1\frac{1}{2}$	$1\frac{1}{4}$	$1\frac{1}{4}$	$1\frac{1}{4}$	$2\frac{1}{2}$	1
2	$1\frac{1}{2}$	$1\frac{1}{2}$	$1\frac{1}{2}$	3	$1\frac{1}{4}$
$2\frac{1}{2}$	2	2	2	4	$1\frac{1}{2}$
3	2	2	2	4	2
$3\frac{1}{2}$	3	1	1	4	2
4	2	$\frac{3}{4}$	$\frac{3}{4}$	6	2
$4\frac{1}{2}$	4	2	..	..	..
5	3	$1\frac{1}{2}$	2	6	2
6	4	2	$2\frac{1}{2}$	8	2

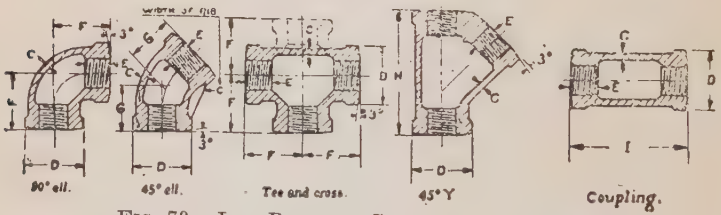

FIG. 79.—Low-Pressure Composition Fittings.

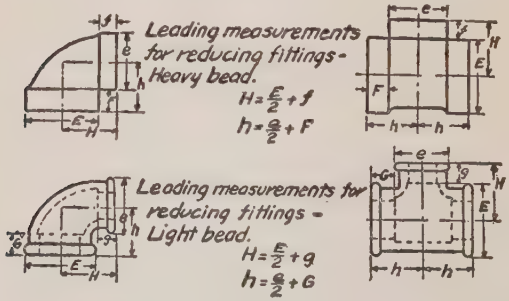
Leading measurements for reducing fittings - Heavy bead.
H = E/2 + f
h = g/2 + F
Leading measurements for reducing fittings - Light bead.
H = E/2 + g
h = g/2 + G

FIG. 80.—Reducing Screw Fittings Formulæ.

Reducing fittings are to be made in accordance with the above formulæ.

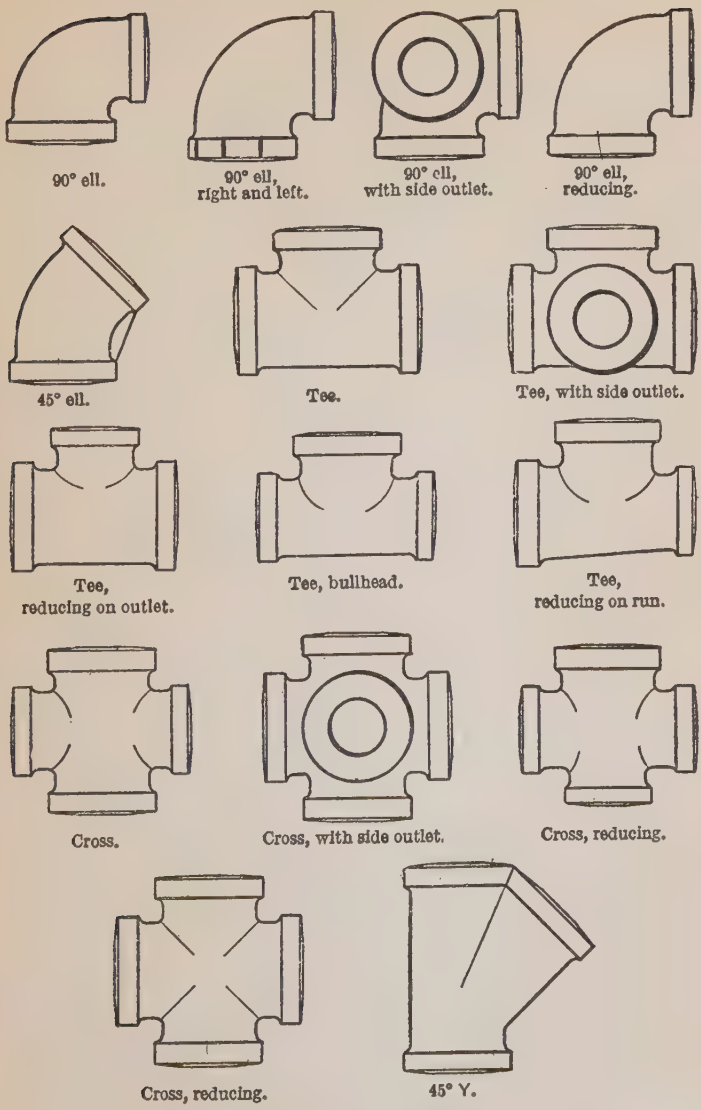
90° ell.
90° ell, right and left.
90° ell, with side outlet.
90° ell, reducing.
45° ell.
Tee.
Tee, with side outlet.
Tee, reducing on outlet.
Tee, bullhead.
Tee, reducing on run.
Cross.
Cross, with side outlet.
Cross, reducing.
Cross, reducing.
45° Y.

FIG. 81.

CAST-IRON PIPE FITTINGS.

(Standard Stock Catalog Designation: Pipe-fittings, iron (cast).)
(Navy Department Specifications 44F3b—November 1, 1916.)

General.—To be made of high-grade material, of good workmanship, and to be free from any defects which may affect the serviceability of the fitting.

Quality.—To be made of a high grade of cast iron of such character as shall make the metal of the castings strong, tough and of even grain.

Defects and Finish.—To be sound, smoothly cored, true to form, free from cold shuts, injurious blowholes and porosity, and to be thoroughly cleaned of sand, scale and all irregularities. To present a surface as smooth as the finish produced by acid process.

Shapes and Dimensions.—Fittings to be in accordance with tables and plans incorporated in and forming part of these specifications. Variations in the dimensions given will be allowed as indicated in the tables.

Threading.—The fittings shall be tapped to receive the threaded ends of pipe and shall be ordered by the size of pipe they fit. The threads shall be sharp, clean and continuous and in accordance with the table for standard threads for pipe as contained in the latest issue of Navy Department "Specifications for Standard Threads for Pipe and Pipe Fittings." The threads shall not cut the walls of the fittings.

Reducing Fittings.—Reducing fittings shall be in accordance with the dimensions given for non-reducing fittings for the various sizes of pipe they fit, except the center to face dimensions, which shall conform to the best commercial practice.

Galvanized Fittings.—When galvanized fittings are specified, the fittings which conform to these specifications and have been subjected to the hot galvanizing process shall be furnished. They shall be thoroughly coated with a smooth, bright, solid surface of zinc, free from dirt, bare spots and rust.

Table 70.—Dimensions.

Pipe dimensions.		Body dimensions of fittings, in inches.						
		For all fittings.			Center to face.		Face to face.	
Nominal inside diameter of pipe.	Number of threads per inch.	Minimum thickness of body.	Diameter of bead. ±⅛ inch up to 3 inches ±¼ inch-3 inches up; allowance.	Minimum length of thread.	90° ell, tee, and cross. ±3/16 inch to 2 inches ±¼ inch-2 inches up; allowance.	45° ell. ±3/16 inch to 2 inches ±¼ inch-2 inches up; allowance.	45° Y. ±½ inch to 2 inches ±½ inch-2 inches up; allowance.	Couplings. ±½ inch to 2 inches ±½ inch-2 inches up; allowance.
Inches.								
⅛	27	.090	.875	.250	.750	.750		
¼	18	.120	1.000	.250	.875	.625	2.125	
⅜	18	.125	1.255	.375	1.000	.750	2.250	2.250
½	14	.140	1.375	.430	1.250	.875	2.500	2.250
¾	14	.155	1.750	.440	1.375	.875	3.000	2.250
1	11½	.170	2.000	.500	1.500	1.000	3.500	2.500
1¼	11½	.185	2.500	.560	1.750	1.250	4.000	2.750
1½	11½	.200	2.875	.690	1.875	1.375	5.000	3.000
2	11½	.220	3.375	.690	2.250	1.625	5.750	3.500
2½	8	.240	4.000	.875	2.625	1.875	6.500	3.500
3	8	.260	4.875	.875	3.125	2.125	7.750	3.500
3½	8	.280	5.375	.875	3.500	2.250	8.875	4.000
4	8	.315	5.875	1.000	3.875	2.500	9.750	4.500

Tests.—(a) One fitting shall be selected for test from every two dozen of the same size and kind delivered, and subjected to a hydrostatic pressure test of 350 pounds per square inch for one minute. Under this test the fittings shall show no signs of sweating or any other weakness or defect.

(b) The fittings shall then be subjected to a hammer test or other test to determine the ability of the metal to resist shocks. It shall also be screwed on a pipe threaded to a large gage. The ability to resist bursting under this test will be taken as an indication of the quality of the metal.

Purpose.—For use on steam and hot liquid systems where the working pressure does not exceed 120 pounds or the total temperature does not exceed 350° F., and for use on cold liquid systems where the pressure does not exceed 175 pounds per square inch. They may also be used, under special authority, on temporary construction, for pressures which do not exceed 200 pounds per square inch or a temperature exceeding 400° F.

PIPE FITTINGS, IRON (MALLEABLE).

(Navy Department Specifications 44F5a—July 1, 1916.)

Purpose.—For use on oil-filling, oil-fuel, gas, air and fresh-water systems when the working pressure does not exceed 150 pounds, and for steam, steam heating and exhaust steam systems, when the working pressure does not exceed 100 pounds per square inch.

Material.—Fittings shall be of a high grade of malleable iron which has been thoroughly annealed.

Workmanship.—Fittings shall be sound, smoothly cored, true to form and uniform in thickness and strength. They shall be free from cold shuts, injurious blow holes, porosity or other defects affecting their serviceability. They shall be thoroughly cleaned of sand, scale and all irregularities, and shall present a surface as smooth as that produced by pickling and tumbling.

Threading.—Fittings shall be tapped to receive the threaded ends of pipe, and shall be ordered by the size of pipe they are to fit. Threads shall be sharp and clean and shall be in accordance with the latest issue of Navy Department specifications for "Standard Pipe Threads for Pipe and Pipe Fittings." Tappings for pipes shall be concentric and threads shall not cut the walls of fittings.

Galvanizing.—Fittings shall be either black or galvanized, as specified in the order. Galvanizing shall be by the hot process, and fittings so treated shall be thoroughly coated with a smooth, bright, solid surface of zinc, free from dross, dirt, bare spots and rust.

Tests.—One fitting, or more at the option of the inspector, may be selected from every 20 of the same kind and size delivered and subjected to a hydrostatic pressure of 300 pounds per square inch for one minute. If, under this test, the fitting shows signs of moisture on the external surface or indications of weakness or defects, the lot from which it was selected shall be rejected.

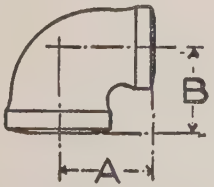

FIG. 82.—Center to Face Dimensions for 90° Reducing Ells.

Table 71.

Size.	Reduced outlet.	A	B	Plus or minus allowances in A and B	Size.	Reduced outlet.	A	B	Plus or minus allowances in A and B.
In.	*In.*	*In.*	*In.*	*In.*	*In.*	*In.*	*In.*	*In.*	*In.*
½	⅜	.78	.76	⅛	1¼	¾	1.73	1.51	⅛
⅜	½	.88	.84	⅛	1½	1	1.79	1.64	⅛
½	⅜	1.01	.96	⅛	1½	1¼	1.88	1.83	⅛
¾	½	1.19	1.08	⅛	2	1¼	2.08	1.91	⅛
¾	¾	1.22	1.17	⅛	2	1½	2.15	2.03	¼
1	¾	1.36	1.24	⅛	2½	2	2.57	2.44	¼
1	1	1.42	1.35	⅛	3	2½	3.07	2.84	¼
1¼	1	1.59	1.42	⅛	3½	3	3.50	3.28	¼
1¼	1	1.65	1.55	⅛	4	3½	3.84	3.64	¼

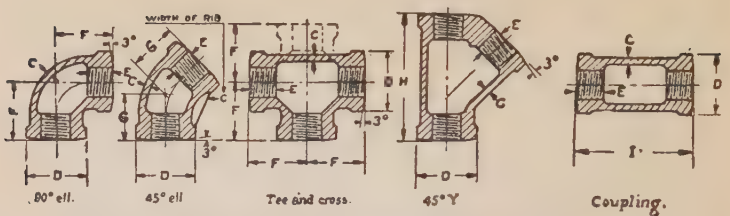

FIG. 83.—Malleable-Iron Fittings, Black or Galvanized.

Table 72.

Pipe dimensions.		Body dimensions of fittings (in inches).											
		For all fittings.				Center to face.				Face to face.			
Nominal inside diameter of pipe (inch.).	Number of threads per inch.	Minimum thickness of body.	Diameter of bead.	Allowance ±	Minimum length of thread.	90° ell, tee, and cross.	Allowance ±	45° ell.	Allowance ±	45° Y.	Allowance ±	Coupling.	Allowance ±
A	B	C	D		E	F		G		H		I	
⅛	27	.090	.70	.0625	.25	.68	.0625	.56	.0625	1.50	.125	....	.125
¼	18	.090	.84	.0625	.31	.75	.0625	.67	.0625	2.00	.125	1.10	.125
⅜	18	.100	1.00	.0625	.37	.87	.0625	.75	.0625	2.25	.125	1.25	.125
½	14	.100	1.25	.0625	.39	1.00	.125	.83	.125	2.40	.125	1.40	.125
¾	14	.120	1.50	.125	.43	1.25	.125	.94	.125	2.87	.250	1.52	.250
1	11½	.130	1.75	.125	.50	1.43	.125	1.12	.125	3.25	.250	1.80	.250
1¼	11½	.145	2.18	.125	.62	1.75	.125	1.25	.125	4.32	.250	2.08	.250
1½	11½	.155	2.50	.125	.62	1.87	.125	1.44	.125	4.50	.250	2.33	.250
2	11½	.180	3.00	.225	.75	2.21	.125	1.59	.125	5.75	.250	2.67	.250
2½	8	.200	3.50	.125	.87	2.65	.125	1.95	.125	6.12	.250	2.96	.250
3	8	.230	4.25	.125	1.00	3.00	.125	2.12	.125	7.25	.250	3.40	.250
3½	8	.250	4.75	.125	1.06	3.50	.125	2.32	.125	8.12	.250	3.75	.250
4	8	.280	5.43	.125	1.12	3.87	.125	2.68	.125	9.00	.250	4.00	.250

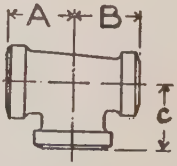

FIG. 84.—Center to Face Dimensions for Reducing Tees.

Table 73.

Size.	Reducing to—	A	B	C	Plus or minus allowances in A, B, and C.
¼-inch.....	¼ by ¼ by ⅛	.76	.76	.78	⅛
	¼ by ¼ by ⅜	.88	.88	.84	
⅜-inch.....	⅜ by ⅜ by ¼	.84	.84	.88	⅛
	⅜ by ⅜ by ½	1.01	1.01	.96	
½-inch.....	½ by ½ by ⅜	.96	.96	1.01	⅛
	½ by ⅜ by ½	1.04	1.01	1.04	
	½ by ⅜ by ⅜	.96	.92	1.01	
	½ by ½ by ¾	1.22	1.22	1.17	
¾-inch.....	¾ by ¾ by ⅜	1.08	1.08	1.19	⅛
	¾ by ¾ by ½	1.17	1.17	1.22	
	¾ by ½ by ¼	1.00	.88	1.15	
	¾ by ½ by ½	1.17	1.04	1.22	
	¾ by ½ by ¾	1.28	1.22	1.28	
	¾ by ¾ by ¾	1.28	1.19	1.28	
	¾ by ¼ by ⅜	1.08	.96	1.19	
	¾ by ¾ by 1	1.42	1.42	1.35	
1-inch.....	1 by ½ by ½	1.24	1.04	1.36	⅛
	1 by ¾ by ½	1.24	1.17	1.36	
	1 by ¾ by ¾	1.35	1.28	1.42	
	1 by ⅜ by ¾	1.35	1.19	1.42	
	1 by ⅜ by 1	1.48	1.33	1.48	
	1 by ¾ by 1	1.48	1.42	1.48	
	1 by 1 by ¾	1.35	1.35	1.42	
	1 by 1 by ½	1.24	1.24	1.36	
	1 by 1 by ⅜	1.15	1.15	1.33	
	1 by 1 by 1½	1.65	1.65	1.55	
	1 by 1 by 1½	1.79	1.79	1.64	
1¼-inch.....	1¼ by 1 by 1	1.55	1.48	1.65	⅛
	1¼ by 1 by ¾	1.22	1.15	1.50	
	1¼ by 1 by ¼	1.42	1.35	1.59	
	1¼ by ¾ by 1	1.55	1.42	1.65	
	1¼ by ¾ by ¾	1.42	1.28	1.59	
	1¼ by 1¼ by ½	1.30	1.30	1.53	
	1¼ by 1¼ by ¼	1.42	1.42	1.59	
	1¼ by 1¼ by ⅜	1.22	1.22	1.50	
	1¼ by 1¼ by 1	1.55	1.55	1.65	
	1¼ by 1 by 1½	1.74	1.65	1.74	
	1¼ by ¾ by 1½	1.74	1.59	1.74	
	1¼ by ⅜ by 1¼	1.74	1.50	1.74	
	1¼ by 1¼ by 1½	1.88	1.88	1.83	

Table 73.—Continued.

Size.	Reducing to—	A	B	C	Plus or minus allowances in A, B, and C.
1½-inch....	1½ by 1 by 1	1.64	1.48	1.79	
	1½ by 1 by 1½	1.95	1.79	1.95	
	1½ by 1½ by ¾	1.39	1.39	1.67	
	1½ by 1½ by ¾	1.51	1.51	1.73	
	1½ by ¾ by 1½	1.95	1.73	1.95	
	1½ by 1¼ by 1½	1.95	1.88	1.95	1/32
	1½ by 1¼ by 1¼	1.83	1.74	1.88	
	1½ by 1½ by 1¼	1.83	1.83	1.88	
	1½ by 1½ by 1	1.64	1.64	1.79	
	1½ by 1¼ by 1	1.64	1.55	1.79	
	1½ by 1½ by 2	2.15	2.15	2.03	
2-inch....	2 by ¾ by 2	2.28	1.93	2.28	
	2 by 1½ by 2	2.28	2.08	2.28	
	2 by 1½ by 2	2.28	2.15	2.28	
	2 by 2 by 1	1.72	1.72	1.99	
	2 by 2 by 1¼	1.91	1.91	2.08	
	2 by 2 by 1½	2.03	2.03	2.15	
	2 by 2 by ¾	1.59	1.59	1.93	1/16
	2 by 2 by ½	1.47	1.47	1.87	
	2 by 1½ by 1¼	1.91	1.83	2.08	
	2 by 2 by 3	2.95	2.95	2.59	
	2 by 1½ by 1½	2.03	1.95	2.15	
	2 by 2 by 2½	2.57	2.57	2.44	
2½-inch....	2½ by 2½ by ¾	1.75	1.75	2.22	
	2½ by 2½ by 1	1.88	1.88	2.28	
	2½ by 2½ by 1¼	2.07	2.07	2.37	
	2½ by 2½ by 1½	2.19	2.19	2.44	1/32
	2½ by 2½ by 2	2.44	2.44	2.57	
	2½ by 2½ by 3	3.07	3.07	2.84	
3-inch.....	3 by 3 by ¾	1.90	1.90	2.60	
	3 by 3 by 1¼	2.22	2.22	2.75	
	3 by 3 by 1½	2.34	2.34	2.82	
	3 by 3 by 2	2.59	2.59	2.95	1/32
	3 by 3 by 2½	2.84	2.84	3.07	
	3 by 2 by 3	3.13	2.95	3.13	
3½-inch....	3½ by 3½ by 3	3.28	3.28	3.50	1/32
	3½ by 3½ by 2½	2.99	2.99	3.44	
4-inch....	4 by 3 by 4	3.89	3.80	3.89	
	4 by 4 by 2	2.84	2.84	3.62	
	4 by 4 by 2½	3.09	3.09	3.74	1/32
	4 by 4 by 3	3.38	3.38	3.80	
	4 by 4 by 3½	3.64	3.64	3.84	

MALLEABLE IRON FLANGES.

(Navy Department Specifications 45F6—July 30, 1913.)

General.—To be made from high-grade material and workmanship, and free from any defects which may affect the serviceability of the flange.

Quality of Iron.—To be made of a quality of malleable iron which will resist distortion or cracking during the process of expanding steel tubing into the flange.

Defects and Finish.—To be sound, smoothly cored, true to form, free from cold shuts or injurious blowholes, and thoroughly cleaned of sand scale and all irregularities. All surfaces not machined to be smooth and equal in this respect to the finish produced by pickling and tumbling.

Shape and Dimensions.—Flanges to be in accordance with tables and plans incorporated in and forming part of these specifications. In each requisition for threadless flanges statement shall be made as to whether flanges are for use on ventilation and water-tight piping systems or for drainage, fresh water, air escapes and equalizing systems. In the case of the former all internal diameters shall be in accordance with B and D dimensions, and in the case of the latter systems all internal diameters shall be in accordance with B^1 and D^1 dimensions.

Unfinished Flanges.—Unfinished flanges to be in accordance with the above-mentioned tables, with sufficient material in excess of the dimensions specified to permit of machining to such dimensions where finishing is required. Such flanges shall not be drilled or provided with the circular grooves or beveled edges on inside, as required in table.

Finished Flanges.—Finished flanges shall be drilled; all surfaces marked f in the accompanying plan of dimensions shall be machine finished. Threaded flanges shall be in accordance with dimensions given in table and sketch accompanying same. All threading to be suitable for standard weight iron pipe, threaded in accordance with Brigg's pipe thread standard.

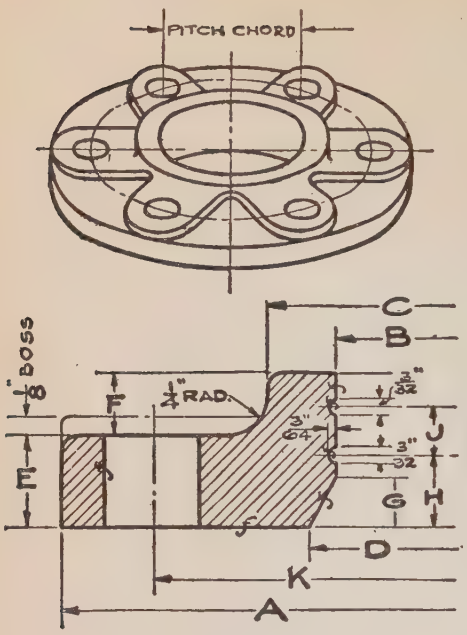

Threadless Flanges.

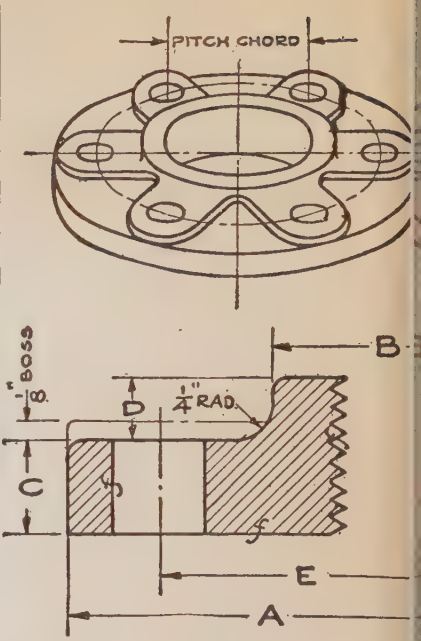

Threaded Flange.

FIG. 85.

Table 74.—Threaded Flanges.

Size of pipe tap.	Number of threads per inch.	Diameter.		Thickness.		Bolts.			
		Flange.	Boss.	Flange.	Boss.	Number.	Diameter	Diameter of pitch circle.	Pitch (chord).
		A	B	C	D			E	
In.		*In.*	*In.*	*In.*	*In.*		*In.*	*In.*	*In.*
1	11½	5	2⅝	1/2	3/8	6	1/2	3⅛	1.97
2	11½	5	3⅛	9/16	7/16	6	1/2	4 7/16	2.22
2½	8	6⅛	3⅝	9/16	1/2	6	1/2	5	2.50
3	8	6⅝	4⅛	9/16	9/16	8	1/2	5½	2.10
3½	8	7 3/16	4⅝	9/16	5/8	8	1/2	6 1/16	2.32
4	8	7⅝	5⅛	9/16	5/8	8	1/2	6½	2.51
4½	8	8 1/16	5⅝	9/16	11/16	10	1/2	7 1/16	2.18
5	8	9 1/16	6 5/16	9/16	3/4	10	1/2	7⅝	2.41
5½	8	9 9/16	6¾	5/8	3/4	10	5/8	8 5/16	2.57
6	8	10⅛	7⅜	11/16	3/4	12	5/8	8⅞	2.30

Table 75.—Threadless Flanges.

Nominal internal diameter.	Diameter.						Thickness.					Bolts.			
	Flange.	Hole.		Boss.	Bevel.		Flange.	Boss.	Depth of level.	Groove—face to center line.	Groove—center line to center line.	Number.	Diameter.	Diameter of pitch circle.	Pitch (chord).
	A	B	B′	C	D	D′	E	F	G	H	J			K	
In.	*In.*	*In.*	*In.*	*In.*	*In.*	*In.*	*In.*	*In.*	*In.*	*In.*	*In.*		*In.*	*In.*	*In.*
1½	5¼	2	2	2⅝	2⅜	2⅝	7/16	5/16	¼	⅜	¼	6	½	3⅛	1.97
2	5⅝	2¼	2½	3⅛	2⅞	2¾	7/16	5/16	¼	⅜	¼	6	½	4 7/16	2.22
2¼	5⅞	2½	..	3⅜	3⅛	..	7/16	5/16	¼	⅜	¼	6	½	4½	2.25
2½	6¼	2¾	3	3 11/16	3⅜	3⅜	½	7/16	¼	⅜	5/16	6	½	5	2.50
2¾	6⅝	3	..	3⅞	3⅝	....	½	7/16	¼	⅜	5/16	6	½	5⅛	2.63
3	6⅞	3¼	3½	4 1/16	3⅞	3 11/16	½	7/16	¼	⅜	5/16	8	½	5½	2.10
3¼	7⅜	3½	..	4 7/16	4 1/16	....	½	7/16	¼	⅜	5/16	8	½	5¾	2.20
3½	7 13/16	3¾	4	4¾	4⅜	4 3/16	½	7/16	¼	⅜	5/16	8	½	6 1/16	2.32
3¾	7 15/16	4	..	5	4 5/16	....	½	7/16	¼	⅜	5/16	8	½	6 5/16	2.43
4	7 15/16	4¼	4½	5¼	4 13/16	4 23/32	½	7/16	¼	⅜	5/16	8	½	6 9/16	2.50
4¼	7 15/16	4½	..	5½	4 15/16	....	½	7/16	¼	⅜	5/16	8	½	6 13/16	2.61
4½	8 1/16	4¾	5	5¾	5 5/16	5 3/32	½	7/16	¼	⅜	5/16	10	½	7 1/16	2.18
4¾	8 1/16	5	..	6	5 5/16	....	½	7/16	¼	⅜	5/16	10	½	7 5/16	2.26
5	9 1/16	5¼	5½	6 5/16	5 13/16	5¾	½	7/16	¼	⅜	5/16	10	½	7 13/16	2.41
5¼	9 5/16	5½	..	6 9/16	5 15/16	....	½	7/16	¼	⅜	5/16	10	½	8 1/16	2.49
5½	9 5/16	6	6	6 13/16	6 5/16	6¼	½	7/16	¼	⅜	5/16	10	½	8 5/16	2.57
5¾	9 5/16	6	..	7 1/16	6 5/16	....	½	7/16	¼	⅜	5/16	10	½	8 5/16	2.65
6	10⅜	6⅝	6⅞	7⅜	6 13/16	6⅞	½	7/16	¼	⅜	5/16	12	½	8 13/16	2.30
6¼	10⅜	6⅞	..	7⅜	6 13/16	....	½	7/16	¼	⅜	5/16	12	½	9 1/16	2.36
6½	10⅜	7	7	7⅜	7 1/16	7 3/32	½	7/16	¼	⅜	5/16	12	½	9 5/16	2.43
7	11 5/16	7⅜	7⅝	8⅜	7 13/16	7 23/32	½	7/16	¼	⅜	5/16	12	½	10	2.59
7¼	11 5/16	7⅝	..	8⅜	7 15/16	....	½	7/16	¼	⅜	5/16	12	½	10 1/16	2.66
7½	11⅝	8⅛	8	8 15/16	8 7/16	8 5/32	½	7/16	¼	⅜	5/16	12	½	10 5/16	2.73
8	12⅜	8⅝	8⅝	9 7/16	8 7/16	8 5/32	½	7/16	¼	⅜	5/16	14	½	11 1/16	2.46
8½	12 5/16	9	9	10	9 1/16	9 3/32	½	7/16	¼	⅜	5/16	14	½	11 5/16	2.59
9	12 5/16	10	10	10½	10 5/16	10 5/16	½	7/16	¼	⅜	5/16	14	½	12	2.75

VALVES: HOSE, AND MAGAZINE FLOOD AND SPRINKLING.

(Standard Stock Catalog designation: Valves, hose, magazine, flood, and sprinkling.)

(Navy Department Specifications 4SV46—January 2, 1918.)

General.—The compositions specified herein for various parts of valves shall be in accordance with the latest issue of the respective specifications covering these compositions, issued by the Navy Department.

Material. (a) *Valves.*—Body, disk, washer, bonnet, stuffing box, yoke and hose cap shall be of gun metal, composition G; or of valve bronze, composition M, unless otherwise specified.

(b) *Stems.*—Stems shall be of rolled manganese bronze, composition Mn-r, or rolled phosphor bronze, composition P-r.

(c) *Bolts.*—Studs or bolts for valve bonnets shall be forged steel. Studs or bolts for glands shall be rolled naval brass, composition N-r. All nuts shall be rolled naval brass.

(d) *Handwheels.*—Handwheels, unless otherwise specified, shall be of cast naval brass, composition N-c.

(e) *Soft disks and gaskets* shall be of leather.

Construction. (a) *Bonnets.*—All *hose* valves shall have screwed bonnets, unless otherwise stated in the order. All magazine sprinkling and flood valves shall be of the bolted-bonnet, outside-screw type, with stuffing-box glands secured with studs or bolts and nuts. Stuffing boxes on all floor and sprinkling valves 2 inches and under shall be an integral part of yoke casting.

(b) *Stuffing boxes* shall be so arranged that they can be repacked when under pressure with the valve open.

(c) *Ends.*—Hose valves and magazine flood valves shall have flanges on the pipe end and Navy standard hose threads at the hose end. Hose threads shall be in accordance with Table 76, incorporated herein. Sprinkling valves shall be flanged on both ends. Flanges shall be finished on face and

edges, and shall be in accordance with table (77) of dimensions given herein unless otherwise specified. Flanges shall be delivered blank.

(d) *Valve Seats.*—The valves shall be fitted with easily removable seats consisting of a threaded composition sleeve screwed into the body of the valve and fitted with slots for inserting a screw-driver wrench. Valves with special removable seats differing from the above will be considered but should be referred to the bureau concerned for approval.

(e) *Valve Disks.*—Valve disks shall not be rigidly connected to the stem. The under side of the composition valve disk shall have a threaded projection, over which shall be fitted a leather gasket and a composition washer, both being secured in place by a composition nut and split pin. The composition washer shall be of such diameter as not to interfere with the proper seating of leather gasket.and shall be in the form of a spider for all valves $4\frac{1}{2}$ inches and above.

(f) *Stems, etc.*—The stems of all valves shall have Acme threads. Stems of *magazine sprinkling* and *flood* valves shall work in a composition yoke and be fitted with an indicator; yoke shall be cut with slot to guide indicator and be clearly marked with the words "open" and "closed" at the respective points of the indicator. All valves shall open by turning handwheel to left.

(g) *Packing.*—All valves shall be delivered with stuffing boxes packed. The kind of packing may be specified by the government.

Pet Cocks.—All *magazine flood* valves shall be fitted with $\frac{3}{8}$-inch pet cocks for draining and testing.

Handwheels.—Handwheels on all hose valves shall be solid disk, flat top, with webs cast on the upper surface, as shown by sketch. Handwheels of flood and sprinkling valves shall have arms and rim, also a yoke to allow a connection for operating rod. Diameter of handwheels shall not be less than given in

Table 77. They shall have an arrow cast in the rim and the word "open," indicating the direction of opening, which shall in every case be by turning handwheel to left. The arrow and letters shall be distinct and of suitable size. The remainder of surface to be left plain. Handwheels shall have the rims and bosses finished and buffed. Valve stems shall be fitted with square ends, to which the handwheel shall be secured by means of hexagonal nuts, threaded to the stem.

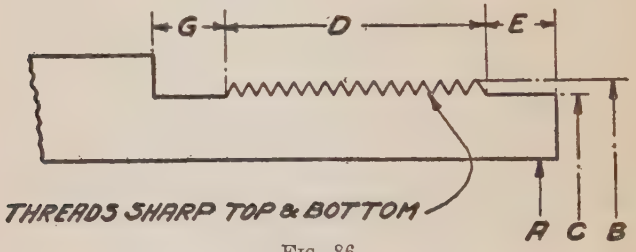

FIG. 86.

Table 76.—Dimensions of Navy Standard Hose Thread.
(Dimensions given in inches.)

Diameter of valve.	A	B	C	D	E	G	Angle of thread.	Threads per inch.
1½	1½	2 3/32	1 11/16	½	1/16	½	60°	10
2	2½	3 1/32	3 3/8	½	⅛	½	60°	7
3	3	3 27/32	3 13/16	½	⅛	½	60°	7
3	3½	4 5/32	4 5/16	½	⅛	½	60°	7
4	4	4 29/32	4 13/16	1	⅛	½	60°	7
4½	4½	5 7/32	5 5/16	1	⅛	½	60°	7
5	5	5 29/32	5 13/16	1¼	⅛	½	60°	7
5½	5½	6 7/32	6 5/16	1¼	⅛	½	60°	7
6	6	6 29/32	6 13/16	1¼	⅛	½	60°	7
6½	6½	7 7/32	7 5/16	1½	⅛	½	60°	7

Caps.—All *hose* valves shall be fitted with cap and chain, the cap to be arranged with eight slots for the standard hose spanner shown on the latest specifications for hose fittings issued by the Navy Department. Caps shall be furnished with leather washers.

Tests.—(a) Chemical tests of material shall be made as required by the specifications covering the various compositions used, but no physical tests will be required for the body and disk of valves other than specified in paragraph (b).

Table 77.—Dimensions in Inches of Standard Hose, Magazine Flood, and Sprinkling Valves.

Hose Valves.

Size of valve.	Diameter of valve stem.	Thickness of valve body.	Diameter of flange.	Thickness of flange.	Dimension "H."	Dimension "J."	Dimension "K."	Dimension "L."	Minimum diameter of handwheel.
1½	¾	3/16	5 1/16	7/16	....	3¾	15/16	....	4
2½	⅞	1/4	6⅞	½	9 3/16	4⅞	1 1/16	....	6

Magazine Flood Valves.

1½	¾	3/16	5 1/16	7/16	8¾	....	1¼	1	4
2	1	3/16	6 1/16	½	11½	5¾	1⅛	1	6
2½	1	1/4	6⅞	½	12¼	6¼	1 3/16	1	6
3	1	1/4	7 3/16	½	13	6½	1⅜	1	7
3½	1⅛	1/4	7 11/16	½	13¾	6¾	1⅜	1	8
4	1⅛	1/4	8 3/16	½	15	7½	1⅝	1	8
4½	1¼	1/4	9 1/16	½	16	8	1⅞	1	9
5	1¼	5/16	9 1/16	5/8	16¾	8⅜	2	1	10
5½	1⅜	5/16	9 9/16	5/8	18	9	2	1	10
6	1⅜	5/16	10⅛	5/8	18¾	9⅜	2⅛	1	11
6½	1⅜	5/16	10⅝	5/8					

Magazine Sprinkling Valve.

1½	¾	3/16	5 1/16	7/16	8¾	....	1¼	1	4
2	⅞	3/16	5 1/16	½	10¼	....	1⅜	1	5
2½	1	3/16	6⅞	½	11½	....	1½	1	6
3	1	1/4	6⅞	½	12½	....	1½	1	6
3½	1⅛	1/4	7 3/16	½	13	....	1⅝	1	7
4	1⅛	1/4	7 11/16	½	13¾	....	1⅝	1	8
4½	1¼	1/4	8 3/16	½	15	....	1⅞	1	8
5	1¼	5/16	9 1/16	5/8	16	....	1⅞	1	9
5½	1⅜	5/16	9 9/16	5/8	16¾	....	2	1	10
6	1⅜	5/16	10⅛	5/8	18	....	2	1	10

(b) All valves and caps shall be subjected to a hydrostatic pressure of 250 pounds per square inch, to determine that the casting is sound. Valves shall be open during this test.

(c) All valves shall be subjected to a hydrostatic pressure of 250 pounds per square inch with valve closed to determine that the valve is tight.

Spares.—Three spare leather washers shall be furnished for each valvé disk and one spare valve seat shall be furnished with each eight valves. Each hose valve shall have three spare leather washers for cap furnished in addition to above.

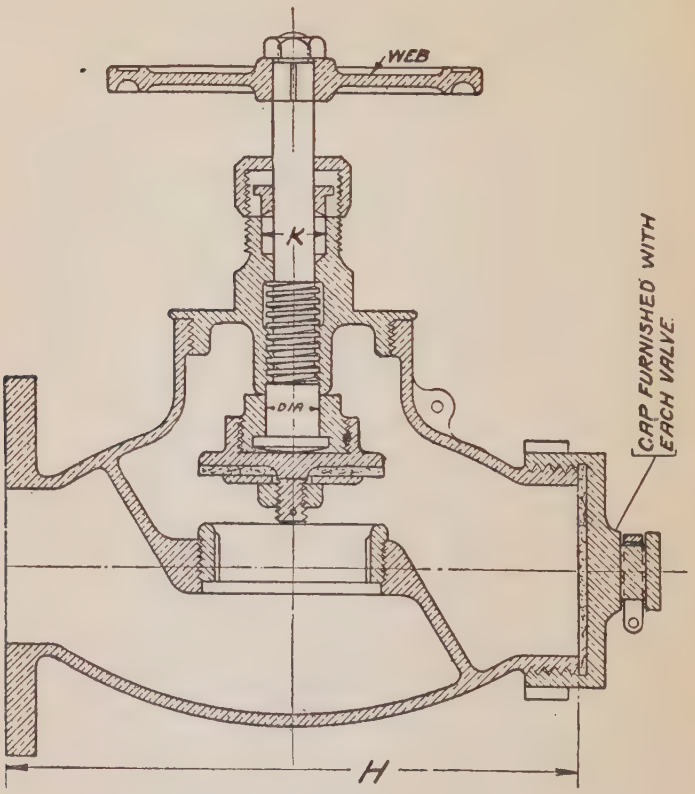

FIG. 87.—Globe Hose Valve.

Marking.—Each valve shall have distinctly stamped or cast on one side of the body the trade-mark or name of the maker and the size of the valve.

Type of Hand-Wheel for all Hose Valves.

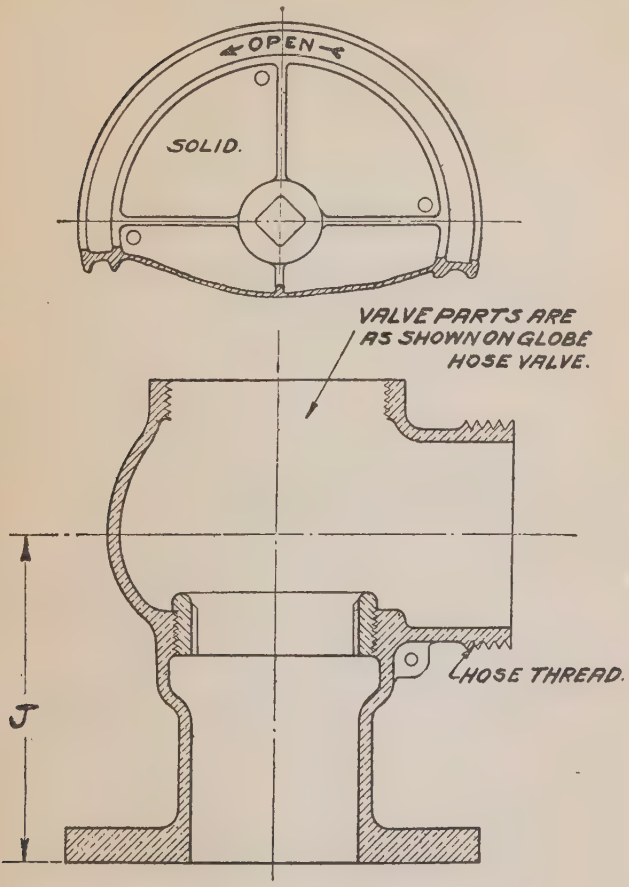

FIG. 88.—Angle Hose Valve.

Type of Hand-Wheel for all Magazine Flood and Sprinkling Valves.

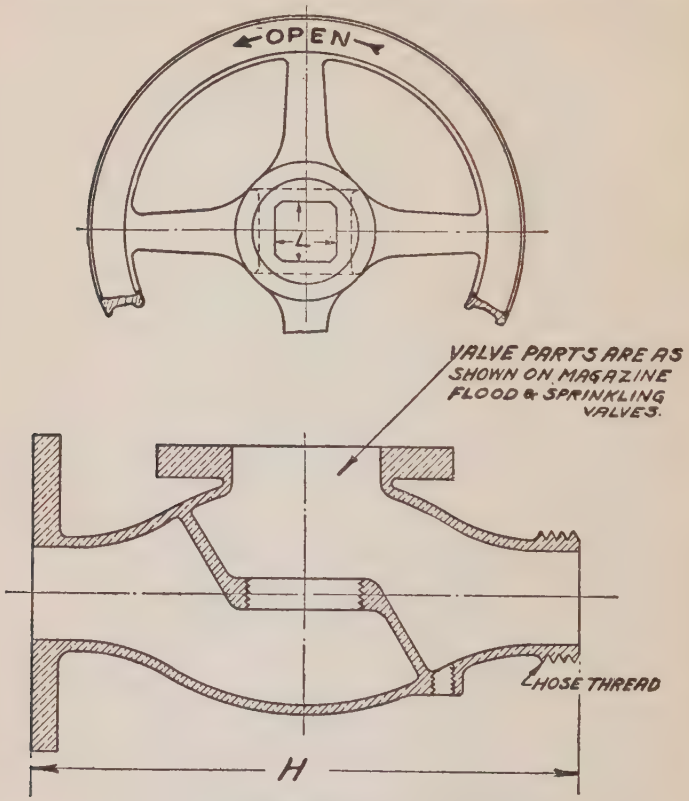

FIG. 89.—Magazine Flood Globe Valve.

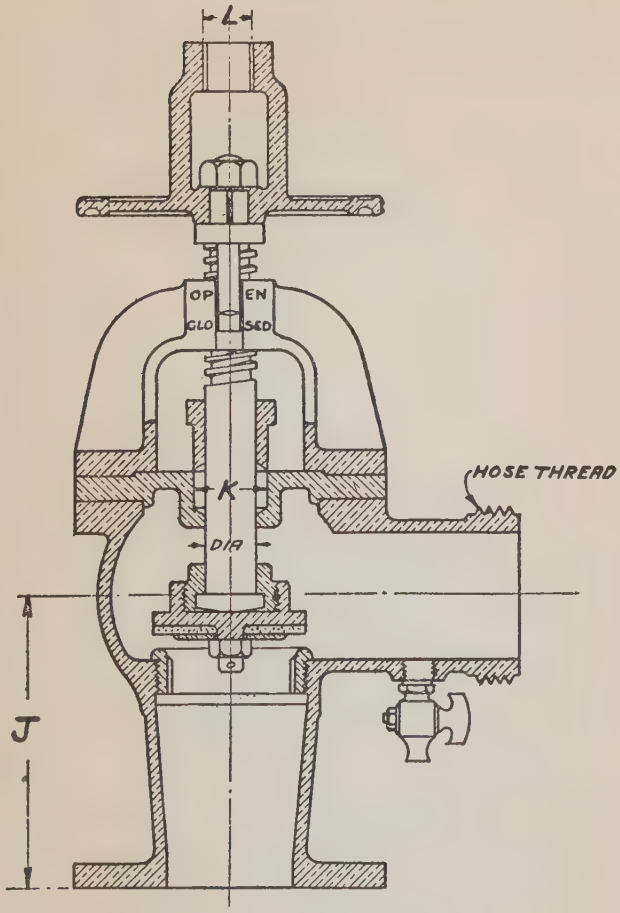

FIG. 90.—Magazine Flood Angle Valve.

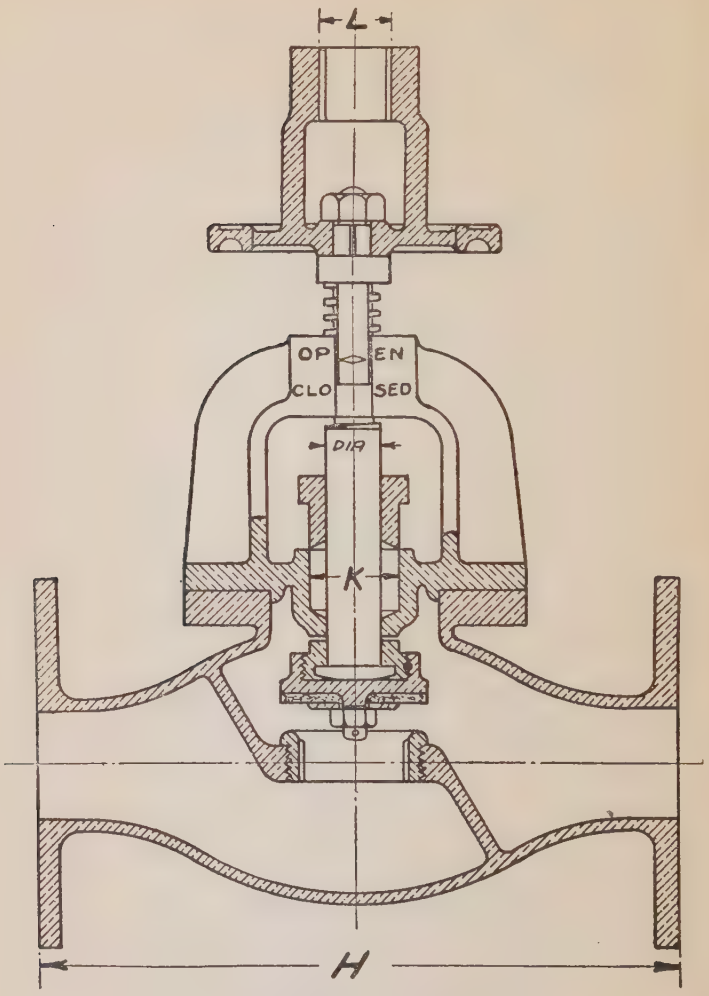

FIG. 91.—Magazine Sprinkling Valve.

HOSE FITTINGS.

(Navy Department Specifications 34F3a—September 1, 1916.)

Quality.—To be made of high-grade material, of good workmanship, and to be free from all defects which may affect the appearance or serviceability of the fittings.

Purpose.—For use on suction, cotton rubber lined, rubber fire, rubber wash deck, engineer's department, water supply, steam, unlined linen and oil hose.

Plans.—Fittings to be in general accordance with the plans incorporated in and forming part of these specifications.

Material. (a) *Composition Parts.*—Female couplings, male couplings, swivels, reducing couplings, nozzles and pipes, one-piece nozzles and suction strainers shall be made of composition in accordance with the following analysis:

Copper, 83 per cent minimum.
Tin, 5 per cent minimum.
Zinc, 7 per cent maximum.
Lead, 3 per cent maximum.

(b) *Rubber Washers.*—Washers for couplings, reducing couplings, complete suction strainer, pipes and nozzles, and for making tight joints when expanding unlined hose, as shown in assembly for unlined linen hose as part 6 and in detail on page with expanding rings, shall be in accordance with the latest issue of Navy Department specifications for the type of hose for which the fittings are intended, and of dimensions as given herein.

(c) *Expanding Rings.*—Expanding rings for expanding hose into couplings shall be cut from seamless-drawn tubing of the thickness called for in table. For ¾-inch hose, the rings may be of either brass or copper. For sizes larger than ¾ inch, they shall be of brass.

(d) *Steel Spanner.*—Spanners to be of steel, drop forged, and to be heavily and evenly hot galvanized.

Finish.—All composition parts to be finished smooth and polished on the outside surfaces. The inside surfaces to be lathe finished, except the corrugations in tailpieces of male and female couplings which shall be left rough to bind the hose when expanded. Wash-deck hose nozzles to be sand blasted on the inside, but not lathe finished; the nose to be drilled to $\frac{5}{8}$ inch until the drill runs out.

Marking.—Parts shall be stamped with the contractor's name, the year and month of manufacture, and size of hose, in letters $\frac{1}{8}$ inch high, at points marked *A-A* on plans.

Couplings.—Couplings to be of two types, as follows:

(a) For suction, cotton rubber lined, rubber fire, rubber wash deck, engineer's department, water supply, steam and oil hose, a complete set of couplings, as shown in coupling assembly, shall consist of the following parts:

Part 1, female section.

Part 2, male section.

Part 3, swivel, attached to female section by expanding the latter; swivel to turn freely with the hand.

Part 4, expanding rings, one each for male and female sections.

Part 5, rubber washer fitting recess in swivel.

(b) For unlined linen hose a complete set of couplings, as shown in coupling assembly, shall consist of the following parts:

Part 3, swivel, attached to female section by expanding the latter; swivel to turn freely with the hand.

Part 4, expanding rings, one each for male and female sections.

Part 5, rubber washer fitting recess in swivel.

Part 6, rubber washers, one each for male and female sections, fitting recesses in tailpieces and insuring tight joints when rings are expanded.

Part 7, female section.

Part 8, male section.

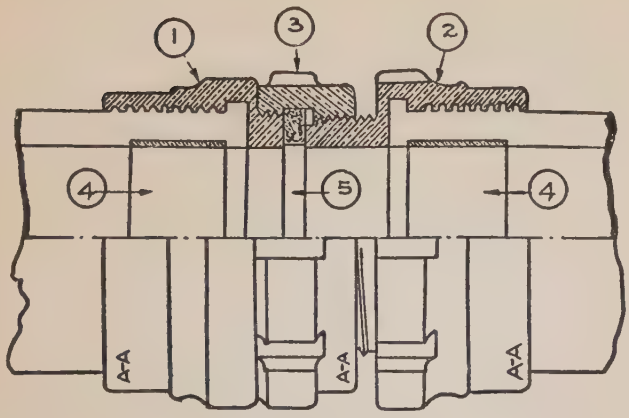

FIG. 92.—Coupling Assembly. For all Hose Except Unlined Linen.

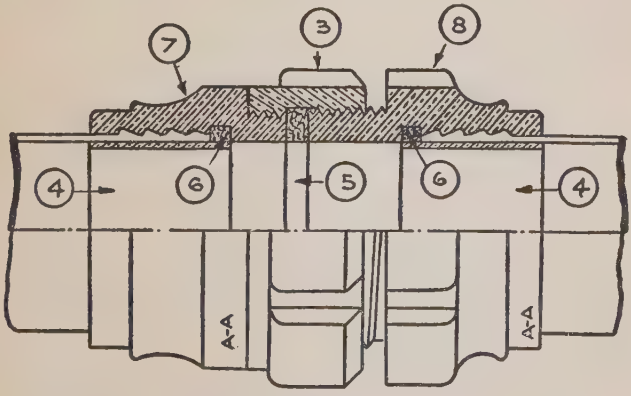

FIG. 93.—Coupling Assembly. For Unlined Linen.

Suction Strainer.—The complete assembler strainer to consist of the following parts:

Suction strainer as shown in plan.

Part 3, swivel, attached to strainer by expanding the latter; swivel to turn freely with the hand.

Rubber washer, fitting recess in swivel, same as part 5 of coupling assembly.

Reducing Couplings.—These couplings are for attaching $1\frac{1}{2}$-inch to $2\frac{1}{2}$-inch connections. Each coupling to be furnished with a rubber washer, fitting recess, same as part 5 of coupling assembly.

Nozzles.—Nozzles to be of two types, as follows:

(a) *One Piece.*—Unless otherwise specified, one-piece nozzles in accordance with plan shall be supplied with nozzles are required. The nozzle listed for $2\frac{1}{2}$-inch unlined linen hose is equally suitable for $2\frac{1}{2}$-inch cotton rubber lined and rubber fire hose. Each nozzle to be furnished with one rubber washer, part 9 or 10, depending upon the size, fitting the recess in the butt of the nozzle.

(b) *Two Piece.*—When called for, two-piece nozzles as shown in nozzle and pipe assembly and details shall be supplied. Each nozzle and pipe to be furnished with two rubber washers, parts 9 and 10, fitting the recesses in the butts of nozzle and pipe, respectively.

Threads.—All threads to be Navy standard as shown, except on male section and swivel of $\frac{3}{4}$-inch steam hose, which shall be threaded with iron pipe size threads.

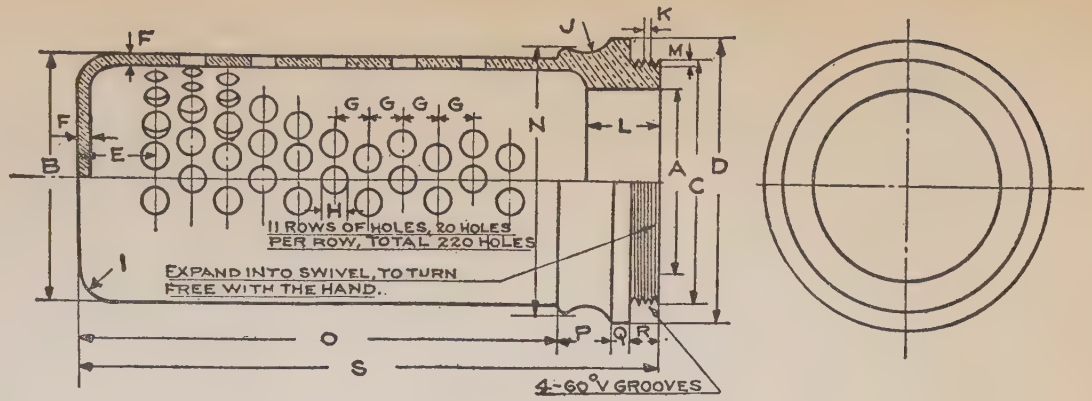

FIG. 94.—Suction Strainer.

Table 78.

Size of hose.	A	B	C	D	E	F	G	H	I	J	K	L	M	N	O	P	Q	R	S
1½	1½	2¼	2¼	2 13/16	1	1/8	11/32	3/16	½	3/8	3/32	1	3/32	2½	5⅛	5/16	¼	3/8	6½
2	2	2¾	2¾	3 5/16	1	1/8	13/32	¼	½	3/8	3/32	1	3/32	3	5¾	3/8	¼	3/8	7⅛
2½	2½	3¼	3¼	3 13/16	1	1/8	15/32	5/16	½	3/8	3/32	1	3/32	3½	6⅜	3/8	¼	3/8	7¾
3	3	3¾	3¾	4 5/16	1	1/8	17/32	3/8	½	3/8	3/32	1	3/32	4	7	3/8	¼	3/8	8⅜

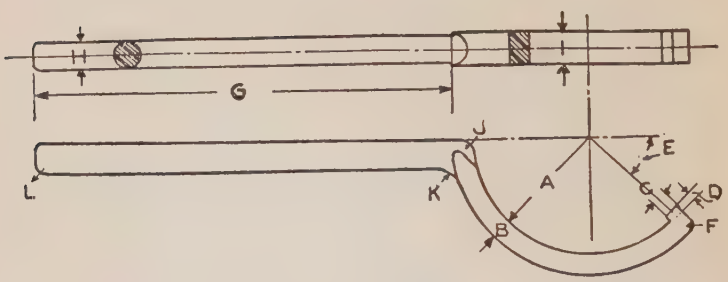

FIG. 95.—Spanners.

Table 79.

Size of hose.	Name.	A	B	C	D	E	F	G	H	I	J	K	L
1½	Suction	1¾	¼	¼	3/16	45°	3/16	6	7/16	½	¼	⅜	⅛
2	Suction	2	⅜	¼	3/16	45°	3/16	7	9/16	⅝	5/16	7/16	⅛
2½	Suction	2¼	⅜	¼	3/16	45°	3/16	8	9/16	⅝	5/16	7/16	⅛
3	Suction	2½	⅜	¼	3/16	45	3/16	9	9/16	⅝	5/16	7/16	⅛
2½	Cotton rubber lined hose and rubber fire.	2 1/16	⅜	¼	3/16	45°	3/16	8	½	⅝	5/16	7/16	⅛
1½	Rubber wash deck rubber hose and eng. dept.	1⅜	5/16	3/16	⅛	30°	⅛	6	9/16	⅝	9/32	⅜	⅛
1¼	Water supply	1⅜	5/16	3/16	⅛	30°	⅛	6	9/16	⅝	9/32	⅜	⅛
¾	Steam	1 3/32	¼	3/16	⅛	30°	⅛	5½	½	9/16	¼	5/16	⅛
1½	Unlined linen	1⅜	5/16	3/16	⅛	30°	⅛	6	9/16	⅝	9/32	⅜	⅛
2½	Unlined linen	2 1/16	⅜	¼	3/16	45°	3/16	8	⅝	⅝	5/16	7/16	⅛
4	Oil	3	⅜	¼	3/16	45°	3/16	9	9/16	⅝	5/16	½	⅛

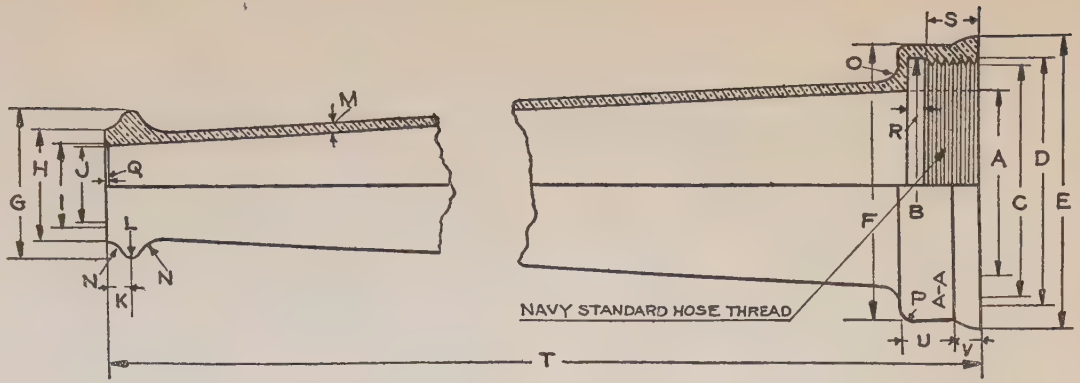

FIG. 96.—Nozzle.

Table 80.

Size of hose	Name	A	B	C	D	E	F	G	H	I	J	K	L	M	N	O	P	Q	R	S	T	U	V	W
1½	Rubber Wash Deck, Rubber Hose-Engraving-Department.	1½	2⅛	1 31/32	2⅛	2 13/16	2 9/16	1	⅞	1 1/16	⅝	5/32	1/16	3/32	¼	¼	⅛	1/32	¼	½	12	¾	⅛	10 threads.
1½	Unlined Linen	1½	2⅛	1 31/32	2⅛	2 13/16	2 9/16	1	⅞	1 1/16	⅝	5/32	1/16	3/32	¼	¼	⅛	1/32	¼	½	12	¾	⅛	10 threads.
2½	Unlined Linen	2½	3⅜	3⅛	3⅜	3⅞	3⅝	1 7/16	1 7/16	1⅛	1	5/16	⅛	⅛	½	¼	⅛	1/16	¼	¾	15	¾	⅜	7 threads.

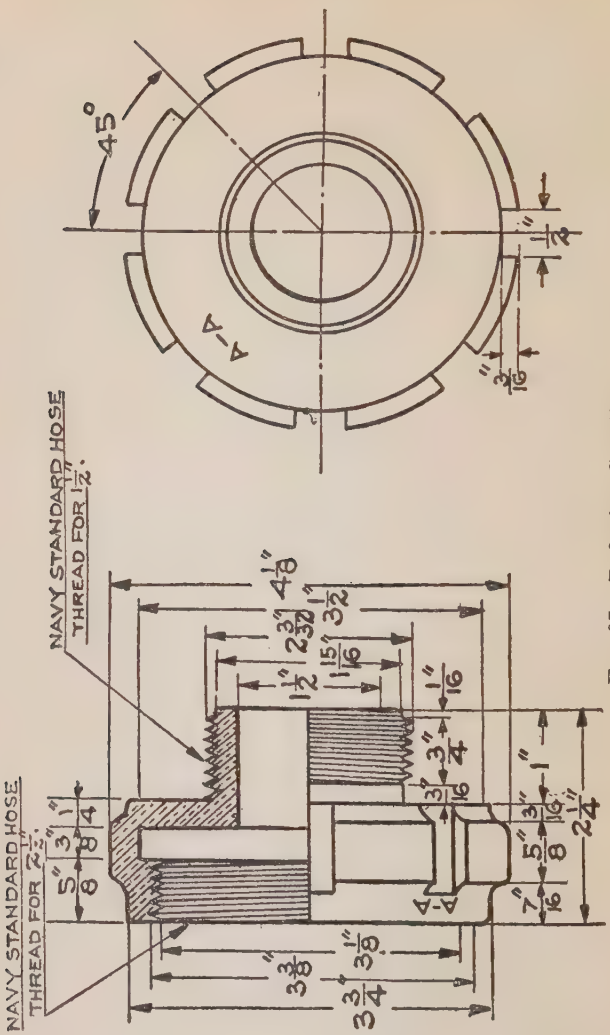

FIG. 97.—Reducing Coupling.

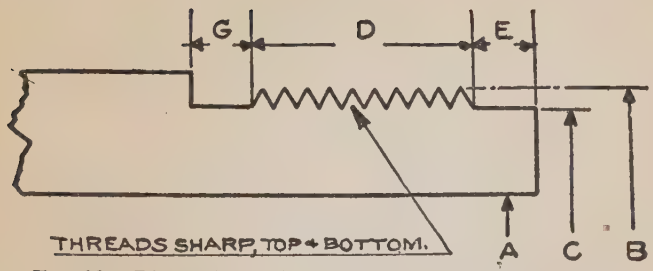

FIG. 98.—Dimensions of Navy Standard Hose Threads.

Table 81.

Size of hose.	A	B	C	D	E	G	Angle of thread.	Threads per inch.
$1\frac{1}{4}$	$1\frac{1}{4}$	$2\frac{3}{32}$	$1\frac{15}{16}$	$\frac{1}{2}$	$\frac{1}{16}$	$\frac{1}{8}$	60°	10
$1\frac{1}{2}$	$1\frac{1}{2}$	$2\frac{3}{32}$	$1\frac{15}{16}$	$\frac{1}{2}$	$\frac{1}{16}$	$\frac{1}{8}$	60°	10
2	2	$2\frac{25}{32}$	$2\frac{17}{32}$	$\frac{3}{4}$	$\frac{1}{8}$	$\frac{1}{8}$	60°	7
$2\frac{1}{2}$	$2\frac{1}{2}$	$3\frac{11}{32}$	$3\frac{3}{32}$	$\frac{3}{4}$	$\frac{1}{8}$	$\frac{1}{8}$	60°	7
3	3	$3\frac{27}{32}$	$3\frac{19}{32}$	$\frac{3}{4}$	$\frac{1}{8}$	$\frac{1}{8}$	60°	7

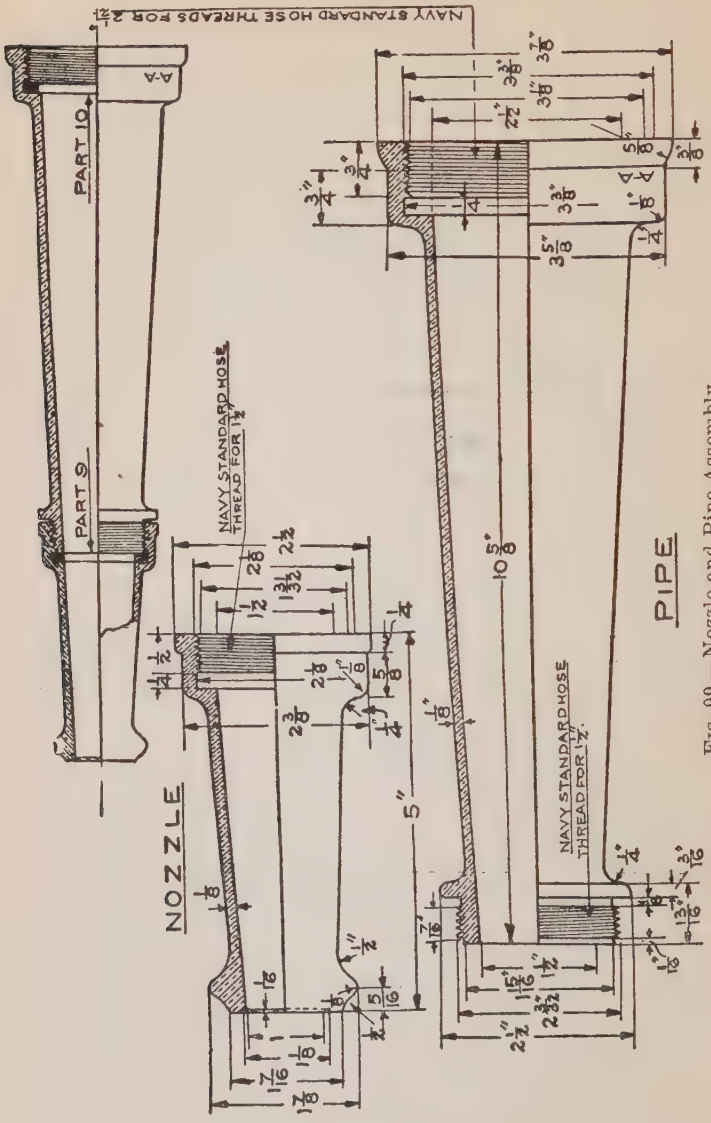

FIG. 99.—Nozzle and Pipe Assembly.

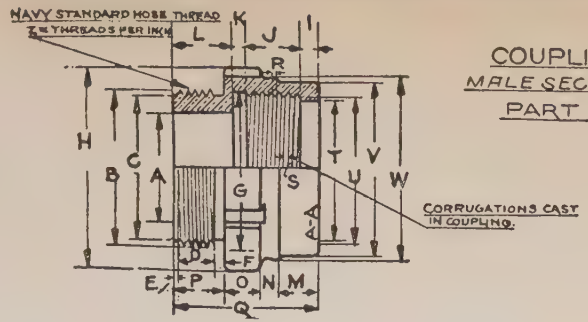

FIG. 100.

Table 82.

Pipe. of Size	Name.	A	B	C	D	E	F	G	H	I	J	K	L	M	N	O	P	Q	R	S	T	U	V	W	X	Y	Z	a
1½	Suction	1½	2 3/32	1 15/16	½	1/16	½	27/8	3½	1/8	1 1/2	¼	1 3/16	7/8	9/16	9/16	11/16	2 11/16	3/4	9/64	2 9/16	2 5/8	3 1/16	3 1/8	3/16	1/2	10 thds.	45°
2	Suction	2	2 5/32	2 1/16	½	1/16	½	3 3/32	4	1/8	1 15/16	¼	1 7/8	7/8	9/16	9/16	1	3	3/4	9/64	3 1/16	3 1/8	3 9/16	3 5/8	3/16	1/2	7 "	45°
2½	Suction	2½	3 11/32	2 9/16	½	1/16	½	3 5/8	4½	1/8	2 1/2	¼	1 7/8	7/8	9/16	9/16	1	3	3/4	9/64	3 1/16	3 1/8	4 1/16	4 1/8	3/16	1/2	7 "	45°
3	Suction	3	3 13/32	3 1/16	½	1/16	½	4 3/8	5	1/8	2 1/2	¼	1 7/8	7/8	9/16	9/16	1	3½	3/4	9/64	3 1/16	3 1/8	4 1/16	4 1/8	3/16	1/2	7 "	45°
2½	Cotton rubber lined hose.	2½	3 11/32	3 3/32	½	1/16	½	3 5/8	4½	1/8	1 3/8	¼	1 5/8	11/16	9/16	9/16	1	2 7/8	3/4	9/64	3 1/8	3 3/16	3 1/2	3 5/8	3/16	1/2	7 "	45°
2½	Rubber fire....	2½	3 11/32	3 3/32	½	1/16	½	3 3/8	4½	1/8	1 3/8	¼	1 5/8	11/16	5/8	9/16	1	2 7/8	3/4	9/64	3 1/8	3 3/16	3 1/2	3 5/8	3/16	1/2	7 "	45°
1½	Rubber wash deck.	1½	2 3/32	1 15/16	½	1/16	½	2 1/8	2 3/4	1/4	1 3/8	3/16	1 3/16	9/16	½	½	11/16	2	3/4	5/64	2	2 1/16	2 3/8	2 1/2	1/8	1/4	10 "	60°
1½	Rubber hose eng. dept.	1½	2 5/32	1 15/16	½	1/16	½	2 1/8	2 3/4	1/4	3/4	3/16	1 3/16	9/16	¼	½	11/16	2	3/4	5/64	2	2 1/16	2 3/8	2 1/2	1/8	1/4	10 "	60°
1¼	Water supply .	1¼	2 3/32	1 15/16	½	1/16	½	1 13/16	2 3/4	1/4	3/4	3/16	1 3/16	7/16	3/8	½	11/16	2	1/16	1/16	1 3/16	1 3/16	2 1/8	2 3/8	1/8	1/4	10 "	60°
¾	Steam.....	¾	1 7/64	1.115	½	1/16	½	1 3/8	2 3/16	1/4	1 1/4	1/4	1 3/16	7/16	3/8	½	11/16	2 9/16	5/64	11/64	1 1/2	1 1/2	1 7/8	2	1/8	1/4	11½ "	60°
4	Oil	4	4 7/8	4 21/32	1	¼	⅛	5 1/16	6	⅛	2 1/16	¼	1 1/2	1 7/16	9/16	11/16	1¼	3 15/16	3/64	9/64	4 3/4	4 13/16	5 3/4	5 9/16	3/16	½	I. P. S. 7 thds.	45°

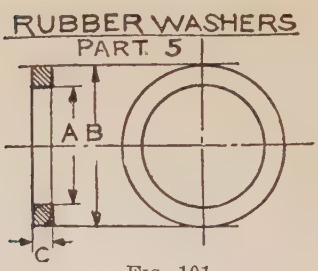

FIG. 101.

Table 83.

Size of hose.	Name.	A	B	C
1½	Suction	1⅝	2½	3/16
2	Suction	2⅛	3	¼
2½	Suction	2⅝	3½	¼
3	Suction	3⅛	4	¼
2½	Cotton rubber lined hose and rubber fire.	2⅝	3½	¼
1½	Rubber wash deck and rubber hose, eng. dept.	1 9/16	2⅛	3/16
1¼	Water supply	1 5/16	2⅛	3/16
¾	Steam	13/16	1 5/16	3/16
1½	Unlined linen	1 9/16	2⅛	¼
2½	Unlined linen	2⅝	3½	¼
4	Oil	4⅛	5	¼

PIPE AND NOZZLE WASHERS
PARTS 9 & 10

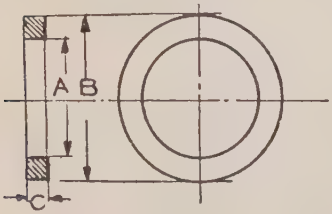

FIG. 102.

Table 84.

	A	B	C
Part 10	2⅝	3⅜	3/16
Part 9	1 9/16	2⅛	3/16

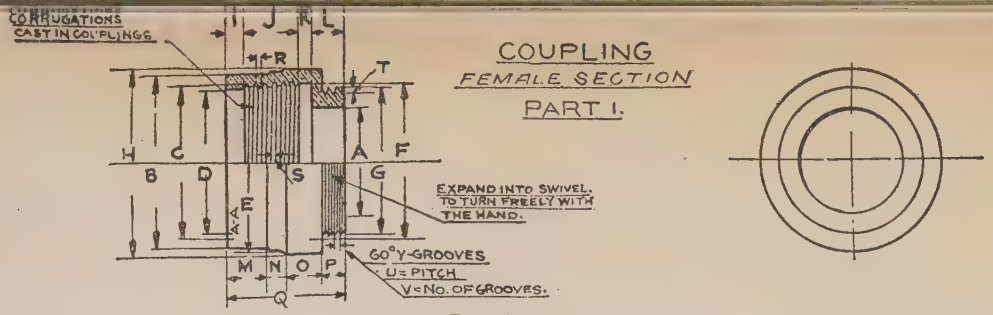

FIG. 103.

Table 85.

Size of hose.	Name.	A	B	C	D	E	F	G	H	I	J	K	L	M	N	O	P	Q	R	S	T	U	V
1½	Suction	1½	3 1/16	2⅜	2 9/16	3¼	2⅞	2¼	3 7/16	⅛	1½	¼	½	⅞	½	⅝	⅜	2⅜	¾	9/64	3/32	3/32	4
2	Suction	2	3 9/16	3⅜	3 1/16	3¾	3⅜	2¾	3 11/16	⅛	1½	¼	½	⅞	½	⅝	⅜	2⅜	¾	9/64	3/32	3/32	4
2½	Suction	2½	4 1/16	3⅝	3 9/16	4¼	3⅞	3¼	4 7/16	⅛	1½	¼	½	⅞	½	⅝	⅜	2⅜	¾	9/64	3/32	3/32	4
3	Suction	3	4 9/16	4⅜	4 1/16	4¾	4⅜	3¾	4 11/16	⅛	1½	¼	⅝	⅞	½	¾	⅜	2½	¾	9/64	3/32	3/32	4
2½	Cotton rubber lined hose.	2½	3½	3 3/16	3⅛	3⅝	3⅜	3¼	3¾	⅛	1 3/8	¼	½	1 1/16	⅝	9/16	⅜	2¼	¾	9/64	3/32	3/32	4
2½	Rubber fire	2½	3¼	3 3/16	3⅛	3⅝	3⅜	3¼	3¾	⅛	1 3/8	¼	½	1 1/16	⅝	9/16	⅜	2¼	¾	9/64	3/32	3/32	4
1½	Rubber wash deck	1½	2⅜	2 1/16	2	2 7/16	2⅛	2	2½	¼	¾	3/16	7/16	9/16	¼	½	5/16	1⅝	¾	5/64	1/16	5/64	4
1½	Rubber hose eng. dept.	1½	2⅜	2 1/16	2	2 7/16	2⅛	2	2½	¼	¾	3/16	7/16	9/16	¼	½	5/16	1⅝	¾	5/64	1/16	5/64	4
1¼	Water supply	1¼	2⅛	1 13/16	1¾	2 3/16	1 13/16	1⅝	2¼	¼	¾	3/16	7/16	9/16	¼	½	5/16	1⅝	1/16	1/16	1/16	5/64	4
¾	Steam	¾	1⅞	1½	1½	2	1⅝	1 5/16	2⅛	¼	1¼	¼	7/16	1⅜	¼	¼	5/16	2 3/16	9/64	1/32	1/16	5/64	4
4	Oil	4	5 9/16	4 13/16	4¾	5¾	5 1/16	4¾	5 15/16	⅛	2 1/16	¼	⅝	1 7/16	½	¾	⅜	3 1/16	3/64	9/64	3/32	3/32	4

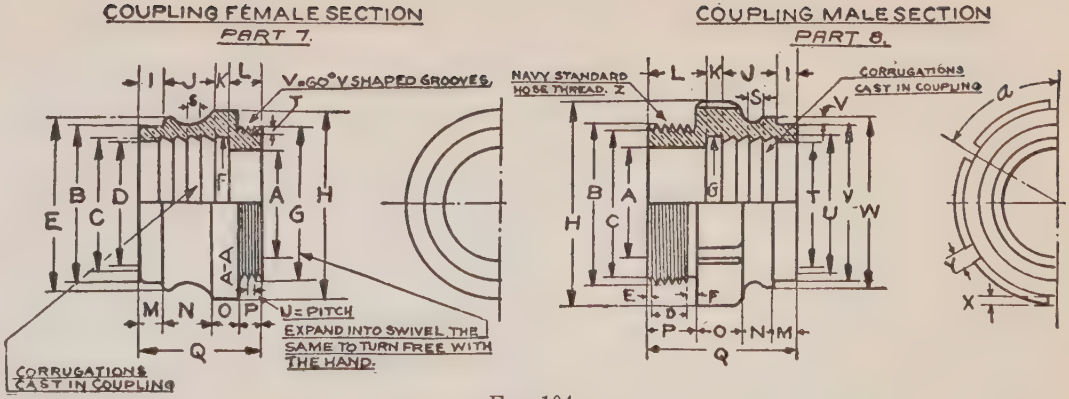

FIG. 104.

Table 86.—Coupling Female Section Part 7.

Size of hose.	Name.	A	B	C	D	E	F	G	H	I	J	K	L	M	N	O	P	Q	S	T	U	V
1½	Unlined linen hose.....	1½	2 5/32	1 27/32	1 23/32	2 3/32	1¾	2	2½	¼	¾	3/16	7/16	5/16	5/8	3/8	5/16	1⅝	3/16	1/16	1/4	4
2½	Unlined linen hose.....	2½	2 3/32	2 27/32	2 23/32	3 5/32	2¾	3¼	3¾	¼	⅞	7/16	½	3/8	⅞	7/16	3/8	2 1/16	3/32	3/32	3/32	4

Table 87.—Coupling Male Section Part 8.

Size of hose.	Name.	A	B	C	D	E	F	G	H	I	J	K	L	M	N	O	P	Q	S	T	U	V	W	X	Y	Z	a
1½	Unlined linen hose.	1½	2 3/32	1 15/16	½	1/16	⅛	1¾	2¾	¼	¾	3/16	13/16	5/16	⅜	5/8	11/16	2	3/16	1 23/32	1 27/32	2 3/32	2 3/32	⅛	¼	10	60°
2½	Unlined linen hose.	2½	5 11/32	3 3/32	¾	⅛	⅛	2¾	4½	¼	⅞	7/16	1⅛	5/16	11/16	11/16	1	2 11/16	7/32	2 23/32	2 27/32	3 5/32	3 3/32	3/16	½	7	45

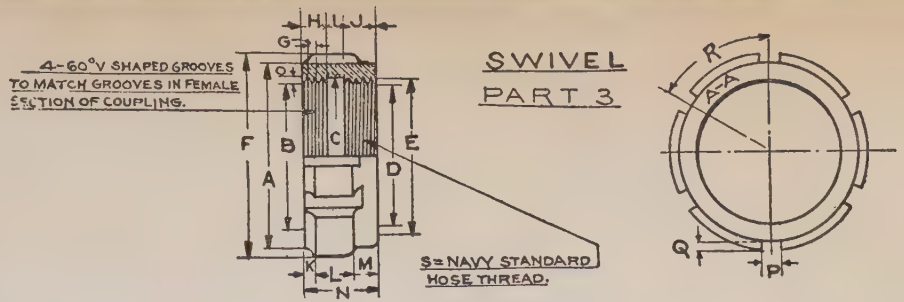

FIG. 105.

Table 88.

Size of hose.	Name	A	B	C	D	E	F	G	H	I	J	K	L	M	N	O	P	Q	R	S
1½	Suction	3⅛	2¼	2½	1 3/32	2⅛	3½	3/32	3/8	¼	7/16	⅛	5/8	5/16	1 1/16	3/32	½	3/16	45°	10 Threads
2	Suction	3⅝	2¾	3	2 9/16	2 13/16	4	3/32	3/8	3/8	5/8	⅛	5/8	5/8	1⅜	3/32	½	3/16	45°	7 Threads
2½	Suction	4⅛	3¼	3½	3⅛	3⅜	4½	3/32	3/8	3/8	5/8	⅛	5/8	5/8	1⅜	3/32	½	3/16	45°	7 Threads
3	Suction	4⅝	3¾	4	3⅝	3 7/4	5	3/32	3/8	3/8	5/8	⅛	5/8	5/8	1⅜	3/32	½	3/16	45°	7 Threads
2½	Cotton rubber lined hose and rubber fire.	3⅜	3¼	3½	3⅛	3⅜	4⅛	3/32	3/8	3/8	5/8	⅛	5/8	5/8	1⅜	3/32	½	3/16	45°	7 Threads
1½	Rubber wash deck and rubber hose-eng. dept.	2½	2	2⅛	1 3/32	2⅛	2¾	5/64	5/16	¼	7/16	⅛	¾	⅛	1	1/16	¼	⅛	60°	10 Threads
1¼	Water supply	2½	1⅝	2⅛	1 3/32	2⅛	2⅜	5/64	5/16	¼	7/16	⅛	¾	⅛	1	1/16	¼	⅛	60°	10 Threads
¾	Steam	1 5/16	1 5/16	1.13	1 9/32	2 3/16	5/64	5/16	¼	7/16	3/16	5/8	3/16	1	1/16	¼	⅛	60°	11½ I.P.S. Thd's.
1½	Unlined linen	2½	2	2⅛	1 3/32	2⅛	2¾	5/64	5/16	¼	7/16	⅛	¾	⅛	1	1/16	¼	⅛	60°	10 Threads
2½	Unlined linen	3¾	3¼	3½	3⅛	3⅜	4⅛	3/32	3/8	¼	3/4	3/16	13/16	3/8	1⅜	3/32	½	3/16	45°	7 Threads
4	Oil	5⅝	4¾	5	4 1/16	4 3/32	6	3/32	3/8	3/8	7/8	⅛	7/8	5/8	1⅝	3/32	½	3/16	45°	7 Threads

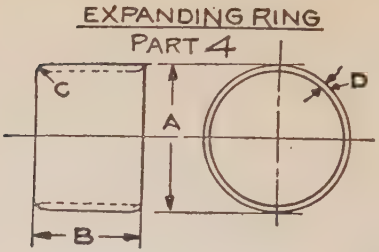

FIG. 106.

Table 89.

Size of hose.	Name.	A	B	C	D
1½	Suction	1½	$1\frac{5}{16}$	½	.05
2	Suction	2	$1\frac{5}{16}$	½	.05
2½	Suction	2½	$1\frac{5}{16}$	½	.05
3	Suction	3	$1\frac{5}{16}$	½	.05
2½	Cotton rubber lined hose and rubber fire.	2½	$1\frac{5}{16}$	½	.05
1½	Rubber wash deck and rubber hose eng. dept.	1½	¾	$\frac{1}{2}$	.04
1¼	Water supply	1¼	⅝	¼	.04
¾	Steam	¾	$1\frac{3}{16}$	¼	.03
1½	Unlined linen	1½	$1\frac{1}{8}$	½	.04
2½	Unlined linen	2½	1½	½	.05
4	Oil	4	$1\frac{7}{8}$	½	.05

Rubber Washers.

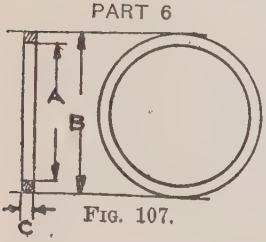

FIG. 107.

Table 90.

Size of hose.	Name.	A	B	C
1½	Unlined linen	1½	$1\frac{3}{4}$	$\frac{3}{16}$
2½	Unlined linen	2½	$2\frac{3}{4}$	$\frac{7}{16}$

Reseating and Grinding Valves.—Globe or angle valves, when found to be leaking, may be repaired by reseating, or if not in too bad condition, by grinding. A reseating machine is best for this work, as it is operated by hand, and the valve may be repaired without removing it from the line of pipe. These machines have universal chucks and also screw connections to fit on the bonnet threads of all standard valves. The bonnet is removed and the machine set in place either by the chuck or the screw threads, as the case may be. Cutters are provided with these machines, with the standard angles and of sizes to suit the different size valves; the cutters fit on the end of a shaft which is geared to both feed and drive by hand. In reseating, care should be taken to cut away only such of the surface of the seat as will be necessary to remove the scores and indentations on the seat, and insure an even, smooth surface for the bearing of the disk.

When a reseating machine is not obtainable, this work can only be done by chucking the body of the valve in a lathe and facing off the seat with a tool. If the disk is cut or scored, it should be faced off in a lathe; if, however, a lathe is not available, and the disk is so badly cut that grinding is not practicable, it may be sufficiently smoothed to grind by very careful filing. In this, much care should be exercised not to file off more on one side of the disk than on the other. The final seating of the valve is always accomplished by grinding with pulverized glass or emery, using water or lard oil for a lubricant, water being preferable where there is not much surface to be cut away.

First oil or wet the seat and disk, then sprinkle over these a small quantity of the pulverized glass or emery. Place the disk squarely on the seat and revolve back and forth, bearing on it gently. Care should be taken not to press too hard in this operation, to avoid cutting scores or deep scratches in the seat or disk. Continue this grinding, adding small quantities

of the glass or emery occasionally, with sufficient lubricant to prevent cutting, till all tool or file marks on the seat and disk are ground off, leaving a smooth frosted appearance. After this, wipe the seat and disk off clean and dry, put a few drops of oil on the seat, and continue the grinding movement as before (using no glass or emery) until the frosted appearance of the face of the disk and seat disappears and these surfaces are smooth.

Gate Valves.—In reseating gate valves, the disk should be first draw-filed and scraped till each face is perfectly true. This may be ascertained by using a "surface plate," which is a smooth, planed true metal surface on which is smeared a small quantity of "marking material," such as thin ultramarine-blue paint or vermilion. After the visible unevenness has been removed and the faces scraped smooth, place the disk on the surface plate and move it back and forth a few times; this will cause the marking material to show high places which should be scraped. For this work a square-nosed flat, steel scraper should be used, and the operation continued till the marking material shows a good smooth bearing surface all over.

Some gate valves are made with composition seats and some with soft- or Babbitt-metal seats. The composition seats are detachable and are screwed into the body of the valve; where these are not too badly cut, scored, or worn, they may be repaired by filing and scraping till the disk is made to fit tight, which may be determined by smearing the disk with marking material and trying it in place. Should it be found necessary, in order to true them up, to take so much of the face off of the seats that the disk will strike the bottom of the valve before tightening on the seat, the seats may be taken out and thin liners placed behind them. Should the condition of these seats be such that they cannot be repaired by lining out and scraping, new seats may be made in a lathe and put in place. The same process of scraping and fitting should be followed

on valves with the soft- or Babbitt-metal seats. Should these, however, be in too bad condition to repair by scraping, the old seats may be melted out and new seats poured with melted Babbitt metal, which is done as follows: After removing the old seat, fill the bottom of the shell or body of the valve with stiff clay or putty and set the disk as when the valve is closed, leaving it a little high, to allow for scraping and fitting the seats; after this, fill in all space around the disk with the clay or putty, except the margin or ring which forms the seat on each side, and a gate or groove leading from the top down to the margin, through which to pour the metal; fit wooden plugs squarely against each face of the disk, driven into the body of the valve, being careful to have a bevel on the ends of the plugs to fit the taper of the disk, and then pour the metal. The final fitting, of course, is to be done by scraping.

Plug-Cocks.—In regrinding plug-cocks, the plug should be taken out and all cuts, scores, ridges, etc., removed by draw-filing, after which they are ground with pulverized glass or emery, using water or oil as a lubricant, much in the same manner as the process of grinding globe valves. Care should be taken not to file off or grind away too much of the plug or body of the valve, as this may let the plug down so far that the port or passage hole will become partly blind, which would retard the flow through the valve.

SOLDERING.

Soldering is the process of joining metals together with another metal which melts at a lower temperature. The alloys in most common use for this purpose are soft solder, composed of lead and tin, usually called by the simple term—solder; and hard solder, composed of copper, zinc, tin, silver, etc., usually known as spelter, and the process of joining metals with this is called brazing; it is usually used on brass and copper, where a stronger joint is required than can be made with (soft) solder.

SOLDERING WITH SOFT SOLDER.

The principal tool used in this operation is the soldering iron, which is a small billet of copper tapered at the end and with a handle attached; this tool must first be subjected to a process known as tinning before it can be used; to do this, heat it until it will melt solder (but not red hot), file on flat side at the point, for a distance of about an inch, until it is thoroughly clean, rub the filed surface on a piece of solder over which pulverized rosin has been spread, this acts as a flux and facilitates the adhesion of the solder to the clean copper, two adjoining sides thus treated are sufficient and the iron is ready for use.

The first operation in the process of soldering, is to thoroughly clean and tin the joining surfaces, which is done much in the same manner as tinning the iron; clean off all the grease, dirt and other foreign matter that can be removed by filing or scraping, after which clean the surfaces with muriatic acid before the solder is applied. The soldering iron being sufficiently hot to melt the solder, it is applied to a bar of solder, small quantities of which will adhere to the iron, and from which it is spread over the joining surfaces, using rosin as a flux.

Copper, brass or black iron may be prepared for soldering by an application of chloride of zinc to the surface after cleaning, a stronger joint is made, however, by tinning the parts as described above. Lead and tin do not require tinning to be soldered, but only need to be shaved clean, using rosin as a flux.

WIPING JOINTS.

The process of wiping a joint involves certain operations, which different mechanics will often perform in a slightly different manner, producing, however, the same and equally satisfactory results. And while the principle is necessarily the same, it has been observed that mechanics may have dif-

ferent ways of doing the same thing, according to circumstances or individual choice, in which experience and practice are the best guides.

An effort is here made to give the fundamental principles of this operation, at the same time, advising diligent practice and experience as a guide to success.

The process of joining lead pipes, or lead to brass or copper is called wiping, and is accomplished by forming a quantity of solder around the joint adhering to the adjoining ends of the two pieces; the solder used for this purpose is usually composed of two parts lead and one of tin.

In wiping joints on lead pipe, the ends are prepared by beveling one and cupping the other, having them fit neatly together to prevent the solder from running through to the inside of the pipe, which would obstruct the bore; the outside of the ends should be shaved clean and bright to such distance as the length of joint required, and to prevent tarnishing. This shaved surface should be covered with sheep tallow, which also acts as a flux; where the joint is required to end, a sharp line should be drawn by painting the pipe up to this point with soil, which will prevent the solder sticking any further than is required; shoe blacking makes a very good soil, graphite paint is also good; where a soil is not available, paper wrapped and pasted around the pipe will answer the same purpose.

The ends being prepared, they should be carefully secured in place so they cannot shift while the joint is being wiped, sufficient space should be allowed below and on each side of the joint to provide ample room for the movement of the hands in wiping.

A sufficient quantity of solder should be melted in the pot and placed within easy reach of the work; warm the wiping cloth and hold it in the left hand, forming a dish, or hollow, to receive and hold the solder falling from the joint, in order to heat the under side of it. Stir the solder well and dip from the pot with a ladle, pouring it over the joint and

wiping under the joint with the solder caught on the cloth, taking care to heat the parts uniformly all around until they are thoroughly tinned. When a considerable quantity is caught on the cloth, it should be worked around on the top; continue to pour on this, catching the surplus as before, and heating the under side with it.

When the solder around the joint has become plastic, and inclines to slide or drop off, if the surfaces are thoroughly tinned, if the pipe is hot enough to keep the solder plastic, and there is sufficient solder on the joint to make it up, then the pouring should be discontinued and wiping begun. The ragged edges of solder which have begun to set, should be first thrown off, then the edge of the cleaned parts that limit the ends of the joint are found, and the solder is formed into the desired shape, hollowing the cloth for that purpose.

In forming the joint all superfluous solder should be thrown off.

The joint is then finished by working around with the cloth from the bottom to the top on both sides, and finally by drawing the cloth lightly across the top.

When the wiping is finished, the joint should be cooled quickly by blowing a spray of water over it from the mouth, this saves time, prevents the solder from settling to the bottom of the joint, and adds to the appearance of the job by making it bright.

Heating the Solder.—Wiping solder should not be allowed to get too hot, and never red hot; a good practical test is to dip a piece of paper or soft pine wood into the melted solder, if at the proper temperature, it should scorch these articles to a rich brown, but not cause them to blaze.

Cleaning the Solder.—Should brass, zinc or antimony be put into wiping solder, it cannot be made to stick and it is useless until cleaned.

Solder may be purified by the following method, when it contains any of the above substances, or any foreign matter,

which causes it to work badly: Heat the solder to a dark cherry red, add a tablespoonful of sulphur, and stir briskly. This will cause the impurities to rise to the surface, and should be skimmed off, after which add a little rosin to assimilate the lead and tin again.

If there is too much tin in the solder, it will stick to the cloth and run off on the under side of the joint; if there is too much lead, it will be too coarse, and joints made of it are liable to be porous.

When the cloth scratches in wiping, it should be rubbed with a little powdered chalk or brick dust.

SOLDER.

Standard Specifications.

Material and Quality.—To be made from new tin and commercially pure new lead conforming to the latest issue of Navy Department specifications for same.

Kinds of Solder.—To be "half-and-half" solder, or "wiping" solder, as specified.

Composition.—Composition to be as follows:

(a) *Half-and-Half Solder:*

Lead and tin	Not less than 99.8 per cent total.
Tin	49 to 51 per cent.
Antimony	Not more than 0.10 per cent.
Zinc	None.

(b) *Wiping Solder:*

Lead and tin	Not less than 99.8 per cent total.
Tin	39 to 41 per cent.
Antimony	Not more than 0.10 per cent.
Zinc	None.

Marking.—(a) Half-and-half solder to be in bars of 1 pound and marked "half-and-half" in raised cast letters.

(b) Wiping solder to be in 1-pound bars or 1-pound pigs or ingots and to be marked "wiping" in raised cast letters.

BRAZING.

The parts that are to be brazed should be thoroughly cleaned of all grease or other matter which would prevent the spelter from adhering; and this may best be accomplished by filing the surfaces. Bind the parts firmly together with iron wire, to prevent warping out of place when heated, and have the whole well supported and firmly blocked upon the bench, or in the fire, as the case may be.

Sprinkle the spelter or hard solder on the seams, so that when it fuses or melts it will run into the seams; sprinkle powdered calcined borax over the spelter, and apply the blowpipe flame, first on the thickest part of the metal, because the whole work should be heated uniformly to the fusing temperature of the spelter. The heat is now slowly increased, being careful not to burn the spelter, till the metal becomes hot enough to fuse the borax, which will flow over the metal and spelter. The fusing point of the spelter is now almost reached, and with slightly more heating it will melt and flow into the seams, adhering to the faces of the joints. The spelter will spread, and go into every little space, if the metal is clean and heated uniformly.

The melting point of spelter may not differ more than 400° from that of the metal which is being brazed; therefore, great care should be taken not to overheat the metal; and unless the heat is uniformly applied, the work is likely to warp out of shape; or if the flame is concentrated on one spot for too long a time, a hole may be burned at that place.

In brazing metals which have a low melting point, the blowpipe flame should be removed the instant the spelter flows.

Brass tubing, and other metals which are very brittle when hot, should be allowed to cool off thoroughly before being taken from the bench or fire.

Brazing invariably softens the parts which have been heated, and the original hardness never returns after the metal cools.

Small articles may be conveniently brazed in a charcoal fire,

without using the blow pipe; in this case it is necessary to use a blast on the fire.

Heavy work is often brazed in a forge, in which case a good quality of clean coke may be successfully used; charcoal, however, is better.

Things to be Remembered When Brazing.—Have edges of seams well cleaned and bound firmly together.

Use a spelter that will melt at a lower temperature than the metal which is to be brazed.

Apply the heat uniformly, to increase slowly till the point of fusion is reached.

Have the spelter well fluxed along the seams.

When brazing pieces that have joints near, which have been brazed before, in order to avoid opening or melting these seams it is best to use a more fusible spelter or solder, such as silver solder, which melts at a much lower temperature than spelter.

PUMPING AND DRAINAGE.

The several systems of piping on ships of the Navy under the cognizance of the Department of Construction and Repair are spoken of under the general head of "Pumping and Drainage." These systems with their subdivisions are as follows:

Drainage;
- Main drainage;
- Secondary drainage;
- Sounding tubes;
- Air escapes;
- All flooding arrangements.

Fire system:
- Sanitary or flushing system;
- Fresh-water system;
- Scuppers system;

Tanks for sanitary and fresh-water purposes, not forming a structural part of the ship.

PUMPING AND DRAINAGE, PRE-DREADNAUGHT TYPE OF BATTLESHIP.

Main Drain.

To enable large quantities of water to be removed from the boiler and engine rooms, a main drain of wrought-iron or steel tubing or built pipes, about 15½ inches, inside diameter, is run from the forward boiler room to the main-drain suction valves at the centrifugal pumps in each engine room. A 15½-inch main-drain stop-check valve is located in each boiler and engine room. The main-drain valves are operated in the compartments they drain, about 30 inches above the floor plates, and also from berth deck in deck plates, and are fitted with indicators where operated.

In addition to the centrifugal-pump connection, the main drain will have a connection to each fire- and bilge- and auxiliary feed pump.

Secondary Drain.

Bilge Wells.—For properly draining the bilges of the compartments in the machinery spaces above the inner bottom, small bilge wells are located in the after end of each boiler and engine room near the center line.

Secondary Drain Pipes and Valves.—A secondary drain of wrought-iron or steel tubing, about 5½ inches, inside diameter, is run on each side of the center-line bulkhead, in the machinery space, from a manifold located on or near the forward boiler-room bulkhead, to a manifold on or near the after bulkhead in engine space, and is connected to each fire- and bilge- and auxiliary feed pump. Branches are led from this secondary drain to the bilge wells previously mentioned, and also to a manifold located on center-line bulkhead in engine room. The valves in manifolds, controlling these branches, are of the stop-check type, except the auxiliary drain valve in the auxiliary feed pump manifold connecting with the inner-bottom suction pipe, which valve is of the stop-lift

and check type, so that any pump connected to the auxiliary drain may be used to drain any inner-bottom compartment.

Bilge and Inner-Bottom Drainage and Flooding.—The inner-bottom compartments abreast machinery space, outboard of the fifth longitudinal, are not provided with means for drainage or flooding. These compartments are drained by hose through manholes.

Inner Bottom Within Machinery Space.—The inner-bottom compartments between reserve-feed water tanks and the forward dynamo-room bulkhead are drained and flooded by a single pipe, about 4⅝ inches in diameter, with branches leading to the after end of the different inner-bottom compartments. This pipe has a connection to one of the auxiliary feed-pump manifolds. The inner-bottom suction pipe also has a 3-inch connection to a sea valve for flooding, and is fitted with a stop valve at sea valve.

The inner-bottom compartments under engine rooms and abreast the reserve-feed water tanks are drained and flooded by about 4⅝-inch pipes led to a manifold on center-line bulkhead, to which the auxiliary drain is connected. The manifold located on center-line bulkhead has a 3-inch connection to the nearest sea valve, and is fitted with a stop valve at sea valve. All branches from the 4⅝-inch inner-bottom suction pipes in the machinery spaces are about 3 inches in diameter and fitted with stop, lift and check valves, suitably located near bulkheads and operated about 30 inches above floor plates, fitted with indicators where operated.

All valves in manifold on center-line bulkhead are of the stop, lift and check type, except auxiliary drain and sea-flood valves, which are stop valves.

Bilge and Inner Bottom, Forward and Abaft Machinery Space.—The inner-bottom compartments, forward and abaft the machinery space, are not provided with means for flooding.

The manifolds located on or near the forward boiler-room bulkhead, and on after engine-room bulkhead, control all

drainage forward and abaft the machinery space, except the inner bottom under dynamo room and the shaft alleys. The trimming tanks have a direct connection to their respective manifolds.

The extreme forward and after trimming tanks sluice by means of angle stop valves into their adjoining trimming tanks. These forward valves are operated on berth deck in deck plates. The after valves are worked from steering engine room and tiller room.

The chain lockers drain into the compartment below by means of a drain valve, stop-valve type, which operates from berth deck in deck plate. An independent suction pipe is led from the compartments into which the chain lockers drain to the manifold in forward boiler room.

Drainage Above Inner Bottom.—The lower dynamo room is provided with small bilge wells, fitted in a similar manner to those in boiler and engine rooms. A 3-inch suction is led from each of these wells to a $4\frac{5}{8}$-inch pipe connecting to manifold on forward boiler-room bulkhead. Each of these branches is fitted with a Macomb strainer at well and a globe stop-check valve at or near each well. The upper dynamo room is fitted with floor drains, stop-valve type, and empty into lower dynamo room below floor plates.

Miscellaneous Drainage.—The following compartments below the protective deck, viz.: Turret-handling room, upper dynamo rooms, steering engine and tiller flat, evaporator rooms, and the tank space, when fresh-water tanks are located on the platform deck, have floor drains, stop-valve type, to drain into compartments reached by the main drainage of ship. Where the trimming tanks are divided into upper and lower compartments, the upper compartment is fitted with a drain valve, stop-valve type, to empty into lower tank. These valves are operated from berth-deck plates. Turret foundations are fitted with drains discharging into drain pipes from handling room.

Hand Pumps.—Portable "handy-billy" pumps are carried on board with the necessary suction hose—fire hose being used for discharge—for pumping out compartments where no suction or gravity drain is fitted. Such compartments are usually the wing compartments under the armor passage, and small spaces at the outboard terminals of the protective deck. On some ships the handy-billy pumps have connections from the bilge and from the sea, discharging overboard by hose.

The bilge connections in this case are taken from the secondary drain or the manifolds forward in the boiler room and aft in engine room, and are fitted with a stop valve and a Macomb strainer at same. The sea connection is taken from the nearest sea valve and fitted with a stop valve at sea valve. The sea and bilge connections are led to a two-valve manifold on the berth deck, fitted with a connection for standard Navy hose, with cap and chain.

PUMPING AND DRAINAGE, DREADNAUGHT TYPE OF BATTLESHIP.

On account of the increased size of the later type of battleships, the introduction of the pump rooms, direct-connected electric drainage pumps, etc., some changes have been made in the larger details of the drainage systems of these vessels.

The minor details remain practically the same as are found in the preceding portion of this chapter, in which the system described applies, in a general way, to most ships now in service.

In the later types of battleships, the main drainage in the fire rooms consists of two 10-inch, direct-connected centrifugal electric pumps in each boiler room; these pumps are of the submerged type, and capable of discharging 3000 gallons each minute, against a head of 35 feet. The pumps have open suctions, and discharge through 10-inch sea chests; the motors are located on the third deck, and are controlled locally, and also from a point near the respective pumps.

For draining the engine and pump rooms, a 15½-inch drain pipe is run fore and aft in one engine room, connected with the circulating pumps, and with connections to the engine rooms and pump rooms where 15½-inch stop check valves are fitted.

All the main drainage valves are operated in their respective compartments, about 30 inches above the floor plates, and also in deck plates on the third deck.

Secondary Drainage.

The secondary drainage, forward section, has connection to a 7-inch, direct-connected electric centrifugal pump, having a 5-inch discharge through a scupper above the water-line, with a capacity of 750 gallons per minute under a head equivalent to 35 pounds pressure to the square inch. This pump is also connected to the forward flushing main, with suction from the sea.

Branches are taken from the forward secondary drain to inner-bottom compartments forward, except fuel-oil tanks, to the forward trimming and drainage tanks, and forward pump room.

In the forward boiler room a manifold is fitted, with connection to the fire and bilge pump in the forward boiler room, and with suctions in the forward dynamo condenser room and the forward boiler room. The secondary drainage, after section, extends from the after trimming tanks into, and through the port pump room and through the starboard pump room, the port and starboard drains being cross-connected.

The after secondary drain has connections to the fire and bilge pumps in the pump rooms the full diameter of their respective pump suctions.

Branches are taken from the after secondary drain to the forward and after ends of the pump and engine rooms, to the shaft alleys, double-bottom compartments, except fuel-oil tanks, and to the after trimming and drainage tanks.

The branches from the secondary drain dip into the wells, and each have a stop-check valve.

Macomb strainers are fitted in the after secondary drain, and in the suctions from the forward dynamo condenser room and forward boiler room, also in each branch from the amidships and after secondary bilge drains, located between the stop valve and the suction.

Valves in the secondary drains, and in branches to bilge wells and double-bottom compartments in way of machinery spaces, are operated 30 inches above the floor plates.

Valves controlling suctions forward of, and abaft the machinery alleys, are operated at the valve and on the third deck in valve plates.

Valves located in the shaft alleys are operated at the valve only.

Valves controlling forward trimming tank suctions are operated from the third deck, and those controlling after trimming tank suctions, from the steering flat.

There are two drainage tanks, one forward and one aft, into which floor drains are led from turret-handling rooms, upper dynamo room, steering room, tiller room, torpedo rooms, etc.

Chain lockers drain into the forward drainage tank through a perforated plate fitted in the second platform, and a drainage tank below the platform.

The forward and after drainage tanks are used for the torpedo-tube drainage.

Provisions are made in the pump rooms, for indicating, either by over-flow pipe or other approved means, when the drainage tanks are nearly full.

On the modern dreadnaught type of battleships, the forward secondary drainage consists of a suction manifold in forward pump room, fitted with stop-check valves to independent suctions from bilge wells, which are located in the inner bottom plating of pump room and compartments forward; a suction

also being provided from this manifold to the forward drainage tank. Turret foundations, handling rooms, chain lockers and torpedo room are fitted with gravity floor drains connected to this drainage tank, and these floor drains are provided with stop valves. A ¾-inch overflow pipe is fitted from forward drainage tank to pump room to indicate when the tank needs pumping.

No after drainage tank is fitted on the modern dreadnaught type; all compartments in the after section drain directly into the bilges, which are connected to, and pumped out by, the after secondary drainage system.

AIR TESTING COMPARTMENTS.

New Construction.—While ships are being constructed air tests are made on compartments both for strength tests and tightness tests. These tests are made under the supervision of superintending constructors of the Navy, and are carried out in rather more detail than the subsequent periodical tests which are made after ships are commissioned.

The following is taken from the Gen al Specifications for Building Ships of the U. S. Navy, edition of 1917:

Detailed instructions covering the various tests will be furnished by the superintending constructor.

D-1-b. Testing of Compartments by Water and Air.—These tests shall comprise:

(A) Strength and Tightness Tests.

(B) Completion Air Tests for Tightness.

(A) Strength and Tightness Tests.—These tests shall be given to all compartments within the limits set by the vessel's detail specifications and to the test head given therein. These tests shall be made by water or by air in accordance with the requirements specified below, unless specifically modified by the vessel's detail specifications:

The following compartments shall be tested by water:

I. All fresh-water and peak tanks.

II. Fuel-oil tanks, under the same conditions as are specified in IV below, and Section D-1-c, herein.

III. At least one engine room and one boiler room.

IV. At least one compartment representing each kind of structural construction, height, depth below speed-trial water-line, etc. The one chosen shall be the one which may be expected to be the least efficient for withstanding the test pressure, with particular reference to wide spacing of stiffeners, cut stiffeners, difficult conditions of bracketing, etc.

If the compartment tested by water fails to pass a satisfactory strength and tightness test or an unsatisfactory amount of permanent set is caused by testing, additional stiffening, etc., shall be provided by the contractors, and a retest shall be made by water as necessary to demonstrate compliance with the specified requirements.

The following compartments may be tested by air in lieu of water:

V. Fuel-oil tanks or compartments which are not required to be tested by water and which are similar in construction to typical compartments tested by water in regard to height, depth below speed-trial water-line, etc., may be tested by air if the contractors so desire, in which case the air pressure used shall be equivalent to the water pressure at the mid-height of the compartment which would be caused by the specified water head for the compartment; but in no case shall the air pressure be less than 5 pounds.

VI. All compartments not tested by air and required to have a strength and tightness test shall be tested by water.

In case the typical water-tested compartment fails, and additional stiffening becomes necessary to enable it to pass the water test, equivalent stiffening shall be added to similar compartments approved for air tests before such tests are made.

If a compartment tested by air fails to pass a satisfactory test, or an unsatisfactory amount of permanent set is caused by the testing, additional stiffening, etc., shall be provided by

the contractors and a retest shall be made by air as necessary to demonstrate compliance with the specified requirements.

The tightness of such compartments as are tested by air shall be at least equivalent to that required of spaces tested by water. The tightness shall be demonstrated by the ability to hold the air pressure with a drop in a given time not to exceed that which would occur in a satisfactory water-tight compartment.

In the performance of the air test, as referred to above, the flats or decks forming the upper boundary of the compartments may, after having been found to be of satisfactory strength at a pressure equivalent to that which would be caused by the specified head of water, be shored or backed by air pressure for the remainder of the test.

Conditions applicable to (A), strength and tightness tests: (1) The above tests, either by water or air, in compartments adjacent to the outside plating shall be made before launching, unless otherwise specified or approved.

(2) Where it is not practicable to complete the work on the outside plating, as in the case of plating in the wake of the armor belt, the tests of such compartments may be made after launching.

(3) Structural work should be completed and shall not be painted other than with a priming coat of paint in the way of water-tight spaces. This paint shall be thoroughly dry. In oil-carrying spaces the structural work may have a protective coat of non-volatile oil. Any paint or oil coating in the way of joints which may be considered by the superintending constructor liable to interfere with a satisfactory test of metal to metal tightness shall be scraped off.

(4) Permanent doors, hatches and manholes shall be in place.

(5) Metal work and fittings required to be attached to the boundaries of compartments shall, as may be required by the superintending constructor, be in place, riveted and calked.

(6) The tests shall be performed under water conditions of temperature, etc., which shall avoid interference from freezing, excessive sweating, etc.

(7) Compartments adjacent to the one being tested shall be thoroughly dry and every facility shall be afforded for inspection and detection of leaks.

(8) The same degree of tightness shall be obtained for doors, hatches, or other parts of fittings as for structural work, except that for doors with metal to metal bearing surfaces, a leakage of 2½ gallons per minute will be accepted.

(9) Shaft tubes shall be tested to a pressure determined by the mean trial draft of the vessel as follows:

	Pounds.
Draft less than 10 feet	15
Draft 10 to 20 feet, inclusive	20
Draft over 20 feet	30

(10) Special water-tight work not covered in the above shall be tested to the satisfaction of the superintending constructor.

(11) All cofferdams above the deck next above the speed-trial water-line shall be tested with water under a head of 4 feet above the top of the cofferdam.

(12) Compartments cross-connected with equalizing pipes may be tested in pairs or separately. The equalizing pipes must be included in the test.

(13) All compartments carrying water or oil shall be absolutely tight under the water or oil tests.

(14) The injection of red-lead putty and oil-stop compounds to obtain water, oil and air tightness, respectively, in ordinary structural work shall not be performed except as authorized by the superintending constructor. In case, however, of two or more courses of plating, as in protective decks, etc., such injection or insertion of red lead or other material may be made as necessary, subject to the approval of the superintending constructor.

(15) Special care shall be taken to secure absolute water-tightness of all flats, and coamings bounding them, on which tiling is to be laid, and these shall be tested both by hose and by flooding to the height of the coaming, such test to be made before the tiling is laid and before any paint, cement, or other coating is applied. All blocks for securing fixtures in such places shall be in place when the test is made.

(16) Water-tight members not tested in connection with compartments, including decks, bulkheads, trunks, gunport shutters, turret watersheds, air ports, side lights, hatchcovers, doors, turret and conning-tower bucklers, etc., shall be tested by playing a hose on them or by such other means as may be considered necessary by the superintending constructor to insure that they are satisfactorily water-tight.

(17) When a compartment is ready for test, the superintending constructor shall be notified and the work of testing shall not proceed until he or his representative shall have inspected the compartment and authorized proceeding with the test.

(18) Where, in the development of arrangements, it is considered by the contractors to be desirable to omit any compartments from the test requirements as stated in the foregoing or to make other special arrangements, the matter shall be submitted to the bureau.

(19) The water or air test pressures shall be held for such a period as is considered necessary by the superintending constructor to develop all leaks.

(20) All tests shall be made with fresh water. The use of salt water is prohibited. The water heads given in the detail specifications are for fresh water.

(21) Care must be taken to clean by hosing down, or as necessary, all compartments where soap and water or other solution may have been used with the consent of the superintending constructor in searching for air leaks.

(B) Completion Air Tests.—In addition to the tests referred to in the foregoing there shall be a completion air test made for each compartment within the limits set by the vessel's detail specifications.

Completion air tests are builders' tests and are not to be confused with periodical air testing in service, the fittings for which are covered by Section U-18-b, herein. The periodical air-testing fittings will, however, be used for the purpose of conducting the contractors' completion air tests in order that there may be complete and comprehensive tests of periodical air-testing apparatus before delivery of the vessel. No test other than the above will be required for periodical air-testing apparatus.

Completion air tests should only be made after all connections to the boundaries of the respective compartments have been fitted complete under the contract, including voice tubes, piping, valves, electrical leads or other fittings, which penetrate or are attached to the said boundaries. Any defects which develop shall be made good by, and at the expense of, the contractors. Should any work be performed by the contractors on the boundaries of a compartment after the completion test has been made, an additional test shall be performed unless waived by the superintending constructor.

The pressure of the completion tests, which are primarily for the purpose of insuring that the various fittings are satisfactorily tight where they pass through boundaries of the compartments, and that no accidental openings have been made, shall, unless otherwise specified, be equal to the water test pressure at the deck bounding the top of the compartment under test, but shall in no case be less than 5 pounds per square inch.

In the case of fuel-oil tanks on torpedo-boat destroyers and on other vessels if directed, this completion test shall be made before the oil is placed therein for the 24-hour test, as specified in Section D-1-c, herein.

In these completion tests, however, compartments bounded by flats, over which auxiliary machinery is installed, where special provision has been made for allowing the compartments beneath to be flooded without throwing the machinery out of alignment, shall be tested to the pressure corresponding to the head of water at the flat on which the machinery is installed. In such cases the machinery shall be satisfactorily operated for two hours while the maximum pressure is on the compartment below, to demonstrate that this pressure does not cause any lack of alignment.

The arrangements made for completion air tests of compartments shall be such as will permit periodical air tests to be made of the same compartments by the ship's force after delivery of the vessel.

D-1-c. Fuel-Oil Tanks.—Each compartment for the stowage of fuel oil shall be tested by water for strength and tightness under the head specified in the vessel's detail specifications, or by air, if this is expressly given as an alternative therein for oil tanks, as described in Section D-1-b, herein.

Each compartment shall also be given a completion air test, as described in Section D-1-b, herein.

On torpedo-boat destroyers, after the strength and tightness tests and the completion tests have been made, all fuel-oil tanks shall be tested by filling with fuel oil of the specific density not over 0.97 nor less than 0.85, referred to water at maximum density at such a head as will produce the same maximum pressure as that given by the water under the head specified therefor, and this oil pressure shall be maintained for at least 24 hours, and the compartments must be absolutely tight under this test.

On other vessels, unless specified to the contrary in the vessel's detail specifications, 10 per cent of the oil tanks, but not less than 2, shall be tested with oil, as specified above for torpedo-boat destroyers. The compartments to be so tested will be selected by the superintending constructor.

The strength and tightness tests shall be made before launching. The completion air tests and the oil tests may be made after launching if the contractors so desire. The tests with oil shall be so conducted that danger of explosion from gases before, during and after the test is avoided.

All piping under the Bureau of Construction and Repair, connected with the fuel-oil system, shall be tested after installation, with air, to a pressure of 50 pounds per square inch.

Valves in the fuel-oil system shall be subject to a test pressure of 100 pounds per square inch before installation.

On torpedo-boat destroyers and other vessels as may be specified in the detail specifications, all piping, including vent and overflow pipes, shall be tested during the oil test of the fuel-oil tanks by being completely filled with oil of the density specified above and must be absolutely tight under this test; the oil shall remain therein for 24 hours.

U-18-b. Periodical Air-Testing Fittings.—For the completion air test and for periodical air testing there shall be provided to each compartment below the lowest complete watertight deck, within the limits set by the vessel's detail specifications, a connection in the form of a valve or some other approved means, so that the compartment can be put under air pressure, the pressure being that specified in Section D-1-b, herein. These fittings are not only for the purpose of affording means of conducting the completion tests of the compartments specified for such tests, but are to be permanent fittings in order that the ship's force may, from time to time, conduct periodical air testing for all compartments so fitted, and after repairs are made for the purpose of determining their tightness. No extra piping will be required in connection with the completion test or the periodical air testing, the compressed air necessary for testing compartments being taken off the gas-ejecting system by means of a portable compressed-air hose. With this end in view, the gas-ejecting system shall be provided with valves so located that the shortest practicable lead

may be obtained for supplying compressed air to the various compartments. Both the fittings on the gas-ejecting system and those of the compartments shall be suitable for connecting the Navy Department's standard compressed-air hose thereto.

Where a pipe, voice tube or ventilation duct terminates in a compartment required to have a completion air test or subject to periodical air testing, a fitting shall be provided at the compartment, so that the ends of the pipe, voice tube or ventilation duct can be closed and made water-tight, thereby making the sides, top and bottom of the compartment completely intact. This fitting shall be provided within and shall be operated from the interior of the compartment, where practicable. The fitting for closing shall, in general, be a valve of type to be approved by the bureau. In double bottoms, inaccessible spaces, fuel-oil tanks, feed-water and other tanks, the closing arrangement shall be as approved. The purpose of the fitting is, first, that the compartment itself can be made completely water-tight; second, to prevent the compartment from being flooded from another compartment when the latter has been damaged.

Ventilator openings in compartments for which periodical air testing is specified in the vessel's detail specifications shall be provided with air-tight covers, so that these compartments can be given a completion test, as well as to make it practicable to conduct periodical air testing at a future date. The number of covers provided need only be such as to permit one of the compartments being tested at a time. All uptake openings in boiler spaces which may be required to be periodically air tested shall be provided with portable air-tight covers for banking off same. The number to be supplied by the contractors shall be sufficient for the boiler space having the greatest number of uptakes, if the covers can be made interchangeable to all uptakes. If not, the number shall be sufficient to provide means for banking off any and all uptakes.

The following is not a part of above general specifications:

From records kept of the above tests, made while the ship is under construction, a schedule of instructions for air testing is compiled and furnished to each ship fitted with the air-testing system; this schedule gives a list of all compartments tested, together with the respective pressures applied to each compartment in the completion air test. The pressures given in the above-mentioned instructions should never be exceeded when making subsequent periodical tests.

Periodical Air Tests of Ships in Commission.—The object in air testing compartments on ships in commission, is to ascertain if the water-tight integrity of the ship is being maintained under service conditions; that is, if any conditions have developed since the last test, which would cause leaks if compartments should be flooded. On ships in commission, the compartments should be given the air test about every 12 months.

Air-Testing Equipment.—The air-testing system consists of test stations, conveniently located so that the shortest practicable leads of air hose may be connected with the gas-ejecting system to the various compartments for testing. There are usually about 10 of these stations on a battleship.

The equipment of a test station consists of the terminal of a connection to the compressed air (gas-ejector) system, from which pressure for testing is obtained, and which usually carries a working pressure of 100 pounds per square inch, on the later ships 150 pounds per square inch; this terminal is fitted with a stop valve for shutting off pressure and a pressure gage to show the pressure in the compressed-air system at all times while using it. A portable "test set" is provided, which consists of a mercury gage, a reducing valve capable of reducing the pressure from the maximum in the compressed-air system to the pressure at which the compartments are to be tested, a relief valve set at a slightly less pressure than the reducing

valve and a stop valve; all of these are connected and fastened together on a foundation board so that they may be conveniently carried from one test station to another, and the combination is called a "test set." A mercury gage is used because of its sensitiveness in showing the slightest variation when falling pressures against time are to be observed and recorded.

The test set is connected by hose to the test station terminal with the reducing valve next to the terminal or air main, the other end of the test set, on which is a stop valve, is connected by hose to the compartment to be tested; the next operation is to test out the reducing valve, relief valve, etc., before admitting air to the compartment as follows: With stop valves on both the terminal connection and test set closed, and with working pressure on air main, open the stop on terminal connection, admitting pressure to reducing valve and relief valve of test set, observe at what pressures these function, as shown by the mercury gage, and make adjustments accordingly to suit the pressures at which the compartment is to be tested. With the compartment now properly closed, the air may be turned on for the test.

Preparing Compartments for Testing.—In compartments fitted for air testing, the ventilation pipes, air escapes, voice tubing, etc., are provided with the necessary valves or fittings for making these various systems tight for the test. These fittings are located at, and when practicable inside of, the compartments; much care should be exercised to make sure that all such fittings, together with all doors, hatches and other openings have been properly closed before the air is turned on. The schedule of instructions is now consulted to ascertain the pressure to which the compartment is to be subjected; this information is the principal guide in the conduct of the test.

Compartment Under Pressure.—The air should be admitted to the compartment slowly and the mercury column carefully observed to check the accuracy of the reducing valve, so that an

excess in pressure may not be admitted to the compartment, the stop valves always being available to prevent this in case the reducing valve does not function properly. When the required pressure has been reached a man should be stationed at the cut-off valve, to maintain this pressure, while examination is being made of all doors, fittings, etc., and to locate any leaks which may have developed. If bad leaks are discovered, after these are rectified the pressure should be applied again to take the fall of pressure against time. In this case the air should be held at the required pressure for several minutes before the fall is taken and timed, this being done to obtain constant temperature conditions. The fall of pressure against time is taken from the time the supply pressure is shut off, the compartment being under the required test pressure; 15 minutes is usually sufficient to determine the tightness of a compartment. On ships which have been furnished with this data, the test pressure and fall against time for satisfactory tightness is given in the schedule of instructions for each compartment; when this information has not been furnished, and is not available, a test pressure of 5 pounds per square inch, with a fall of from one-eighth to one-half pound in 15 minutes, according to the size of compartment and number of doors, hatches and fittings involved, would indicate satisfactory tightness. To avoid structural damage by excessive pressure, when the original test pressure of a compartment is not known, the pressure applied should, in no case, exceed 5 pounds per square inch, this being considered sufficient to demonstrate the tightness of all boundary connections, doors, hatches and other fittings.

Record.—A careful record should be kept of all compartments tested, including date of test, pressure to which tested, fall of pressure against time, location, nature and cause of all leaks discovered, etc. Reference to this record at future tests will show to what extent the water-tightness of each compartment is being maintained.

Causes of Leaks.—The following are some of the principal causes of leaks which may be expected to be found on ships in commission:

(a) Water-tight doors, hatches, manholes, scuttles, etc.: The gaskets and packing around dogs deteriorating and worn from use, also buckling and warping of doors and hatches; wedges of dogs worn and dogs out of adjustment so that doors and hatches are not drawn down tight.

(b) Screw holes left open in decks and bulkheads: Small fittings are sometimes removed and the screw holes left open or the screws replaced without being made tight. When making alterations in storerooms or other compartments, great care should be taken to tightly plug all screw holes and other openings before building in shelving, laying linoleum, etc. When air tests are being made leaks are often found in such places.

(c) Stuffing boxes of electric cables: Packing defective or deteriorated.

(d) Stuffing boxes of moving shafts, such as propeller and steering gear shafts, operating rods to valves, etc., which require running fits: Some leakage may be expected from stuffing boxes of this kind, and such leakage will become excessive if the packing is much worn or deteriorated.

(e) Stuffing boxes around piping: Air and water-pipe stuffing boxes are easily kept tight, but these joints around steam pipes are likely to leak, on account of the constant heat and slight movements, due to expansion and contraction, drying out and wearing the packing.

(f) Voice tubing: Stuffing boxes do not give much trouble and can be made tight, but the mouth pieces and sleeve joints often leak, and these should be carefully examined before each test and overhauled where necessary: Sleeve joints may be made tight by wrapping well with electric tape and shellacking over the tape.

(g) New work on which calking has been done: Careful examination of all rivets and calking, portions of seams may be left uncalked or the work poorly done; most leaks requiring correction can be detected by sound or feel; and by the application of soap water along seams, the slightest escaping of air will be disclosed by the forming of little bubbles.

An air test should be made immediately after the completion of any repairs or alterations to a compartment, or any fittings affecting its water-tightness, in order to discover any leaks which may have been left; and a job of this kind should not be considered complete until it is shown by test that the compartment is satisfactorily tight, in accordance with the test pressure and fall of pressure against time, as required, and given in the schedule of instructions, for that compartment.

SOUNDING TUBES AND AIR ESCAPES.

Sounding tubes of wrought iron, galvanized, 1½ inches in diameter, are fitted to each inner-bottom compartment, provided with drainage connections, to reserve-feed water tanks in inner bottom, to trimming tanks, and to all principal compartments in hold, forward and aft of the inner bottom, whose outer sides are formed by the outside plating. Care is taken to protect the bottom of each compartment against injury from the sounding rod. Sounding tubes in engine, boiler and dynamo rooms end about 42 inches above floor plates, and are fitted at top with a gate valve; all other tubes end at the berth deck in deck plates, except those in after trimming tanks, which will end in valve at steering engine flat. All inner-bottom and trimming-tank compartments which are provided with flooding arrangements, are fitted with air escapes of wrought iron galvanized pipe 1¼ inches in diameter, which will extend above the water-line. For inner-bottom compartments provided with drainage only, the sounding tubes will act as air

pipes. Air escapes and sounding tubes have flange connections at decks, bulkheads and in inner bottoms. Other connections are made with brass unions.

SOUNDING-TUBES AND AIR-ESCAPES IN FUEL OIL COMPARTMENTS.

Where sounding tubes are fitted in fuel-oil compartments, they are carried above the lowest complete water-tight deck, and where practicable, are carried to the weather deck. Unless combined with air escapes, they are fitted with locked gate valves to prevent any leakage of oil or gases, when under possible pressure, caused by the height of the overflow pipe.

Sounding tubes for oil compartments are never terminated in fire rooms, magazines, projectile rooms or handling rooms.

The air escapes are led to the open weather deck, where they are fitted with an automatic valve allowing ingress and egress of air, and preventing ingress of water. Close mesh wire gauze is fitted between the flanges of the air escape pipes, above the level of the top of the overflow pipes, and also around the automatic valve. These air escape pipes have a clear opening valve fitted just below the level of the protective deck.

When the oil-filling arrangement includes a relay tank, the individual air escapes from the fuel-oil compartments lead to this tank instead of to the open deck, and are arranged to serve as overflows into the relay tank. A single air escape pipe of ample size, with automatic valve, is led from each tank to the weather deck.

MAGAZINE AND TRIMMING-TANK FLOODS AND SEA-CHESTS.

All valves and cocks in connection with magazine and trimming tank flooding are of composition. All sea valves are of the stop-valve type, spindle-guided. On the latest vessels the trimming tanks are flooded with fire hose, no sea valves being fitted for this purpose.

A composition strainer, perforated with $\frac{5}{8}$-inch diameter holes, having a collective area of not less than twice the area of the valve, is secured to the lugs on valve casting at ship's side by manganese-bronze studs, nuts and split pins, the ends of studs to be inside the line of the outside plating and the studs not to penetrate through lugs.

Rolled-zinc or mild steel protectors are fitted around openings at side of ship. The trimming tank sea valves, on such vessels as are fitted with them, are located outside of the trimming tank and just above platform deck. All sea valves are fitted with a 3-inch spare connection.

A stop valve, globe or gate type, is fitted immediately adjacent to each sea valve, and is operated at valve and also on berth deck in deck plate. All magazine floods $4\frac{1}{2}$ inches in diameter and above are fitted with gate valves; all floods under $4\frac{1}{2}$ inches in diameter are usually fitted with plug-cocks, cocks with one end flanged, the other end with a screw end to suit testing cap. All magazine-flooding valves and cocks are located in magazine about 30 inches from deck or grating, and are operated at valve and on berth deck in deck plates, and fitted with arrangements for locking them securely and for indicating when they are opened or closed. Air escapes are provided of reliable size to allow the air to escape freely from the magazines when flooding; these pipes are led up to berth deck plates for the flood-cocks or valves, so that when opening the flood-cocks or valves from berth deck the air escape is also necessarily opened. The air escape pipes are also used as overflow pipes.

All magazine piping is of copper or brass with composition flanges or of galvanized steel tubing with forged steel flanges.

Where the head of water is not sufficient to properly flood any of the magazines from the sea, they are flooded from the fire main, as specified under fire main. Each trimming tank has a 3-inch flooding connection from the sea; these connections are of copper pipe.

The ends of all inner bottom and bilge suction pipes, not leading to bilge wells, are fitted with wrought-iron box strainers, galvanized; the tops are in halves and hinged to permit of access for cleaning and painting. Strainers are perforated with $\frac{5}{8}$-inch diameter holes having a collective area of twice the area of the pipe, and are secured to pipe or the adjoining work.

FIRE SYSTEM.

The fire main on battleships is usually of 6-inch steel tubing, lead lined, worked under the protective deck nearly the entire length of the ship, and running on each side of the ship throughout the length occupied by the boilers, machinery and magazines, but not through any magazine space; and where practicable leads are kept out of coal bunkers and chain lockers. The fire main is divided into six systems, viz.: port and starboard, forward and after, and forward- and after-magazine systems. The port and starboard systems consist of that portion of the fire main throughout the machinery and magazine spaces, and is cross-connected at forward and after ends, forming a circuit to which all the fire pumps are connected, viz.: the fire and bilge pumps and the auxiliary feed pumps. The starboard pumps connect to the starboard system, and the port pumps to the port system; and in cases where the pumps are on one side of the ship, they are connected to both port and starboard systems. The only valves in this circuit are two in the forward cross-connection, and two in the after cross-connection. The other systems are branches from this circuit and are taken from between the cut-out valves in cross-connection, mentioned above. The forward system leads to the forward riser; the after system, to the after riser; and the magazine system, to the magazines on upper platform, viz.: those that cannot be properly flooded from the sea. Where the magazine systems cannot be taken from the cross-connection referred to, an additional cross-connection is made to accommodate these

systems. The fire plugs in handling rooms and the gun-washing device are included in the magazine system. A valve is located in each system near the cross-connection to cut out same. Where an additional cross-connection for the magazine system is required, a cut-out valve is fitted at port and starboard mains and the branch to the magazines is taken from between these cut-out valves in the cross-connection. All valves controlling systems are operated at valves and on berth deck in deck plates.

A plug is fitted in each engine and fire room; the branches supplying these plugs are dropped from the main.

A plug is provided for each handling and passing room. The plugs on platform decks and in ammunition passages abreast the machinery space are taken from the main and are so located that they may be connected by two 50-foot sections of hose if required, and are also placed in the vicinity of hatches to hold or store rooms, in order that they may be available for these spaces. A plug is located in the steering-engine compartment. In general, the plugs throughout the ship are located at distance not greater than 100 feet apart. Risers are taken up port and starboard sides from their respective systems, supplying plugs on each deck throughout the length between the forward and after turrets, making in all about five risers in duplicate. Forward and aft of these turrets, single risers are taken up to the main deck from the forward and after systems, supplying plugs on each deck. The risers within the superstructure lead to the uppermost deck, except the forward and after risers, which continue to the bridges. Each riser is fitted with a cut-out valve below the protective deck. Risers supplying five plugs have a cut-out valve above the second and fourth plugs; risers supplying four plugs have a cut-out valve above the second plug; for risers supplying three plugs or less, the cut-out valve below the protective deck is sufficient, unless a long lead of pipe intervenes, when an additional cut-out valve

is fitted. In addition to valves at pumps, a cut-out valve is fitted in all pump risers at or near the main, and is operated at valve on berth deck in deck plates. All risers taken up in the vicinity of the boiler and engine enclosure lead up within same. The midship ready service magazine on upper platform deck is flooded by hose from the nearest fire plug on the berth deck through an approved lock deck plate, and a brass pipe 3 inches in diameter is led from each of these magazines to the deck plate. Valves are located in the magazines about 30 inches from the deck, and are operated at valve and on berth deck in deck plates, and fitted with an arrangement for locking them securely, and for indicating when opened or closed. The deck plates of all magazines, flooded from the fire main, are used as air escapes and overflows. The fire main has a by-pass connection to the flushing main of the same diameter as the flushing main, and fitted with a cut-out valve; this connection is made forward. A connection for flushing ash chutes is taken from the nearest riser and fitted with a valve at chutes.

A connection for gun-washing device is taken from the fire main in the lower handling room and fitted with a cut-out valve. In addition to the relief valves at pumps, a relief valve set at 100 pounds pressure is fitted in main, forward, near the seamen's head, and, if practicable, to discharge into soil pipe. All plugs on berth deck and above are about 13 inches from top of each deck to center of each valve. All plugs below berth deck are dropped from the main and are about 5 feet above deck or floor plates. All fire-plug couplings are for $2\frac{1}{2}$-inch hose, fitted with standard Navy thread, seven threads to the inch, and are also provided with screwed cap. All valves on fire main are Chapman gate valves or their equivalent, and are of composition, inside screw, composition hand wheels, with arrows cast on to indicate the direction of opening. All valves except hose valves are fitted with indicators, to show when valves are open or closed. All fire plugs are numbered from

one up, even numbers on port side, odd numbers on starboard side. The valves of the fire main have label plates designating their use, riser valves designating the plugs they cut out, cut-out valves designating the systems they cut out.

Joints or flange connections should have gaskets of $\frac{1}{16}$-inch gum, with two insertions of cloth; those at bulkheads should have canvas and red lead. All fastenings are made with wrought-iron bolts and nuts; fastenings at bulkheads and metal decks are fitted with washers and hemp grommets. Joints through decks are made with two layers of No. 10 canvas and red lead, and secured by wrought-iron bolts and composition nuts; nuts are on top side of deck.

Joints throughout wood decks are made with two layers of No. 10 canvas, and casting embedded in white lead.

According to the latest specifications, steel tubing galvanized and lead-lined, is used instead of copper or brass pipe, for all sizes above $1\frac{1}{2}$ inches, in fire mains, flushing systems, pump suctions, magazine and trimming tank flood pipes, floor drains above lowest complete water-tight decks (except torpedo vessels), drains from plumbing fixtures, and all services where salt water is used.

For sizes under $1\frac{1}{2}$ inches, wrought-iron galvanized pipe, lead-lined, or copper, tinned, with screwed fittings, are used.

On ships now in service, having the above systems made of copper pipe, the old copper pipe is being either lead-lined or replaced with the lead-lined steel tubing.

SANITARY AND FLUSHING SYSTEMS.

Discharges from Rooms and Floor Drains.—The compartments above the protective deck which are not reached by scuppers are drained by handy-billy pumps and hose. Spaces such as wash rooms, shower baths, crew's water closets, galley beds, etc., are provided with floor drains. The discharge from the fixtures and floor drains in the various rooms on the gun

deck are overboard above the cofferdam. The fixtures in bath rooms, water closets and urinals aft on berth deck discharge overboard above berth deck. The firemen's wash room and other wash and bath rooms on the berth deck, in the vicinity of the machinery space, drain into the outboard delivery pipes, near top of same; these drains are fitted with a steam connection for blowing out same, and the valve controlling steam is operated at the valve and on berth deck in deck plates. Water closets, when located on berth deck abreast cofferdams, are of the pump type and discharge into scuppers just above the cofferdam. The discharges from urinals and water closets are not connected to the drains from the other fixtures, or the floor drains of the various rooms, except at the outboard end of same; and in no case will the discharge from the water closets or urinals be connected with the ship's scuppers, but independent soil pipes are fitted for this purpose.

Where location on berth deck, of bath rooms, shower baths and lavatories, will not admit of drainage into the outboard delivery pipes without long leads of piping, or of a direct gravity discharge overboard, they are fitted with small hand pumps arranged to discharge above cofferdam. Pantry sinks and sinks in chief petty officers' quarters drain overboard by gravity, when this is practicable without providing special drain openings through armor; otherwise they drain into buckets. All drains and discharges are of brass pipe, with composition fittings, and fitted with all necessary stop valves, check valves, strainers, traps, cleaning plug, etc., to prevent water or odor from returning to the rooms. Great care should be taken to keep all connections throughout this work thoroughly water-tight, and that all pipes are properly supported.

Flushing or Salt-Water Main.—The flushing main is of copper pipe about 4 inches in diameter, treated by the "Sabine process," or tinned, and is supplied by a connection from the

distiller circulating pump; a by-pass from the fire main to the flushing main is made forward near the seamen's head. A main 5 inches, inside diameter, is run under gun deck from the by-pass from the fire main, forward, to the vicinity of the transverse armored bulkhead, aft, and from thence to 2½-inch diameter main continues under berth deck in slope at side of ship; these mains supply all the necessary spaces.

A cut-out valve is fitted in the flushing main on each side of the discharge from the distiller circulating pump and also in the riser, at or near the main. The by-pass forward, between fire main and flushing main is fitted with a cut-out valve.

All wash rooms, bath rooms, shower baths, water closets, urinals, galleys, pantries, laundries, slop hoppers and such additional connections, are supplied with salt water from the flushing main. Branches fitted with faucets for bucket use are dropped from the main in convenient locations, aft on berth deck and forward on gun deck.

All branches taken from the flushing main are fitted with cut-out valves at or near the main.

A 3-inch relief valve, set at 15-pound pressure, is fitted to the flushing main near the seamen's head, to discharge into water-closet troughs, if practicable.

All salt-water pipes above 1½-inch diameter are of copper, sabined; pipes 1½-inch diameter and below are of copper, tinned. All pipe castings are of composition, and treated by the same process as the flushing main.

Zinc boxes are fitted in main line of flushing main, under gun deck, spaced about 20 feet apart.

On the later battleships, the flushing mains have been enlarged somewhat, being now 6 inches in diameter, and lead-lined steel tubing is used instead of copper pipe.

On these vessels an independent system is fitted for the crew's water closet and wash room spaces on the gun deck aft. The system is supplied by two direct-connected centrifugal

pumps, with capacity of about 500 gallons per minute each. The pumps have direct connections to sea valves, and their discharges are connected in a " Y " casting from which a single pipe is led to the crew's water closet and wash room on the gun deck.

This independent system has by-passed connections from the fire main and flushing main.

FRESH-WATER SYSTEM.

Fresh-Water Main.—The fresh-water main is of wrought-iron pipe, galvanized, 3 inches, inside diameter, and runs under gun-deck beams, from the reservoir tanks, forward, to the vicinity of the transverse armored bulkhead, aft; from thence a $2\frac{1}{2}$-inch main continues under berth deck in slope at side of ship to the junction of the after electric pump discharge; from thence aft, a 2-inch main is led to the auxiliary fresh-water tank under berth deck. The main between the electric pumps is used as a suction and discharge for these pumps, and is arranged to meet the requirements specified for these pumps; the necessary cut-out and check valves are fitted. Branches are taken from this main to supply all spaces requiring fresh water, including ice machine and faucets conveniently located; each branch is fitted with a cut-out valve at main. The fresh-water supply to admiral's, captain's, chief of staff's and sick-bay bath room is by-passed around tanks so that the fixtures in these rooms can be supplied direct from the fresh-water main.

A $1\frac{1}{2}$-inch connection, for supplying steam launches, is fitted in discharge pipe from forward electric pump.

All the necessary cut-out and check valves to prevent the distilled or salt water from mixing with the fresh water, and to prevent the equalizing or draining of the small tanks in spaces, are fitted. All fresh-water piping is of wrought iron, and galvanized after bends have been made and flanges fitted.

The valves controlling supply to the spaces, and branches for stateroom use, are fitted with faucets, and such other valves as may be required are fitted with an approved locking device. All pipe castings on fresh-water system are of cast iron, galvanized.

Fresh-Water Tanks.—Tanks for the distribution of fresh water on ships of the Navy are usually arranged as follows:

Ship's tanks of a capacity of about 16,000 gallons are located in the forehold. The distributing pipe from the distiller fresh-water pipe is connected to these tanks through a manifold in the vicinity of the tanks. There is a distributing pump near this manifold for supplying the fresh-water main; each tank is made independent for pumping from or filling through this manifold. These tanks can also be filled from a water boat, by hose connection of 2½-inch Navy standard hose, from the ship's side, through a pipe connecting also to this manifold. There are other fresh-water tanks of about 800 gallons total capacity located in the afterhold, which are sometimes used as ripening tanks, a discharge from the fresh-water distiller pump connecting directly to these tanks. These tanks can also be filled from the ship's tanks forward by the distributing pump through the fresh-water main. On some ships there is a pump, near these tanks, by which water can be pumped from them into the ship's tanks. To these tanks are also sometimes connected hand pumps, located in the admiral's, captain's and wardroom pantries.

Gravity Tanks.—Gravity tanks of about 2000 gallons total capacity, and usually located on the upper or bridge decks, are supplied from and distributed through a pipe from the fresh-water main, tapped into the bottom of these gravity tanks. The distributing pump forward is fitted with a relief valve, or other automatic device, which starts and stops the pump as the gravity tanks fill or become empty. These gravity tanks, being connected to the fresh-water main, of course maintain a con-

stant pressure on the main and its several branches into all parts of the ship. There is usually an auxiliary tank on the gun deck of a capacity of about 700 gallons, to which hand pumps in the galley, bakery, laundry, etc., are sometimes connected, although on many ships branches from the fresh-water main are carried into these places, where water may be drawn from the faucets. Smaller copper tanks for reserve purposes are often located in the officers' pantries, and bath rooms, and in the firemen's and machinists' wash rooms. All tanks are fitted with overflows larger than the filling pipes. Stop valves are fitted near the fresh-water main for cutting out all branches to the tanks. The small reserve tanks have a cut-off valve near them.

Reserve Feed Tanks.—Some of the double-bottom compartments under the fire rooms are used for reserve feed tanks, and are connected to the discharge of the distiller fresh-water pump for filling; these tanks also have a filling pipe from the ship's side for taking water from water boats.

Trimming Tanks.—The lower compartments in each extreme end of the ship are used as trimming tanks; on the older ships sea valves are fitted for filling, on the latest vessels no sea valves are provided, and these tanks are filled with fire hose through the manholes. Suction-pipe connection is made to the pumps for pumping out. These tanks are filled or emptied as required to increase or decrease the draft at either end. When trimming tanks are pumped out, they should be thoroughly cleaned, taking care that the strainer at the suction is clean and clear of waste or other matter that would hinder pumping.

SCUPPERS.

A sufficient number of scuppers are fitted to efficiently drain the decks and spaces. Scupper pipes, flanges and all castings are of brass, and the scupper retention pieces are of about 7½# plating, galvanized. The main pipes extend from the

weather deck down between the frames, passing through the stringer plates of the decks and coming out through the side of the ship just above the cofferdam, in the wake of same, and elsewhere just above the heavy armor. The joints of the scuppers between decks are either screwed or flanged, and are so arranged that in making repairs it will not be necessary to break the connections at decks. All joints of castings through the deck or between parts of the same casting should be set up with canvas coated with a mixture of white- and red-lead putty; the joints at the water-tight deck should be canvas coated with red-lead and white-lead putty, under flanges, and tarred hemp felt under stapling and liner. In order to secure a perfectly neat fit and water-tightness in scupper pipes, and to avoid breaking the brazing by undue strain on flange bolts, one of the joints between decks is made up with a lead washer of an approved thickness. Hammock berthing on weather deck, military tops, search-light platforms, top of chart house, bridges, signal tower, winch beds, boat cranes and windlass enclosure, are provided with 2-inch drains of brass pipes. These drains, where practicable, discharge into waterways or the mouths of the main scupper pipes.

THE PLUMBING SYSTEM PROPER.

The plumbing system proper on ships of the Navy consists of water closets, lavatories and bath rooms for officers and enlisted men, and the sink drainage from officers' pantries, the galley, bakery, laundry, sick-bay, etc.

The plumbing for the admiral, captain and chief of staff consists of a water closet, bath tub with shower, lavatory and water heater for each officer; these bath tubs and lavatories have hot and cold, fresh and salt water connections, with the necessary check valves to prevent mixing of hot and cold, and salt and fresh water. This plumbing is all open and of nickel-plated material, and much care should be exercised, in over hauling it, not to scar the fittings.

The water heater referred to here consists of a brass outer tube 2 inches in diameter and a copper straight inner tube $1\frac{1}{2}$ inches in diameter, both of which are secured to a composition head casting; the head casting has an extension at the top for steam connection and is tapped at the side for $\frac{3}{4}$-inch water-inlet connection. The outer tube is secured to a composition bottom casting; the bottom casting is arranged with a stuffing box, packing gland, and gland nut, and is tapped for $\frac{3}{4}$-inch water-outlet connection. The inner tube is not more than 4 feet long and extends through the bottom, being arranged at bottom with a drain casting for a $\frac{1}{2}$ inch drain.

All joints of the heater are made up with standard pipe threads. The heater is designed to stand a pressure of 100 pounds to the square inch, and is capable of raising the temperature of water from 45° F. to 105° F. at the rate of not less than 5 gallons per minute, with a steam pressure of not more than 25 pounds per square inch. The heater is supported by two clamp brackets with bulkhead flanges. All exposed portions of the heater are nickel-plated.

Heaters for individual lavatories are constructed on the same general plan as the above, the only practical difference being that these have an inner tube only about half as long.

The ward room, junior officers and warrant officers have W. C.'s and baths somewhat similar to those spoken of above. The W. C.'s for enlisted men, or otherwise known as "men's head," are located in the forward end of the ship and are usually made up of long troughs flushed at each end from the flushing main and discharging from the center. The men's urinals are constructed in the same manner, bolted to the bulkhead, with a perforated pipe running along the top for rim flush.

The use of other than regular tissue paper in closets should be discouraged, as newspapers or heavy paper will often clog the drains.

The drains from sinks in pantries, galleys, etc., often get stopped up with crumbs, meat scraps, etc. Clean-outs are usually fitted with T's at turns in convenient places, although sometimes these drains may be cleaned by using a force pump or long wire. Sink drains should be blown out with a steam hose occasionally, to clean out the grease; where a steam hose is not available, boiling-hot water with some lye dissolved in it will do.

Water Closets.—There are two types of water closets used on board ship, known as "below-water," which operate below the water-line, and deck closets, or "above-water," which operate above the water-line; the below-water closets are operated with a hand pump as part of the mechanism of the closet. These closets are also operated above the water-line, but should not be placed very high, as this would entail more work than was intended for the pumps.

The deck closet, or above water-line closet, is sometimes known as a single-flush closet and is always flushed from the flushing system, or by gravity tanks located overhead. Care should be taken with these closets to keep the bottom valve in the bowl in good condition, to always insure a small amount of water being left in the bowl after flushing. The operating mechanism should be kept properly adjusted, so that the valves will open and close as they are intended to, and never under any circumstances should the lift handle be propped up with a stick or wedge, allowing the closet to flush continuously, which would soon wear away the flushing valve, necessitating either a new valve or a complete overhauling.

All W. C.'s should have a vent on the discharge when it is possible to fit one. This vent should be at the highest point on the discharge pipe, terminating in the side of the ship, or some other convenient place above the water-line where offensive odors would not be troublesome, with a strainer fitted over the end. These vents on closets below water-line will prevent the

discharge pipe being air bound; and on closets above water-line, where considerable back pressure is often caused by the ship rolling heavily, this will be much relieved by these vents.

A sea valve, preferably a round-way cock, should be fitted on the discharge of all W. C.'s that discharge immediately at or below the water-line, this valve, of course, to be closed when it is necessary to make repairs to the closets which would require taking them down or disconnecting any of their pipes.

Discharge pipes from W. C.'s are made of brass.

Galvanic Action.—Galvanic action has been found in any case where brass or copper pipes have connections with iron piping in a system through which salt water flows. The effect of galvanic action is to eat away places in the brass or copper piping and make small pin holes in these pipes, and entirely to eat away iron nipples, where screwed directly into brass or copper piping; therefore, iron pipe or fittings should never under any circumstances be connected to brass or copper pipes, where the service is salt water. Galvanic action has also been noticeable in continuous lines of brass and copper pipe where no direct iron connections are made. This is due, no doubt, to the difficulty in obtaining perfect insulation between the brass or copper pipe and the surrounding structural work of the ship, which is iron or steel.

This deteriorating action on systems of piping may be hindered somewhat by placing boxes at the joints of the longer lengths of piping, in which are suspended zinc rings in such a way that the water must flow through them. These boxes have caps or bonnets on them, which may be removed for the purpose of renewing the zinc rings as they are consumed by the effect of this action. This has been found to greatly protect the pipes against deterioration. It is not, however, a positive preventative. To insulate brass and copper pipe from the iron hangers, and from beams overhead which the pipe would be likely to touch, is also a good precaution to take, and is thought

by some to greatly prevent galvanic action. All brass and copper pipe should be well tinned inside when used for salt water service. Recent experiments, which are proving very successful, have been made with lead-lined pipe, the use of which has been adopted for the larger sizes of pipe 1½ inches and over, in all systems of salt water service on ships of the Navy.

Repairs to Flushing Pipes or Fire Main when Holes Come from Galvanic Action or Other Deterioration.—Temporary repairs may be made without shutting off the water, by putting a small white-pine plug in the hole, if it is round; or if a long crack is the cause of the leak, it may be stopped by binding the pipe with a piece of canvas painted with red lead on both sides, and wound tightly with marlin or small tarred rope. A more permanent job may be done if the pipe is drained, by soldering up the hole or crack, or sweating on a patch with soft solder. A still more substantial way is to braze a patch over the hole; to do this, however, it is generally necessary to take down the section of pipe and take it to the forge.

Instructions for Lining Pipe with Lead.—Thickness of lead lining to be practically ⅛-inch lead for all diameters. Limit the length of piping in hot spaces to 6 feet.

NOTE.—It is desired that seven to eight feet be not exceeded elsewhere.

Endeavor to reduce the amount of bent piping, especially in hot spaces, using castings for serious changes in direction. Make the radius of curvature as long as possible and not less than six diameters of the pipe.

Perforate the steel tubing. Pending further experience the following practice has been adopted: ¼-inch holes will be used for all diameters.

Spacing of holes: End holes close to back of flange; intermediate holes spaced about 12 inches. For piping of 5 inches and larger, four rows of holes will be provided, spaced 90°

apart, viz., top, bottom and two sides. For piping below 5 inches, two rows of holes will be provided, viz., top and bottom.

Fit an ample number of pipe hangers. Fit flanges with hollow heel and fit lead hollow in wake of hollow heel. Flange the lead to the outer edge of the steel flange as above described.

Continue the use of $\frac{1}{16}$-inch rubber gaskets, and cut hole in gasket to same diameter as hollow heel of flange.

In hot spaces, the pipe and flanges to be lagged; lagging on flanges to be portable.

Provide suitable expansion means for piping where rigidly locked between bulkheads, etc. This can be accomplished by the use of flexible flanges on closing sections.

Grommets and washers for flange bolts are not necessary or desirable with the above arrangements and will not be fitted.

The steel pipe will be galvanized inside and outside. In general pipes will be perforated before galvanizing.

The lead lining will be flanged by the use of flanging plug wherever possible.

Method of inserting lead pipe into steel pipe:

Straight pipe is merely inserted and requires no explanation.

Bent pipe is reduced in diameter in the part which enters first and which has to be drawn around the bend. Double (*i. e.*, reverse) bends must be avoided in practically all cases.

In relining piping having a double (*i. e.*, reverse) bend, the pipe should be cut and a pair of flanges introduced. For difficult bends that cannot be avoided it may be necessary to fill the lead pipe with sand to avoid buckling.

The operation of reducing the diameter of the lead pipe is to be done by beating, using the electrically operated beater when practicable.

Drawing the lead pipe down by pulling it through a die is prohibited as it will result in reducing thickness. It is also prohibited to collapse the pipe as chafe in the pipe may produce lines of weakness.

In hauling the bent pipe into the bent steel tube, care must be taken not to exert too much pull and thus stretch the pipe. The lead must be coaxed with great care. It is desired that a method be developed which will push and pull simultaneously. The following will be tried out: Use a continuous wire rope, one end attached to the rear end of the pipe by cross bar or disc; pass rope through the lead pipe then over the sheave of a block and back to the leading end of the lead pipe where attachment will be made by closing in lead pipe or by clamping discs as heretofore, except that passage, or hole, has to be provided for the part of the rope going to the rear of pipe. The hauling-in line from the purchase or winch will be attached to the hook of the block. This scheme will give a simultaneous push and pull of equal amount.

Lubricant may be used to reduce friction around the bend.

Expanding the Lead Pipe into the Steel Tube.—The apparatus for this may be summarized as follows:

(a) A series of polished balls of varying diameter to suit the different size pipes.

(b) A series of polished cast-iron projectiles of varying diameter to suit different size pipes. These projectiles are backed with a cup leather check so that they hold water, and permit their being forced through the lead pipe by water pressure back of them. It may be stated here that any considerable expansion of lead by air or water pressure is not permissible, as this produces weak spots, since the lead pipe will inevitably expand along its weak lines. Hence mechanical expansion for the most part is necessary.

(c) A series of cup leather plugs, with water connection, for inserting into the ends of the lead pipe abreast the steel flanges to seal the pipe when water is introduced to force the projectile through the pipe. These are held by cross bar and bolts through the steel flanges. These plugs are made of various diameters to suit the different diameters of pipe. They

consist merely of a steel disc fitted with cup leather check. The water pipe is tapped into the steel disc and forms support for the cross bar.

(d) Lead-working hand tools, for working out the lead at the end to receive the projectile and the cup leather plug, and to work over the lead on the flange, when flanging cannot be used.

(e) Pressure pump for forcing the projectile through the pipe and for applying the test pressure.

Operations Connected with Expansion of Lead Pipe Inside of Steel Pipe.—The lead pipe having been introduced as indicated above, the lead pipe is cut off at each end leaving sufficient projection for flanging over and allowance for contraction in length which occurs during expansion of the lead pipe into the steel pipe. Expand the lead to the steel tube by hand tools for a sufficient distance in to receive the projectile and plug. The projectile having been inserted, water pressure is applied between the projectile and plug.

The projectile and plug: For bent piping where the lead pipe was reduced considerably in diameter and where tendency to buckle shows, the projectile is preceded by balls of increasing diameter so as to expand the lead gradually and uniformly.

It is the aim that the water pressure necessary to drive the projectile shall be greater than the pressure the lead pipe is able to stand, so that as the projectile advances, the projectile will force uniform mechanical expansion of the lead until it nearly touches the steel, and the water will force out the lead into intimate contact.

To arrive at the above condition careful selection of projectile is necessary. A cross bar supported by the flanges is fitted across the pipe at the far end so as to stop the projectile when its cup leather check reaches a point abreast the flange. A pressure of 300 pounds is then applied for all piping of 5

inches and larger to finally set the lead out against the steel; 500 pounds for all piping below 5 inches.

This test with unflanged lead, is very apt to show any defect or fractures in the lead by leakage.

Projectile and plugs are then removed and the lead worked over on the two flanges by flanging plugs or hand tools. This completes the process of lining and the pipe is ready for the ship.

Instructions for Repair Work.—Where repair work can be classed as new work, follow the instructions as given above. In general, the aim is to follow the latest practice; however, in repair work, existing conditions have to be met, and at minimum or reasonable cost.

The standard problem that presents itself is that of renewing a defective lead lining following latest practice without touching neighboring sections which are still in good condition.

All the requirements of practice can be met fairly well when the necessity of the case justifies the expense, except those calling for hollow-heel flange with lead flanged to outer edge of flange, because a hollow-heel flange cannot be jointed with the former counterbored flange. As hollow-heel flanges and perforated steel pipe is the two most vital points in overcoming lead lining failures, both must be complied with on repair work.

Perforating presents no difficulty, even without removing lead, and will not be referred to further.

The ordinary case of relining is where no work is required on the pipe except new lead lining. It will be noted that this pipe is of given length and shape. To adopt hollow heel requires flanging lead to edge of flange and hence reducing the length of the steel pipe by the thickness of lead on each flange.

Generally the flanges are heavy enough to permit machining off sufficiently for this, and for the hollow heel. If this cannot be done one flange can be set back a little and re-expanded,

using the counterbore when of suitable diameter as a hollow heel, or new flanges fitted, if required. Or, one flange can be set back and re-expanded, old counterbores filled with solder and hollow heel provided.

The greatest trouble, however, comes with jointing the neighboring sections which may have one of three types of flanges as follows:

(1) Solid casting flange such as valve *L* or *T*.

(2) Counterbored lead-lined flange.

(3) Screwed flange as for bulkhead or deck casting.

Type (1) presents no difficulty as it is suitable for joining with the heel.

Type (2) presents trouble and requires a remedy. This remedy can be met by removing the neighboring section from the ship and fitting one flange with hollow heel and new lead flange, but this is expensive and requires more time.

Another remedy is to shorten the defective section to permit the installation of a composition "G" ring of about $\frac{3}{4}$-inch thickness. This permits the old counterbore of the neighboring section to joint on one side and the new hollow heel of the relined section on the other side. One or two such rings will be required according to whether a counterbored flange has to be met on one or both ends of the defective section.

It is not practicable to give instructions to cover all cases. In general, it is intended to follow the cheaper and more expeditious method which produces the result desired.

Type (3) presents an annoying case because many of the screw flanges leak if water can reach the threads. This type of flange is found principally on bulkhead and deck castings.

Where the screw flange is heavy and stiff, treat the case the same as first type, *i. e.*, use it for joining hollow heel, but make sure the flange is on tight.

Where the screw flange seems too thin, resort to the $\frac{3}{4}$-inch composition "G" ring as for type (2).

When occasion demands on repair work it will be satisfactory to retain counterbored lead against screwed flanges.

Where flange fracture exists in the defective lining, it is considered that the lining can frequently be saved by cutting off the old lead flanges, machining for hollow heel and burning on new lead flanges. Occasionally, body fracture can also be repaired by burning.

New Flanges.—Generally speaking, when new flanges are required these will be made of same diameter and bolting as old flanges.

Flexible Flanges.—The use of flexible flanges on repair work for closing sections and for repair work is to be considered as limited in accordance with Bureau of Construction and Repair instructions pending further experience in service.

Many sections of defective steel pipe can be saved. Corroded holes in body of pipes, unless very serious, can generally be patched with solder sufficiently to support the lead lining.

Corrosion at heel of flanges can frequently be overcome by welding on the flange and filling corroded part with solder or by burning.

Instructions on the varied subjects of repair work cannot be made complete and judgment must always be used in order that the desired result may be accomplished at a minimum of cost and in the minimum of time.

The Following Warnings Seem Appropriate.—Best quality lead must be used and this must be of uniform thickness within reasonable limits. Best workmanship is essential also proper apparatus to preserve uniform thickness of lead. Flanging by power, using flanging plugs, is recommended as it insures better and more uniform work.

Lines of weakness in all directions must be avoided.

In connection with the perforation of the steel tube for lead-lined pipe, as mentioned the following explanation and caution are deemed pertinent: The outer steel tube is perforated

to avoid collapse of the lead by the presence of pressure of air, water, etc., between the tube and lining. These holes are generally covered by the lagging and are not in sight.

These holes should not be closed by putty, or other means nor must anything be driven into them, as perforation of the lead will result.

If, on vessels in service, water is seen dripping from one or more of the perforations, attention should first be directed to flange joints as the leak may be around the flange of the lead lining. The flange bolts should first be tightened and if that does not stop the leak the pipe should be taken down and examined to see if a fracture or hole really exists and such action taken as the conditions warrant. If the lead is fractured effort may be made to repair same by burning or wiping with solder.

Mechanical expansion of the lead projectiles or balls driven by hydraulic pressure is essential to expand the lead as the projectile advances and thus avoid the formation of lines of weakness such as would be produced by hydraulic pressure applied to the entire pipe, as in this case the lead stretches along its weakest line and rapidly reduces its thickness along the weak line. Care must be exercised in the selection of projectiles so that too great a pressure is not required to force it through, as longitudinal stretch of the lead pipe may result. The pressure should be just above that at which that size and thickness of lead pipe begins to expand. The steel pipe must be smooth on the inside to avoid chafe of the lead lining.

LEAD PIPE FOR LINING STEEL TUBING.

(Navy Department Specifications 44P3a—November 2, 1914.)

General.—To be made of best commercial quality of pure soft lead containing at least 99.5 per cent pure lead. To be free from injurious dents, kinks, holes or scratches. The condition of the pipe to be equal to that of a pipe packed in straw or saw-

dust and provided with a mandrel or filled with sawdust to prevent collapsing.

Purpose.—For lining steel pipe used for fire mains, flooding and flushing lines and deck or floor drains.

Sizes and Dimensions.—To be delivered in 11½-foot lengths unless otherwise specified. The walls to be of even thickness throughout. The diameter, thickness and weight shall be in accordance with the dimensions given below under the heading "Lead Pipe for Lining." All pipe will be ordered by the inside diameter. A tolerance of 5 per cent above and below the tabulated weights and wall will be allowed.

Table 91.—Standard Wrought-Iron Pipe.

Lead pipe for lining.				Pipe to be lined.			
Inside diameter.	Outside diameter.	Thickness of wall.	Weight per foot.	Nominal inside diameter.	Inside diameter.	Outside diameter.	Weight per foot.
In.	*In.*	*In.*	*Lbs.*	*In.*	*In.*	*In.*	*Lbs.*
0.375	0.62	0.122	0.94	¼	0.622	0.840	0.850
.500	.72	.110	1.00	⅜	.824	1.050	1.130
.750	1.01	.130	1.75	1	1.049	1.315	1.678
1.000	1.28	.140	2.50	1¼	1.380	1.660	2.272
1.250	1.49	.120	2.50	1½	1.610	1.900	2.717

Table 92.—Steel Tubing.

1.500	1.74	0.120	3.00	....	1.810	2.000	1.932
1.875	2.125	.125	3.866	....	2.282	2.500	2.783
2.375	2.625	.125	4.833	....	2.782	3.000	3.365
2.875	3.125	.125	5.812	....	3.260	3.500	4.331
3.375	3.625	.125	6.750	....	3.732	4.000	5.532
3.920	4.125	.102	6.375	....	4.216	4.500	6.609
4.250	4.500	.125	8.500	....	4.696	5.000	7.870
5.000	5.200	.100	7.875	....	5.192	5.500	8.792
5.250	5.500	.125	10.312	....	5.672	6.000	10.222
5.875	6.125	.125	11.600	....	6.287	6.625	11.652
6.250	6.500	.125	12.312	....	6.652	7.000	12.685
6.875	7.125	.125	13.534	....	7.263	7.625	14.390
7.875	8.125	.125	15.437	....	8.249	8.625	16.940
8.000	8.375	.187	23.750	....	8.608	9.000	18.429
9.000	9.375	.187	26.625	....	9.582	10.000	21.855

Expansion Tests.—The lead pipe of an inside diameter of less than 4 inches shall be capable of being expanded by hydraulic pressure into steel tubing having an inside diameter $\frac{3}{16}$ inch larger than the outside diameter of the lead pipe. Lead pipe of an inside diameter of 4 inches and above shall be capable of a similar expansion of $\frac{1}{2}$ inch. The expense involved in conducting the above tests and inspection for surface defects on material delivered at navy yards or naval stations will be borne by the government. In the event of unsatisfactory tests, and the rejection of the delivery, the test specimens shall remain the property of the manufacturer.

UNIONS FOR LEAD-LINED PIPE.

(Navy Department Specifications 45U4a—September 1, 1917.)

General Specifications.—General specifications for inspection of material, issued by the Navy Department, in effect at date of opening of bids, shall form part of these specifications.

Purpose.—These unions are intended for use with $\frac{1}{2}$-inch, $\frac{3}{4}$-inch, 1-inch and $1\frac{1}{4}$-inch lead-lined pipe, used for salt-water systems on ships.

Quality.—Union shall be of good workmanship, and free from all defects which may affect their serviceability or appearance.

Material.—All parts of the unions shall be of material conforming in composition to that given in the latest issue of Navy Department specifications for castings, bronze (valve), composition M.

Workmanship and Finish.—All castings shall be sound and free from cold shuts or injurious blow holes. The unions shall be smooth and true to form, in accordance with dimensions as given in Table 93. The unions shall be thoroughly cleaned of sand and scale by the acid-bath process or an equal process, and shall have all fins or roughness removed. The parts shall have a machined finish where designated.

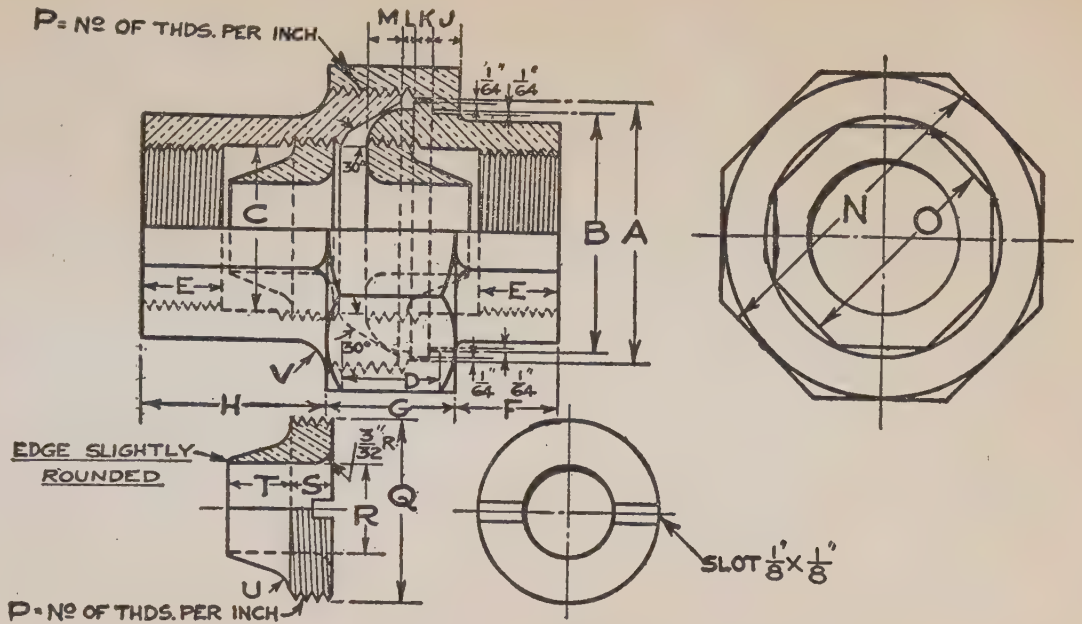

FIG. 108.—Unions for Lead-Lined Pipe.

Sizes.—Unions shall be delivered in the following sizes, as specified, with the dimensions as given in inches in Table 93:

Table 93.—Dimensions.

Size.	A	B	C	D	E	F	G	H	J	K	L
½ inch	1.31	1.19	.84	0.58	.44	.62	.75	1.09	.12	.12	.06
¾ inch	1.97	1.78	1.315	.65	.57	.84	.91	1.38	.16	.16	.06
1 inch	1.28	2.16	1.66	.76	.63	.875	1.00	1.62	.19	.16	.09
1¼ inch	1.59	2.47	1.90	.80	.75	.99	1.06	1.75	.22	.19	.09

Size.	M	N	O	P	Q	R	S	T	U	V
½ inch	.22	1.66	1.06	14	.93	.46	.25	.375	.06	1.25
¾ inch	.22	2.37	1.62	11½	1.43	.812	.375	.437	.093	2.50
1 inch	.3	2.72	1.97	11½	1.77	1.16	.375	.56	.125	2.50
1¼ inch	.34	3.06	2.25	11½	2.01	1.37	.375	.56	.125	2.50

NOTE.—The sizes listed above are for use on the next larger size pipe; thus the union listed under size ½-inch is used on ¾-inch pipe, which when lined with lead has an inside diameter of ½-inch.

Plan.—Unions shall be in accordance with plan incorporated in and forming a part of these specifications, dimensions of which are contained in Table 93, thus conforming to the figure for each size as given in the table of dimensions. All sides of the octagon shall be equal, so that the same opening of the wrench will fit all sides. The thread for the pipe shall be made in accordance with the latest issue of Navy Department specifications for standard pipe threads for pipe and pipe fittings. The ground-joint surface of the two parts which form the joint between the two sections of pipe shall show perfect contact. The ferrule shall be fitted so that there is no perceptible looseness in the fit. The unions shall be tapped to receive the threaded ends of the standard weight pipe they are to fit.

Tolerance in Dimensions.—A variation of 5 per cent plus or minus will be allowed from the dimensions of unions given in Table 93.

Tests.—One union shall be selected from every two dozen, or from each lot when a less amount is ordered of the same kind and size, and shall stand, without any show of moisture on the outside, a hydraulic pressure test of 225 pounds per square inch.

PNEUMATIC SYSTEM.

A compressed air system is installed for ejecting gas for all guns of 5-inch and larger caliber.

The mains, which are of 2-inch brass pipe, are below the lowest complete water-tight deck, and are run on both sides of the ship as far as required, with cross-connection at each end and at each turret or group of turrets.

Air is supplied by connections on both sides of the ship from all air compressors, except high-pressure torpedo air compressors, and also by connection from the torpedo accumulators.

Branches for supply to the broadside guns are taken from the main, and branches for the turret guns from cross-connections. On the latest battleships independent air lines are led direct from compressors to relay tanks in big gun turrets, for use in case of the gas-ejector air main being put out of action.

There is a cylindrical relay tank fitted in the vicinity of each gun.

The supply to relay tanks in the turrets is led through the base casting of the ammunition hoist by means of a swivel joint.

Stop valves are fitted in the supply from compressors, at each relay tank, in all branches from the main, and in the cross-connections on each side of the supply to turrets. Check valves are fitted in the supply to each relay tank before the connection to the gun is taken off.

Connections from torpedo accumulators are fitted with reducing valves, set at the line pressure, and safety valves set at 25 pounds above the line pressure.

Branches are led from the mains to the dynamo rooms, for cleaning generators, etc.; connections are also made for pneumatic torpedo hoists, pneumatic turret hoists, chain compressor cylinders, water-ejecting systems when any of these are fitted, and in convenient places for the operation of pneumatic tools, etc.

QUESTIONS FOR PLUMBER AND FITTERS.

Q. Name the tools required by plumber and fitters on vessels of the Navy.

A. Plumber's gasoline furnace; pipe-bending outfit, capacity 2-inch; breast drill with set of small drills; electric soldering iron; set of taps and dies for pipe up to 3 inches; pipe vise; bench vise; hand vise, tap borer; calipers, inside and outside; file brush; set of hand cold chisels; center punch; set of pipe cutters up to 3 inches; washer cutter; dividers; plumber's dresser; tinner's fire pot; hack saw; coppering hammer; chipping hammer; machinist's ball peen hammer; plumber's shave hook; set of soldering irons, 3 and 5 pounds; plumber's chipping knife; plumber's ladle; tinner's mallets; gas pliers; flat-nose pliers; round-nose pliers; side-cutting pliers; plumber's force pump; solder pot; rivet set; screw drivers; tinner's shears; bench shears; tinner's stake; beak horn; plumber's turn pins; bending iron; 2-foot rule. The following wrenches: Monkey, Stillson and tap wrenches; chain pipe tongs.

Q. Describe a turn pin and its use.

A. A piece of wood shaped like a top, used to shape the ends of lead pipe when spreading it.

Q. Describe a tap borer and its use.

A. A triangular scoop-shaped steel tool, used to ream out and enlarge holes in lead pipe.

Q. Describe a bending iron and its use.

A. A S-shaped piece of round steel, used to spread and lift the edges of a hole in lead pipe when preparing a branch joint.

Q. What kind of pipe is used on ships for fire main, flushing system, and other salt-water service?

A. Steel tubing galvanized and lead lined, for sizes above $1\frac{1}{2}$ inches; and for sizes below this, galvanized iron lead-lined pipe, brass, or copper pipe tinned inside, with screwed fittings.

Q. Why is lead-lined pipe used?

A. Because lead is affected less by deterioration from galvanic action than other metals. (See page 566 on galvanic action.)

Q. What kind of pipe is used for fresh-water systems?

A. Galvanized iron.

Q. What is the outside diameter of 1-inch pipe?

A. About $1\frac{1}{4}$ inches.

Q. What is the inside diameter of 1-inch pipe?

A. About 1 inch.

Q. What is a trap?

A. A bend or lowered section in a pipe, which retains a sufficient quantity of water to prevent the passage of gases or odors from the sewer.

Q. Where are traps vented?

A. From the crown or sewer end of the trap.

Q. How should connections be made between lead and wrought-iron pipe?

A. By a brass nipple screwed into the end of the iron pipe and wiped on to the lead pipe.

Q. Where should cleanouts be placed?

A. At right angle turns, at the ends of horizontal lines, and at the bottom of traps.

Q. Describe the method of taking measurements for cutting and fitting pipe.

A. See page 469.

Q. Describe method of bending iron pipe, and advantages of bends over fittings.

A. See page 470.

Q. Describe method of bending brass pipe.

A. See page 471.

Q. How is brass or copper pipe annealed?

A. By heating and dipping suddenly in water while hot, until entirely cooled off.

Q. Describe the following fittings briefly: Elbow, reducing elbow, tee, union coupling, cap, plug.

A. Elbow, a fitting for making 90° angles in a line of pipe. Reducing elbow, a fitting for making 90° angles and reducing the size of the pipe. Tee, a fitting for making a right angle branch from the line. Union coupling, a fitting for making a connection with a loose nut, by which neither piece of pipe has to be turned. Cap, a cup-like fitting which screws on to the end of a piece of pipe to blank it off. Plug, a solid piece of threaded metal to blank off holes in fittings.

Q. Describe a check valve, its use, and how it is placed in a line of pipe with regard to the pressure.

A. A check valve has a loose disk, and opens by pressure from one side, but closes by pressure from the other. It is placed in a line of pipe to prevent water from flowing back. The valve is placed with the top side of the disc next to the constant pressure or body of fluid which it is desired to prevent from flowing back.

Q. Describe a globe valve, its use, and how it is placed in a line of pipe with regard to pressure.

A. A globe valve has a disc fixed on a threaded stem or rod, on which there is a hand wheel for opening and closing the valve. It is used for cutting off pressure in the line. This valve is placed with the bottom of the disc next to the constant pressure.

Q. What size hole would you drill for a 1-inch pipe tap?

A. $1\frac{3}{10}$ inches.

Q. What should be put on the threads of pipe when making up a joint.

A. White or red lead, plumbago and tallow or a pipe joint compound.

Q. Describe the process of tinning a soldering iron.

A. Heat the iron to a dark cherry, file the point clean and bright; sprinkle pulverized rosin and a few drops of solder on a brick, and rub all sides of the iron into this mixture well while heated as above directed until the point of the iron is tinned bright. A solution of salimoniac may also be used.

dipping the iron in the solution while hot and rubbing on a piece of tin with rosin and solder.

Q. Describe the process of soldering.

A. See page 525.

Q. What metals can be soldered without tinning?

A. Lead and tin.

Q. Describe the process of wiping a joint.

A. See page 526.

Q. Of what is wiping solder composed?

A. Lead and tin, usually about two parts of the former and one of the latter.

Q. When solder sticks to the wiping cloth what does this indicate?

A. That there is too much tin in the solder.

Q. What is the result if the solder has too much lead?

A. It will be coarse, and the joints made of it are liable to be porous.

Q. What is the result if the solder has to much tin?

A. It will stick to the cloth, and run off on the under side of the joint.

Q. When the wiping cloth scratches in wiping, what should be done?

A. Rub the cloth with a little powdered chalk or brick dust.

Q. What substances if put in wiping solder renders it use less?

A. Brass, zinc and antimony.

Q. What method is used for purifying solder when it contains any of the above substances?

A. Heat the solder to a dark cherry red, add a tablespoonful of sulphur, and stir briskly; this will cause the impurities to rise to the surface, when they may be skimmed off, after which add a little rosin to assimilate the lead and tin again.

Q. Name the different systems of piping on a battleship.

A. Drainage; sounding tubes; air escapes; flooding arrangements; fire systems; sanitary or flushing system; fresh-water

system; pneumatic system; ventilation system and voice tubing.

Q. Name the subdivisions of the drainage system, giving the functions of each.

A. Main drainage has large suctions for removing large quantities of water from the engine and fire rooms. Secondary drainage, for draining bilge wells, inner bottoms, trimming tanks, etc. Deck drainage, for compartments below the protective deck, the above compartments having pump suctions, into which they drain by gravity through floor drains, such as upper dynamo rooms, steering engine and tiller flat, evaporator rooms, etc. Scupper or surface drainage, for draining, by gravity, all compartments above the water-line, such as hammock berthing on weather decks, winch beds, military tops, tops of chart houses, bridges, decks, etc. (See text, Chapter 5, for full descriptions of drainage.)

Q. To what compartments are sounding tubes and air escapes fitted, and what are their uses?

A. Sounding tubes are fitted to all inner bottoms, trimming tanks, etc., having drainage connections, and in general to all principal compartments, whose outer sides are formed by the outside plating. They are used for sounding to determine the presence of water. Air escapes are fitted to all compartments having flooding arrangements, and as the name applies, are pipes which permit the air to escape when compartments are being flooded.

Q. What compartments on ships are usually fitted for flooding and why?

A. Inner-bottom compartments under the machinery space and fire rooms, these are sometimes used as reserve feed water tanks, if a ship should be in fresh water, feed water could be taken into these compartments through the flooding arrangement. Magazines are fitted with flooding arrangements to extinguish or prevent fire. Trimming tanks are flooded to change the draft of the ship.

Q. Describe the fire system on a battleship.

A. See page 554.

Q. Why does the fire main have a cross-connection to the flushing main?

A. To supply the flushing system through the fire main, in case flushing pumps are out of order.

Q. Describe the flushing system.

A. See page 557.

Q. What kind of pipe is used in flushing systems?

A. See page 558.

Q. What types of water closets are used aboard ship?

A. There are two types, one which is designed with a pump attachment, to operate below the water-line; and one which operates above the water-line, and is flushed from the flushing system or a tank overhead.

Q. What causes galvanic action, and what means are employed to resist it?

A. See page 566.

Q. What would be the result if iron pipe, not lead-lined, be connected with brass fittings for salt-water service?

A. Galvanic action would soon deteriorate the pipe or fittings, causing leaks.

Q. Describe the method of grinding and reseating globe valves.

A. See page 523.

Q. Describe the method of reseating gate valves.

A. See page 524.

Q. Describe the method of grinding plug cocks.

A. See page 525.

Q. What is the standard taper of the threaded portion of pipe?

A. $\frac{1}{16}$ inch to 1 inch or $\frac{3}{4}$ inch to the foot.

Q. Describe the process of brazing.

A. See page 530.

Q. How does hammering affect copper or brass?

A. Hardens it.

Q. How can these metals be made soft again for working?

A. By annealing, which is done by heating and plunging in cold water till cool.

Q. What material should be used for making up flange to flange joints when the flanges are faced?

A. $\frac{1}{16}$-inch gum with one insertion of cloth.

Q. What material is used for making flange joints of the ventilation system, when not faced or not stamped true?

A. $\frac{1}{8}$-inch gum with two insertions of cloth.

Q. What material is used for making joints to water-tight bulkheads, decks, connections to outside platings, inner bottom plating, etc., where liable to come in contact with bilge water?

A. Two layers of No. 10 canvas soaked in raw linseed oil and painted with thick red lead.

Q. What material is used for making up flange joints to wood decks?

A. Two layers of No. 10 canvas soaked in raw linseed oil and painted with thick white lead.

Q. What material is used for making flange joints for oil-tight work?

A. Pasteboard saturated with a mixture of 20 parts wax and 10 parts varnish.

Q. How are the flange bolts made up on water- and oil-tight work?

A. Through bolts are packed under the head and nut with grommets of lampwick or hemp, thoroughly soaked in red lead for water-tight work; and lampwick soaked in shellac and red lead or untarred hemp soaked in boiled linseed oil for oil-tight work. Washers should always be put under the nuts, and in special cases, under the heads also. Through bolts for connection to inner-bottom plating and oil tanks are tapped

through, and head, nut and washer where fitted, are packed as above.

Q. How is water-tightness obtained at decks and bulkheads where screwed pipes for water, steam, conduit, air and voice tubes pass through?

A. By means of stuffing tubes and lock nuts and washers. Voice tubes are to be insulated at hangers and where passing through holes to avoid metal-to-metal contact.

Q. How are flange connections made up when used similar to deck plate casting?

A. With red-lead putty under upper flange and leather under lock nut.

GLOSSARY OF TERMS USED IN PIPE-FITTING WITH DEFINITIONS GIVEN.

(From Hand-Book of National Tube Company, 1913.)

A.

Ammonia Cock Thread.—Ammonia cock thread is usually larger and has more taper than Briggs' standard thread. It lacks uniformity and is made to suit customers' requirements.

Ammonia Fitting.—A fitting whose material is especially homogeneous, which usually has its mouth countersunk and both the mouth and thread tinned.

Ammonia Joint.—All joints should be made of wrought iron or steel, as ammonia attacks and eats away copper and its alloys, brass and gun metal. In consequence of penetrating nature of ammonia, all flanges should be screwed and then soldered on the pipes. Lead washers should be used for gaskets on all flange joints. Lead or white metal packing must also be used for all valves.

Angle Gate Valve.—A gate valve with an elbow cast on one end integral with body.

Angle Valve.—A stop valve whose outlet is at right angles to its inlet branch, thus combining in itself a valve and an elbow. It must not be confused with angle gate valve.

Angus Smith Composition.—A protective coating for valves, fittings and pipe used for underground work. It is composed of coal tar, tallow, rosin and quicklime and must be applied hot.

Annealed End Tube.—A tube whose ends have been annealed. For annealing to be effective, it is necessary to heat above the critical temperature, and this is higher as the carbon contents are less, so that with the soft steel of which pipe and tubes are made, annealing must be done at a high heat, 1750° to 1800° Fahrenheit, which is a bright orange in shop daylight. The piece may be allowed to cool in the air after being thoroughly heated to the temperature.

Armstrong Joint.—Designed by Sir W. Armstrong. It is a two-bolt, flanged or lugged connection for high pressures. The ends of the pipes are peculiarly formed to properly hold a gutta-percha ring. It was originally made in cast-iron pipe. The two-bolt feature has much to commend it. There are various substitutes for this old, high-class joint; the commonest employ more bolts in the endeavor to cheapen.

Artesian Joint.—See Cressed Artesian Joint.

Asphalted.—Coated with asphalt literally, but usually some of the special compositions such as California oil (which has an asphaltic base), coal tar, mineral wax or Gilsonite or Elaterite are added to give the right consistency to suit the average temperature which prevails when the coating is used.

Attemperator.—A coil of pipe, sometimes working on a swivel or hinge, through which refrigerated brine, or other liquid, is passed. Used to cool vessels containing warm liquids such as fermenting vats.

B.

Back Outlet Central.—Meaning that such outlet is placed centrally or at mid length. (Use limited to fittings.)

Back Outlet Eccentric.—Meaning that back outlet of tee elbow, etc., is not placed at center. (Use limited to fittings.)

Back Outlet Ell.—An ell with an outlet in the same plane as the run and on the outside of the curve.

Back Pressure Valve.—A valve that usually is made like a low-pressure safety valve, but capable of being opened independently of the pressure, thereby giving free exhaust. They are usually employed on non-condensing engines when it is desired to use all or part of the exhaust steam for heating, etc. The back pressure maintained by them is usually between one and ten pounds.

Balling.—Nearly the same as peening.

Ball Joint.—A flexible joint made in the shape of a ball or sphere. Many forms of joint employ such spherical surfaces.

Bar.—See Sinker and Water Bar.

Barrel.—See Working Barrel.

Bead.—When applied to fittings means the slight reinforcing ring on the end. A circular molding.

Beaded Tube.—The ends of boiler tubes, after being expanded, are beaded or rounded with a beading tool, just as rivet heads are finished with a die or snap. The process is termed beading.

Beading.—The name given to the slight flanging of the end of a boiler tube over a tube sheet, or of the pipe, over a peened flange.

Bell.—In pipe fitting, the recessed or enlarged female end of a pipe into which the male end of the next pipe fits; also called hub. In plumbing, the expanded female portion of a wiped joint.

Bell and Spigot Joint.—The usual term for the joint in cast-iron pipe. Each piece is made with an enlarged diameter or bell at one end into which the plain or spigot end of another piece is inserted when laying. The joint is then made tight by cement, oakum, lead, rubber or other suitable substance which is driven in or calked into the bell and around the spigot. When a similar joint is made in wrought pipe by means

of a cast bell (or hub) it is at times called hub and spigot joint (poor usage). Matheson joint is the name applied to a similar joint in wrought pipe which has the bell formed of the pipe. Applied to fittings or valves, means that one end of the run is a "bell," and the other end is a "spigot" similar to those used on regular cast-iron pipe.

Bell Mouthed.—A term used to signify the open end of a vessel or pipe when it expands or spreads out with an increasing diameter, thus resembling a bell. Also called trumpet mouthed.

Bend.—A curved length of pipe struck to a larger radius than the elbow. Pipe bent to 45°, 90° or 180° is often specified as $\frac{1}{8}$, $\frac{1}{4}$ or $\frac{1}{2}$ bends. A slight bend is often called a spring (poor usage). See close return, cross over, double, eighth, goose neck, open return, pipe, return, and Y bend.

Bibb.—A cock or valve with bent outlet; strictly the bent outlet.

Blank Flange.—A flange that is not drilled but which is otherwise complete. At times used to signify a blind flange (this is poor usage). Compare blind flange. At times used to signify a pipe flange that is not threaded, but which is otherwise complete (this is bad usage).

Blanking Flange.—A blind flange, which see (poor usage).

Bleeder.—A small cock or valve to draw off water of condensation from a range of piping.

Blind Flange.—A flange used to close the end of pipe. It produces a blind end which is also called a dead end. It is at times used erroneously to designate a blank flange. Compare blanking flange.

Block Joint.—A joint used by plumbers in which an inserted joint is combined with a wide flange; used for wiped joints on heavy vertical pipes.

Boiler Flange.—See Saddle Flange.

Boiler Thimble.—A ring placed between boiler tube and the tube sheet or header. The term is more often used in con-

nection with locomotive and marine than stationary boilers (poor usage).

Boiler Tube.—One of the tubes by which heat from the furnace is diffused through the water in a steam boiler. The tubes may contain water and be surrounded by the furnace gases as in a water tube boiler or they may act as flues and be surrounded by water as in a tubular boiler. The usual sizes of boiler tubes are 2 to 4 inches.

Bonnet.—A cover used to guide and enclose the tail end of a valve spindle. A cap over the end of a pipe (poor usage).

Bowl.—See Bell.

Box.—See Service and Valve Box.

Box Coil.—An arrangement of heating pipes made up in the form of a rectangular box.

Boyle Union.—Essentially a tongue and groove flange connection in which the tongue is a separate piece placed between two grooved flanges. Usually the groove extends to the threads so that the gasket material seals that point and permits use of flanges that are not screwed very tight.

Bracket Coil.—A heating pipe usually one or two pipes wide, supported by hooks or expansion plates.

Bracket Valve.—A stop valve with a bracket cast upon its body, so that it may serve as an anchorage or support for the piping which it controls.

Branch.—The outlet or inlet of fitting not in line with the run, but which may make any angle. See H and Y Branch.

Branch Ell.—Used to designate an elbow having a back outlet in line with one of the outlets of the run. It is also at times called a heel outlet elbow. Incorrectly used to designate side outlet or back outlet elbow.

Branch Pipe.—A very general term used to signify a pipe either cast or wrought, that is equipped with one or more branches. Many such pipes are used so frequently that they have acquired common names such as tees, crosses, side or back elbows, manifolds, double branch elbows, etc. The term branch

pipe is generally restricted to such as do not conform to usual dimensions.

Branch Tee; Header.—A tee having many side branches.

Brass Mounted.—When used to describe a globe, angle or cross valve, it usually means that the valve has a brass bonnet, stem, seat, ring and disc. When used to describe gate valves, usually means brass stem, seat, ring and wedge or disc ring.

Brazed.—Connected by hard solder which usually is copper and zinc—half and half. Such solder requires a full red heat and is commonly used with borax flux.

Breeches Pipe.—A Y-shaped pipe used for many purposes, especially in locomotives, leading the exhaust from the two cylinders to the blast nozzle.

Brick Arch Tube.—One of a series of curved iron tubes, used to support the fire-box arch in certain locomotives, also providing increased heating surface and promoting circulation.

Briggs' Standard.—A list of pipe sizes, thicknesses, threads, etc., compiled by Robert Briggs about 1862 and subsequently adopted as a standard.

Bucket.—The piston of a well pump. It always contains a valve. It is connected to and operated by the sucker rods.

Bull-Head Tee.—A tee whose branch is larger than the run.

Bumped.—Convex when applied to cylinder heads.

Bumped Joint.—One having the end on one pipe so expanded that the end of another may be driven in until the rivet holes register. By slightly tapering both ends it is practical to increase the ease of erection and lessen the calking required.

Bushing.—A pipe fitting for the purpose of connecting a pipe with a fitting of larger size, being a hollow plug with internal and external threads to suit the different diameters. See Flush Bushing.

Butted and Strapped Joint.—A joint where the ends of two pieces of pipe are united by a sleeve and riveted thereto. The strap may be inside or outside and may be single or double riveted.

Butterfly.—The name applied to certain valves made after the design of a damper in a stove pipe. In pumps this term signifies a double clack valve whose flaps work on a diametral hinge, like the wings of a butterfly.

Butt Weld.—Welded along a seam that is butted and not scarfed or lapped.

By-Pass.—A small passage to permit equalizing the pressure on the two sides of a large valve so that it may be readily opened (or closed).

By-Pass Valve.—A small pilot valve used in connection with a larger valve to equalize the pressure on both sides of the disc of the larger valve before the larger valve is opened.

C.

Caliber.—An expression which is often used to mean the inner diameter or bore.

Calking.—In iron working, the calking consists of striking a chisel, or calking tool with a hammer, making a slight indentation along the seam. The effect of this is to force the edge of one plate hard against the other, and thus fill up any slight crevice between the plates which the rivets failed to close. The term is used in connection with lead joints or bell and spigot joints in which case the lead is calked.

Calking Recess.—A counterbore or recess in the back of the flange into which lead may be calked for water, or copper for steam.

Calking Tool; Calking Iron.—A blunt-ended chisel used in calking.

Cap.—A fitting that goes over the end of a pipe to close it, producing a dead end.

Card Weight Pipe.—A term used to designate standard or full-weight pipe, which is the Briggs' standard thickness of pipe.

Casing.—A term applied to pipe when used to case an oil or gas well. It is usually characterized by light weight and fine threads.

Casing Dog.—In boring, a fishing instrument provided with serrated pieces or dogs sliding on a wedge, to grip several casings.

Casing Elevator.—A well-boring device consisting of two semi-circular clamps with a chain link on either, which are hinged together at one end and secured by a latch at the other. This affords a quickly applied and released attachment for casing to the lifting tackle.

Casing Fitting.—A fitting threaded with a casing thread.

Casing Head.—A fitting used at top of casing of a well to separate oil and gas, to allow pumping, and cleaning out well, etc. There are many forms. In well boring, a heavy mass of iron screwed into the top of a string of casing to take the blows produced by driving the pipe home.

Casing Shoe.—In well boring, a ring or ferrule of hard steel with a sharp edge, screwed or shrunk on to the bottom of a string of casing, to cut its way through the formation as the casing is forced down.

Chain Tongs.—A pipe-fitter's tool; a lever with a serrated end provided with a chain to enlace the pipe. The chain is wrapped around the pipe to hold the lever in place, and the teeth on the end of the latter grip into the pipe, thus affording a powerful leverage to screw or unscrew the joints.

Chamfer.—To cut at an angle or bevel.

Chasing.—A term that designates the operation of cutting a thread in a lathe, either with hand tools or by power feed. A single cutting point is usually employed, but some mechanics finish by use of a comb or chaser. Pipe threads are seldom chased but are usually cut by taps, dies, etc.

Check.—To prevent flow except in one direction, as applied to valves. To prevent rotation except to full open and full closed, as applied to cocks.

Check Valve.—An automatic non-return valve; or a valve which permits a fluid to pass in one direction, but automatically closes when the fluid attempts to pass the opposite direction.

C. I. F.—A commercial transportation term meaning cost, insurance and freight. It is intended to cover the cost of certain goods at point of destination; and expression of similar usage to F. O. B., but C. I. F. is applied to ocean shipments.

Circular Flange.—A curved or saddle flange.

Circular Weld; Safe-End Weld.—A weld extending around a girth seam. Such welds are sometimes butted, but frequently are scarfed.

Clamp.—See Leak, Pipe, Pouring, Service and Water Pipe Clamp.

Clean-Out Fitting.—One that is equipped with hand hole and cover so that pipes may be cleaned.

Close Nipple.—One whose length is about twice the length of a standard pipe thread and is without any shoulder.

Close Return Bend.—A short cast or malleable iron U-shaped fitting for uniting two parallel pipes. It differs from the open return bend in having the arms joined together.

Coal Tar.—A by-product of the destructive distillation of soft or bituminous coal.

Coating for Pipe.—Usually a coal tar composition sometimes called asphalt. There are many on the market, such as "Sarco" mineral rubber asphalt, California asphalt, Trinidad asphalt, Elaterite, Gilsonite and Dr. Angus Smith's composition. A well-refined coal tar pitch, softening at 60° Fahrenheit and melting at about 110° Fahrenheit, is one of the best and most durable coatings known, when properly applied. See Angus Smith Composition, Asphalting, Galvanizing, Kalameined and Smith's Coating.

Cock.—A device for regulating or stopping the flow in a pipe, made by a taper plug that may be rotated in a body having ports corresponding to the plug. See Bibb, Bleeder, Corporation Four-Way, Gage, Pet, Plug and Telegraph Cock.

Coil.—A number of turns of piping or series of connected pipes in rows or layers for the purpose of radiating or absorbing heat. See Box, Bracket and Expansion Coil.

Cold Drawn; Drawn Cold.—See Drawn.

Collar.—A term used in place of a coupling in such connections as "Kimberley Collars." (Also used to mean threaded pipe coupling.) The sleeve in the back of certain styles of flanges, such as a riveted flange, is called a collar. Again certain style of flanges attached by peening and beading are known as "Collar Flanges."

Collar Flange.—One having sufficient collar on its back to allow it to be securely attached to pipe by peening or riveting.

Common Thread.—In machinery, an ordinary standard machine thread, as distinguished from a pipe thread.

Conduit Pipe.—Wrought pipe used as armor for electric wires.

Converged End.—A term used to signify the beveling in or converging of the ends of certain styles of cylinders, as those used for anhydrous ammonia. Primarily intended to aid in handling by preventing from slipping.

Converse Lock Joint.—A joint for wrought pipe which is made up with a cast-iron hub. The joint is made by placing rivets in the ends of the pipe which, in turn, lock in slots in the cast-iron hub. The lock is so shaped as to have a wedging action in drawing the pipe tight against a ring in the center of the hub, after which the pipe is leaded in place and calked.

Corporation Cock.—A term usually applied to the cock attached to a street main, owned and operated by or under the supervision of a supply corporation. It is distinct from the more accessible curb cock which is placed in the service line for convenience. Its essential peculiarities are usually that it has one threaded end, a heavy body and plug large enough to permit a drill to be operated through it—the diameter of the drill being the nominal size of the cock.

Corrugated Joint.—A short length corrugated like an accordion or corrugated fire box. It allows a limited movement but requires great force to distort, unless made so thin that it requires hooping for ordinary pressures.

Counterbored.—Bored to a diameter larger than the adjacent hole. See Recessed.

Countersink.—A tool used to chamfer the mouth of a hole. The operation that uses a countersink tool.

Countersunk.—Having the shape given by the use of a countersink. Also applied to certain type of plug which has an opening depressed to receive square wrench. When applied to fittings means chamfered at an angle of 45° at the tapped opening.

Coupling.—A threaded sleeve used to connect two pipes. Commercial couplings are threaded inside to suit exterior thread of pipe. The term coupling is occasionally used to mean any jointing device and may be applied to either straight or reducing sizes. See Pipe, Socket, Steam and Union Coupling.

Cressed.—Reduced about $\frac{1}{8}$ inch in diameter for a short distance at ends. A foreign term used on artesian well casing.

Cressed Artesian Joint.—A British term used to describe a joint that requires unusual perfection of workmanship. It may be specified thus: Ends of pipe cressed exactly one-half length of coupling; pipe threaded straight and exactly true to general axis thereof; end of pipe faced true to same axis; vanish of thread (or lead of dies) ground to exactly same taper as countersink of coupling; coupling tapped straight and countersunk each end, same as lead of dies; coupling nicely beveled at long taper so that there is no shoulder at joint; ends must butt at same time as vanish screws home.

Cross.—A pipe fitting with four branches arranged in pairs, each pair on one axis and the axes at right angles. When the outlets are otherwise arranged the fittings are branch pipes or specials.

Cross-Over.—A small fitting like a double offset or the letter "U" with ends turned out. It is only made in small sizes and used to pass the flow of one pipe past another when the pipes are in the same plane.

Cross-Over Bend.—A bent pipe used for the same purpose as the cross-over fitting.

Cross-Over Tee.—A fitting made along lines similar to the cross-over, but having at one end two openings in a tee head whose plane is at right angles to the plane of the cross-over bend.

Cross-Tube.—In boiler making, a coned or Galloway water tube placed transversely across a fire box or furnace flue to increase the heating surface and improve circulation.

Cross-Valve.—A valve fitted on a transverse pipe so as to open communication at will between two parallel lines of piping. Much used in connection with oil and water pumping arrangements, especially on ship board. Usually considered as an angle valve with a back outlet in the same plane as the other two openings.

Crotch.—A fitting that has the general shape of the Roman letter "Y." Caution should be exercised not to confuse the crotch and wye.

Crushing Test.—A term describing test applied to tubes whose material is tested the same as the "bending test" for plates and bars. When applied to tubes, it is customary to take a ring or crop end from the tube and crush, so that the weld comes at the points of shortest radius of curvature, which is usually specified to be equal to three (3) times the thickness—under which condition the weld must not open nor material crack.

Cup and Ball Joint.—In gas fitting, a ball and socket joint fitted to hanging gas chandeliers. It allows the chandelier to turn freely without escape of gas.

Cup Joint.—In plumbing, a lead joint in which one pipe is tapered to fit into a flared out cup on the other, and the joint soldered.

Cupping.—Means nearly the same as flanging a head, but the cupping process forms a flat disc into a flanged head and then, by repeating the operation and giving draft (drawing the metal), forms a deep head; then a cup; then a deep cup; then a tube which, by repeating the process a sufficient number of times, becomes a long, thin pipe.

Curved Flange.—See Saddle Flange.

Cut Length.—A term used to signify that the pipe is cut to length ordered.

Cylinder.—A term used to designate any tank, drum, retort, receiver or reservoir, etc., that is made of pipe and closed at both ends, except such test hole as must always be allowed. See Converged End, Dished Head, Drum and Flat Head.

D.

Dead End of a Pipe.—The closed end of a pipe or system of pipes.

Die.—The name of a tool used for cutting threads usually at one passage. The essential distinctive feature of a die is its multiple cutting edges, while a chasing or threading tool usually has one, or, at most, only a few cutting edges. Some dies are highly complex and ingenious pieces of mechanism, equipped to trip after cutting a certain predetermined number of threads. See Master and Pipe Die.

Dip Pipe.—A valve in a gas main, so arranged as to dip into water and tar, and thus form a seal. Called also a seal pipe.

Dished.—Concave when applied to cylinder heads.

Dog.—See Casing Dog, Dog Guard, Pipe Dog and River Dog.

Dog Guard.—The name used to designate the sleeve that is frequently swaged and shrunk about an electric line pole, for

short distance, above and below the ground line, in order to prevent corrosion of the pole at the ground line. It is the ordinary name of the "patent protecting sleeve" applied to electric poles.

Double Bend.—A pipe or fitting shaped like the letter "S" in outline.

Double Branch Elbow.—A fitting that, in a manner, looks like a tee as though two elbows had been shaved and then placed together, forming a shape something like the letter "Y" or a crotch.

Double Extra Strong.—The correct term or name of a certain class of very thick pipe, which is often, less correctly, called double extra heavy pipe.

Double Sweep Tee.—A tee made with easy curves between body and branch, *i. e.*, the center of curve between run and branch lies outside the body. This is in contradistinction to the short fillet between body and branch of standard tees.

Drainage Fittings.—Those that have their interior flush with I. D. of pipe, thereby securing an unobstructed surface for the passage of solid matter.

Drawn.—The term applied to that style of forging by which the thickness is reduced and also, at times, the diameter—by pushing or pulling the material through a die and over a mandrel or plug at the same time. In some cases the mandrel is long and moves at nearly the same speed as the tubes, but in other cases, the mandrel is anchored so as to hold it within the die. When there is no inside mandrel, it is not called drawn product. See Cold and Hot Drawn.

Dresser Joint.—A peculiar form of Normandy joint. There are various styles.

Drifted.—Having had a drift or short mandrel passed through the pipe in order to be certain that there are no inside irregularities or that they have thereby been removed. It is also, but less correctly, called plugged. Enlarged by forcing

through a tapered mandrel. This meaning of the word is uncommon in the pipe trade.

Drill.—See Pole and Shot Drill.

Drilled.—Used in connection with flanges to indicate that the bolt holes have been made by a drill, *i. e.*, not made by cores.

Drilling Machine.—A name often applied to a tapping machine because many machines drill and tap.

Drive Head.—Protecting end attached to the top of drive pipe and casing, etc., also called drive caps.

Drive Pipe.—A pipe which is driven or forced into a bored hole, to shut off water courses, or prevent caving.

Drive Pipe Joint.—A threaded joint in which the pipe butts in the center of the coupling.

Drive Pipe Ring.—A device for holding drive pipe while being pulled from well. It means nearly the same as elevator but the device is very different.

Drive Shoe.—A protecting end attached to the bottom of drive pipe and casing.

Drop Elbow.—A small-sized ell that is frequently used where gas is put into a building. These fittings have wings cast on each side. The wings have small countersunk holes so that they may be fastened by wood screws to ceiling or wall or framing timbers.

Drop Tee.—One having the same peculiar wings as the drop elbow.

Drum.—Package used in shipping fittings and valves. A short cylinder of large diameter having flat heads, but often used for a cylinder of any style.

Dry Joint.—One made without gasket or packing or smear of any kind, *e. g.*, ground joint.

Dry Pipe.—A slotted or perforated steam collecting pipe within a boiler insuring dryness.

E.

Eccentric Fitting.—One having its openings on center lines that are not concentric, usually arranged so that the interior walls of one side are in one plane. So arranged for draining condensation.

Eckert Joint.—A special design of a form of Armstrong joint.

Education Pipe.—The exhaust pipe from the low-pressure cylinder to the condenser.

Eighth Bend.—A bent pipe whose curved portion defects the line one-eighth of a circle to $(360°/8=45°)$. At times applied to the cast fitting which is more properly called a 45° elbow.

Elbow; Ell.—A fitting that makes an angle between adjacent pipes. The angle is always 90° unless other angle is stated. See Back Outlet, Branch, Double Branch, Drop, Heel Outlet, Reducing Taper, Return, Service, Side Outlet, Street, Three Way and Union Ell.

Elevator.—A device for raising or lowering tubing, casing or drive pipe from or into well. See Casing Elevator.

Ell.—See Elbow.

End.—See Plain and Safe End.

Exhaust Relief Valve.—Nearly the same meaning as a check valve. They are used with condensing engines to allow atmospheric exhausts when condenser is not working. They may be loaded so as to act as back pressure valves.

Expanded End Tube; Swelled-End Tube.—These terms are used interchangeably. See Swelled.

Expanded Joint.—A term at times applied to the joint used on casing and which is correctly called "inserted joint."

Expansion Coil.—The series or coils of pipe placed in a refrigerating box or brine tank, in which the ammonia vaporizes after passing through an expansion valve.

Expansion Diaphragm.—An expansion joint of very limited travel which it obtains by buckling the diaphragm. If the diaphragms are corrugated, it is capable of greater motion.

Expansion Joint.—A device used in connecting up long lines of pipe, etc., to permit linear expansion or contraction as the temperature rises or falls. Usually patterns consist of a sleeve secured to one length of pipe, which works within a stuffing box attached to the next length. There are several, such as slip, swing, balanced, diaphragm, loop, swivel, etc. All are intended to accommodate the change in length due to changes in temperature.

Expansion Loop.—Either a bend shaped like the letter " U " or a coil like a " pig tail."

Expansion Pipes.—In cold storage, those pipes within the refrigeration chambers in which the ammonia or other agent changes into a gas under release of pressure, drawing heat in the process from its surroundings.

Expansion Ring.—A hoop or ring U section used to join lengths of pipe together so as to permit of expansion, as the well-known Bowling hoop for boiler furnace flues.

Expansion Valve.—A valve used to control flow of ammonia (or other refrigerant).

Extra Heavy.—When applied to pipe means pipe thicker than standard pipe; when applied to valves and fittings is to indicate goods suitable for a working pressure of 250 pounds per square inch.

Extension Piece.—Usually a malleable iron nipple with male and female thread.

Extra Strong.—The correct term or name of a certain class of pipe, which is heavier than standard pipe and not as heavy as double extra strong pipe. Often less correctly called extra heavy pipe.

F.

Faced After.—A term used on flanged work to mean that flanges are faced after they are attached to pipe and that ends of pipe are faced flush with flange, both being at right angles to general axis of pipe.

Faucet.—A device to control the flow of liquid. Originally a hollow plug with a transverse hole in which was placed the spigot. This latter was later bored and equipped with a handle now made in great variety of forms. Commonly called a tap and used in house plumbing to draw water. Enlarged end of pipe to receive the spigot end of another pipe; *i. e.*, a bell end.

Ferro Steel.—A special grade of steel that is intermediate in strength between cast iron and cast steel.

Ferrule.—A short piece of steel or copper pipe placed between tubes and tube sheet of boiler. At times they are welded to tube. See Tube Ferrule.

Field Joint.—For poles is made by swaging the inserted end to a uniform taper, about ¼ inch in 18 inches, and then swaging the exterior pipe so that its interior has same taper and size, due allowance being made for shrinkage. It is assembled by placing the two sections accurately in line, but separated a few inches, the lighter section being on rollers. The bell end is then heated by wood fire to a full red heat, and the other end slid in and the whole allowed to cool. The joint in a pipe line which is made in the field.

Field Tube.—An arrangement of two concentric tubes, which greatly improves the circulation and steaming capacity of a vertical boiler; and heated water rises in the annulus between the inner tube and the exterior heating surface, while the cold water circulates down the inner tube.

Fire Hydrant.—A hydrant suitable for serving fire hose or engines.

Fire Plug.—See Fire Hydrant.

Fittings.—A term used to denote all those pieces that may be attached to pipes in order to connect them or provide outlets, etc.—except that couplings and valves are not so designated. See Ammonia, Back Outlet Ell, Branch Ell, Branch Tee, Bull-Head Tee, Bushing, Cap, Casing, Clean Out, Cross, Cross-Over, Cross-Over Tee, Crotch Double Branch Ell, Double

Sweep Tee, Drainage, Drop Elbow, Drop Tee, Eccentric. Elbow, Four-Way Tee, H Branch, Heel Outlet Elbow, Increaser, Inverted, Kewanee, Lateral, Long Turn, Manifold, Pipe, Plug, Railing, Reducer, Reducing Taper Elbow, Reducing Tee, Return Bend, Return Elbow, Saddle, Service Ell, Service Tee, Siamese Connection, Side Outlet Ell, Side Outlet Tee, Street Elbow, Tee, Three-Way Elbow, Union, Union Ell, Union Tee, Wye and Yoke.

Flange.—A projecting rim, edge, lip or rib. See Blank, Blanking, Blind, Boiler, Circular, Collar, Curved, Internal, Peened, Pressed, Reinforced Pump Column, Riveted, Rolled Steel, Saddle and Spun Flange.

Flanged.—When applied to a fitting it is used to distinguish from screwed fittings which are always furnished, unless flanges or other style of joint is specified. When applied to pipe it means fitted with flanges.

Flanged Joint.—A joint in pipes made by flanges bolted together.

Flanged Pipe.—Pipe provided with flanges so that the ends can be held together by means of bolts.

Flange Union.—A fitting consisting of a pair of flanges and bolts to connect them for use on threaded pipe. Compare union and lip union.

Flat Head.—Term applied to heads of cylinders meaning that they are neither convex nor concave. Meaning shape of head when applied to brass or iron cocks.

Flexible Joint.—Any joint between two pipes that permits one of them to be defected without disturbing the other pipe.

Flue.—A British term used in the same sense as the term "tube" is used in America.

Flue Boiler.—A boiler having smoke flues which pass through the water. When there are many flues of small size the term "tubular boiler" is more usual.

Flue Cleaner; Tube Cleaner.—Frequently a wire brush or soot scraper. At times called a "flue brush."

Flush Bushing.—A fitting intended to reduce the opening of a given fitting by screwing in flush with the face of the fitting.

Flush Joint.—A threaded joint made by turning off nearly half the thickness of the pipe at one end and boring in same manner at the other end, and then threading with a fine thread.

Follower.—A half coupling or locknut used on a long screw. See Long Screw.

Four-Way Cock.—A cock so designed that the body has four passages and the plug has two passages. It may serve to control the flow of both a supply and exhaust.

Four-Way Tee.—A side outlet tee (poor usage).

Free on Rails.—Signifying that all charges save those of railway transportation are paid by the vender.

Full-Way Valve.—A sluice or gate valve for steam, etc., contrived to give a full bore opening of the same area as the pipe. Used in error at times to signify a straight-way valve.

Full-Weight Pipe.—A term used to designate standard or card-weight pipe, which is the Briggs' standard thickness of pipe.

G.

Gage.—The main gages used in the pipe trade are threaded plug and ring gages.

Gage Cock.—A small cock in a boiler at water-line, to determine the water level.

Gage Length.—The distance gage goes on threaded end of pipe by hand. Used synonymously for cut lengths.

Gage Ring.—A ring used for gaging the thread on pipe.

Galvanizing.—The process by which the surface of iron and steel is covered with a layer of zinc.

Gasket.—A thin sheet of composition or metal used in making a joint.

Gas Thread.—Briggs' standard in America; but in England use is indefinite, though it usually means Whitworth thread on 4 inches and under.

Gate Valve.—A sluice; one having two inclined seats between which the valve wedges down in closing, the passage through the valve being in an uninterrupted line from one end to the other, while the valve when opened, is drawn up into a dome or recess, thus leaving a straight passage the full diameter of the pipe.

Globe Valve.—A valve having a round, ball-like shell, it is much in use for regulating or controlling the flow of gases or steam.

Go-Devil.—A scraper with self-adjusting spring blades, inserted in a pipe line, and carried forward by the fluid pressure, clearing away accumulations of paraffin, etc., from the walls of the pipe. In the oil-well country this term is applied to a device for exploding the nitroglycerine used to "shoot" an oil well.

Goose Neck.—A return or 180° bend having one leg shorter than the other.

Ground Joint.—See Dry Joint.

Grummet or Grommet.—A "cow tail" (frayed end of a piece of rope or twine) smeared with red lead in oil and used about the threads to make a tight joint in British pipe fitting practice.

H.

Half-Turn Socket.—In oil-well drilling, a fishing tool having jaws bent around in an incomplete circle, to embrace lost tools lying against the side of the well.

Hand Tight.—Tightened by hand with such effort as an average man can continuously exert. It does not refer to such forcing as can be done by a man picked for his strength. The standard gages are correct as to size when put on hand tight.

Hard Solder; Brazing Solder.—It usually is copper and zinc half and half by weight. Other alloys are used for special work; frequently, pure copper is used. The usual flux is borax.

Hazleton Head.—One formed by swaging the end of a pipe nearly to a point, and then welding up the end, either alone or

after insertion of rivet or button. The head, when finished, is nearly hemispherical.

H Branch.—In plumbing, a pipe fitting having a branch parallel and close to the main line.

Head.—See Bumped, Casing, Dished, Drive, Flat, Hazelton and Patterson Head.

Header.—A large pipe into which one set of boilers are connected by suitable nozzles or tees, or similar large pipes from which a number of smaller ones lead to consuming points. Headers are often used for other purposes, such as heaters or in refrigeration work. Headers are essentially branch pipes with many outlets, which are usually parallel. Largely used for tubes of water-tube boilers.

Heel Outlet Elbow.—See Branch Ell.

Horn Socket.—In well boring, an implement to recover lost tools, especially broken drill poles, etc. It consists of a conical socket, the larger end downwards, which slides over the broken part, a spring latch gripping it when entered. Frequently a flaring mouthpiece is riveted to the horn socket, making it a bell-mouth socket.

Hot Drawn.—A term used to signify the product of drawing, when the operation is performed on material that is hot—usually red hot; *e. g.,* hot-drawn seamless tubes. The term is sometimes applied to the Mannesmann product that has not been drawn.

Hot Tube.—A tube or pipe lined inside with porcelain, to enable it to withstand firing through without excessive oxidization.

Hub.—Usually means a cast-iron outside ring or collar used to join two pipes. Bell end of cast-iron pipe, or similar end in fitting or valve. Collar of a flange.

Hydrant.—An outlet placed at or near a main, and provided with a valve to control flow, and with an end suited to attach hose. Those made to serve fire hose, or engines in cold climates, usually have the valve below the frost line, and are so arranged,

that when the flow is shut off, the hydrant will drain to prevent freezing up.

Hydraulic Main.—In gas making, the large pipe, partly filled with water, into which the dip pipes discharge the gases, etc., coming from the retorts.

Hydrostatic Joints.—Used in large water mains, in which sheet lead is forced tightly into the bell of a pipe by means of the hydraulic pressure of a liquid, preferably tar.

I.

Increaser.—In plumbing, a fitting to join the female end of a small pipe to the male end of a larger pipe. This is the name applied, at times, to a special type of reducer, whose large end may be male end for any type of joint and whose small end is always female and tapped for standard pipe (poor usage).

Indicator.—A device placed at a valve or fire hydrant and so arranged that it shows whether the valve is open or closed.

Inserted Joint.—The correct name of the joint which at times is called "expanded joint" or "swelled joint." The joints are formed by expanding one end of each pipe so that, when threaded on their interior, they permit screwing in the exteriorly threaded ends that have not been expanded. It is employed mostly on casing.

Internal Feed Pipe.—A pipe perforated at the end, leading the feed water from the check valve opening through the hotter portions of the boiler to the coldest, thus assisting circulation, and gradually introducing the feed water without shock.

Internal Flange.—A flange that projects from the inner surface toward the center. Used in contradistinction to external flange, which is always meant when the word flange is used without qualification.

Inverted Fitting.—In plumbing, a fitting reversed in order of position upside down—turned in contrary direction.

J.

Jars.—In well boring, a connection between the sinker bars and the poles or cables, made in the form of two links, having a slide on each other of about 2 feet. The jars permit the tools to fall on the downward stroke, but on the upward jar them, or give them a sharp pull, tending to loosen them from any crevices or cavings that may hold them; a drill jar.

Joint.—In the pipe trade, applies to the means used to connect pipes to each other or to fittings. See Ammonia, Armstrong, Artesian, Ball, Bell and Spigot, Block, Bumped, Butted and Strapped, Converse Lock, Corrugated, Cressed Artesian, Cup, Cup and Ball, Dresser, Drive Pipe, Dry, Eckert, Expanded, Expansion, Field, Flanged, Flexible, Flush, Ground, Hydrostatic, Inserted, Kimberley, Knock-Off, Lead, Lead and Rubber, Line Pipe, Matheson, National, Normandy, Peened Flanged, Perkins, Petit's, Pope, Pressure, Riedler, Rust, Shrunk, Siemens, Slip, Socket, Spigot, Swing, Swivel, Thimble, Union, Van Stone, Walker, Welded Flange and Wiped Joints.

Jointer.—A pipe trade term used to express a random length composed of two pieces coupled together. Custom of the pipe trade is that shipments include a small proportion of such lengths. The term jointer also is applied to very small style of flanges that are suitable for connecting pipes to each other, but not suitable for connecting to fittings.

K.

Kalameined.—Coated in a manner similar to galvanizing, but using a composition of lead, tin and antimony.

Kewanee.—As applied to fittings and valves this word indicates that the "Kewanee" union principle is involved.

Kewanee Union.—A patented pipe union having one pipe end of brass and the other of malleable iron, with a ring or nut of malleable iron, in which the arrangement and finish of the

several parts is such as to provide a non-corrosive ball and socket joint at the junction of the pipe ends, and a non-corrosive connection between the ring and brass pipe end.

Kimberley Joint.—Originally a joint of English manufacture extensively used in the South African Mining District. It consists of an outer wrought sleeve or ring belled out on the ends to form a suitable lead recess for calking, the pipes butting in the center of the sleeve.

Knock-Off Joint.—In well drilling, a joint used in the rods of deep well pumps. The jointed ends of the rods are enlarged to a square section and scarfed and notched to fit against one another, and are confined by a clasp or bridle embracing them. The joint is tapered lengthwise and the hole in the clasp is tapered to correspond, so that the tendency is always for the clasp to tighten around the joint.

L.

Laid Length.—The length measured after pipe is placed in position. It is not the same as the "shipped length," which latter is measured over all as shipped, and it is greater than the "cut length," which applies to length of tubular goods only. The laid length includes such items as gaskets or space between ends of pipe in coupling or the insertion of bell and spigot joint or the central rings of C. J. hub. Laid length is never considered unless order clearly refers to it. To specify it on an order or a drawing always delays execution, unless every essential detail is given.

Lap-Weld.—Welded along a scarfed longitudinal seam in which one part is overlapped by the other.

Laterals.—See Wye.

Lead.—The advance made by one turn of a screw. Often confused with pitch of thread, but not the same unless in the case of a single thread. With a double thread, the lead is twice as much as the pitch.

Lead and Rubber Joint.—The ordinary name for any joint in which lead and rubber are employed. The combination of Matheson joint and Dresser clamp is not usually called by this name but acts in the same manner.

Lead Joint.—Generally used to signify the connection between pipes which is made by pouring molten lead into the annular space between a bell and spigot—and then making the lead tight by calking. Rarely used to mean the joint made by pressing the lead between adjacent pieces as when lead gasket is used between flanges.

Lead Joint Runner.—See Pouring Clamp.

Lead-Lined Pipe.—A wrought pipe having a continuous interior lining of lead. When used on flanged pipe the lining is often brought out over the face of the flanges. The lead lining is usually as thick as the same size of lead pipe. It is useful for conducting certain corrosive fluids.

Lead Wood.—A material used in place of melted lead for making pipe joints. It is lead fiber, about as coarse as fine excelsior and when made in a strand it can be calked into the joints making them very solid.

Leak Clamp.—Packing clamp—half-dresser joint—usually superposed on some other joint as that made with a coupling.

Line Pipe.—Special brand of pipe that employs recessed and taper thread couplings, and usually greater length of thread than Briggs' standard. The pipe is also subjected to higher test.

Line Pipe Joint.—The screwed joint used on line pipe.

Lip Union.—A special form of union characterized by the lip that prevents the gasket from being squeezed into the pipe so as to obstruct the flow. It is a ring union, unless flange is specified.

Locknut.—A nut placed on a parallel threaded portion of pipe at a joint in order to stop leaks by means of a grommet, gasket or packing. Also used to make a joint where the long

screw or locknut nipple has been run through the tank, the locknuts being used to wedge up against the tank on either side.

Long Length.—A length of pipe greater than can ordinarily be made from one length of plate. The long length is made by uniting two pipes by a circular or safe end weld. Long lengths —less than 40 feet—can be produced in one piece, without weld, by certain processes.

Long Screw.—A short length of pipe having ordinary thread on one end, and the other end threaded for such distance as will allow a locknut and a coupling to be screwed by hand without overhanging the end of pipe. It is used in making up connections or joining lines in place.

Long Screw Follower.—A half coupling or locknut used on a long screw.

Long Turn Fitting.—A term variously employed to mean long sweep, long radius or an angular branch; *e. g.*, a long turn branch may be one whose branch makes about 45° with the run, but end of branch is sharply turned to 90° to run.

Loop.—See Expansion Loop.

M.

Male and Female.—Sometimes called recessed; usually written M. & F. It means that one flange of a pair is faced so as to produce a flat, depressed face, extending from inside of pipe nearly to bolt holes. The other flange is faced so as to have a raised portion at same place and only slightly less diameter. The object is to prevent the gasket from blowing out. Also means male and female.

Malleable Iron.—Cast iron made from pig iron of the proper kind, so treated as to render it capable of being bent or hammered to a limited extent without breaking, that is, it is malleable. Its strength is above that of cast iron. The treatment is known as annealing.

Mandrel Socket.—A well tool for straightening out the top of casing, etc., within a well, consisting of a lemon-shaped swage within a cone or bell-mouth, by means of which the casing is worked to a circular shape. Also useful for straightening a lost sand pump, etc., so that the dogs may enter.

Manifold.—A fitting with numerous branches used to convey fluids between a large pipe and several smaller pipes. See Branch Tee. A header for a coil.

Mannesmann.—A name applied to the product of tube making process, invented by Herr Mannesmann.

Master Die.—A die made standard and used only for reference purposes or for threading taps.

Master Tap.—A tap cut to standard dimensions and used only for reference purposes or for tapping master dies.

Matheson and Dresser Joint.—A combination joint in which a Dresser leak clamp of special form is used to reinforce a Matheson joint. Its special advantage is that it allows repair without shutting off the service pressure. Much used on natural gas lines on service pressures up to 250 pounds and at times up to 500 pounds, and on pipes 16 inches outside diameter and less—even on 20 inches outside diameter.

Matheson Joint.—A wrought pipe joint made by enlarging the one end of the pipe to form a suitable lead recess, similar to the bell end of a cast-iron pipe, and which receives the male or spigot end of the next length. Practically the same style of a joint as used for cast-iron pipe.

Measurement Equals Weight.—A commercial transportation term indicating that the specific weight is high enough to secure the freight tariff that is based on weight under steamer's measurements for ocean transit.

Medium Pressure.—When applied to valves and fittings, means good for a working pressure of 125 to 175 pounds per square inch.

Melting Furnace.—A small portable furnace (some designs are mounted on wheels) used for melting lead for lead joint pipe.

Mounted.—When applied to pipe fittings, valves, etc., in such expressions as brass mounted, nickel mounted, etc., means having the rubbing or wearing surface composed of material named.

N.

National Joint.—A bell and spigot joint whose bell is contracted at its mouth, so as to retain self-tightening (U-shaped) ring of rubber or other pliable material.

National Pole Socket.—An extension piece for repairing wooden poles that have rotted at ground line. It is a piece of pipe suitably shaped to hold the tapered lower end of upper portion of such pole.

Needle Valve.—At times called a needle-point valve. A valve provided with a long tapering point in place of the ordinary valve disc. The tapering point permits fine graduation of the opening.

Nested.—Having one piece placed within another (*i. e.*, telescoped). A thing that is done with pipes and fittings at times, to get a required weight into a given space. See Steamer's Measurements.

Nipple.—A tubular pipe fitting usually threaded on both ends and under 12 inches in length. Pipe over 12 inches long is regarded as cut pipe. See Close, Long Screw, Short, Shoulder, Space, Sub and Swaged Nipple. Boss or Pop: A thickened or raised place outside or inside of pipe made by welding on a button or pop. It is used on a thin wall when it is desired to tap a hole. These reinforcements are usually flush inside or outside as specified.

Non-Return Valve.—A stop valve whose disc may move independently of the stem so that valve may act as a check. Such valves are largely used between boilers and headers to prevent accidents.

Normandy Joint.—A joint by which the plain ends of two pipes are connected by means of sleeve whose ends are made

tight by rings of packing, compressed between bolting rings and sleeve. There are many similar joints or modifications such as Dayton, Dresser, Hammond, etc.

Nozzle.—A short piece of pipe with a flange on one end and a saddle flange on the other end. May be made of cast iron, cast steel or wrought steel. A side outlet attached to a pipe by such means as riveting, brazing or welding.

Nut.—See Locknut.

O.

Offset Pipe.—A pipe bent so as to offset a line; *i. e.*, move the line to a position parallel to, but in alignment with, balance of the pipe. A fitting to accomplish the same. Erroneously used for cross-over. Erroneously used for bend. Erroneously used for branch pipe.

Open Return Bend.—A short cast or malleable iron U-shaped tube for uniting two parallel pipes. It differs from a close return bend in having the arms separated from each other.

Oval Socket.—In well boring, a fishing tool used to slip over the ends of broken and lost poles, to grip so as to recover them.

P.

Packer.—A device in an oil or gas well to stop flow in or around the casing or tubing. See Water Packer.

Packing.—A general term relating to yielding material employed to effect a tight joint. A common example is the sheet rubber used for gaskets. The term is also applied to the braided hemp or metallic rings used in some joints, that allow considerable or incessant motion. The British grommet is another example. Any material used in packing stuffing boxes of valves.

Patterson Head.—One that has the pipe reduced or swaged to about half its diameter and then a flat head welded in.

Peened Flange Joint.—A term used to indicate that the flanges are attached to the pipe by peening, just as welded flange, riveted flange or screwed flange are terms that indicate the method of attachment of flange to pipe. Many designs—or almost any design—can be so attached. The flanges usually depend in part upon beading of pipe at face, although some designs require grooves inside of collar flange, into which grooves the metal is forced by the peening.

Peening.—The act or process of hammering sheet metals with the peen of a hammer either to straighten them or to impart a desired curvature.

Penstock.—The conductor between forebay and turbine casing. At times that portion of a forebay that is subject to hydrostatic pressure—used for any type of water wheels. A railroad term applied to the pipe for supplying water to locomotive tenders.

Perforated.—That in which holes have been bored or pierced. In pipe it is usually accomplished by drilling holes, but the same result can be accomplished at less cost by punching.

Perkins Joint.—One made up with threaded pipe and coupling both threaded straight (no taper). The one end of the pipe is left square and the other is beveled to a knife edge at mid-thickness. Has been used in Baku oil region.

Pet Cock.—A small cock used to drain a cylinder, fitting, etc. The term means nearly the same as drip or drain cock.

Petit's Joint.—One constructed with a double male and female, in which a round rubber is used.

Pilot.—A small valve to operate or relieve pressure on a larger valve.

Pipe.—A long conducting passage, usually a line of tubes; any long tube or hollow body; especially one that is used as a conductor of water or other fluids, as a drain pipe, water pipe, etc. See Branch, Breeches, Card, Weight, Conduit, Converse Lock Joint, Dip, Double Extra Strong, Drive, Dry, Eduction,

Expansion, Extra Strong, Flanged, Full Weight, Internal Feed, Kimberley Joint, Lead Lined, Line, Matheson Joint, Offset, Plug, Reamed and Drifted, Rifled, Riser, Service, Signal, Siphon, Socket, Soil, S, Stand, Standard, Tail, Tin Lined and Tuyere Pipe.

Pipe Bent.—A bent pipe in contradistinction to a bend, which may be a casting. See Bend.

Pipe-Bending Machine.—An apparatus by which pipe of any ductile metal may be bent or coiled as desired. Some use rollers and internal mandrels or coils, but the most usual type uses formers and saddles and operates without internal mandrel or fitting. The necessity for internal mandrel or fitting is determined mostly by the ratio of the thickness to the diameter. Where the wall is relatively thin something inside appears obligatory to prevent buckling, crumpling or collapsing.

Pipe Clamp.—A metallic strap or bank, made to fit around a pipe, gripping it closely, for the purpose of stopping leaks, etc., a piece of jointing material being usually compressed between the clamp and the pipe.

Pipe Coupling.—A sleeve or socket of cylindrical form with female threads, which receives the ends of two adjacent pipe lengths.

Pipe Covering.—A jacket of non-conducting material placed around steam (or other) pipes to prevent loss of heat.

Pipe Cutter.—An instrument for cutting off wrought pipes. A common type is made with a hook-shaped frame on whose stem a slide can be moved by a screw. On the other slide or frame one or more cutting discs are mounted, and forced into the metal as the whole appliance is rotated about the pipe.

Pipe Die.—A tool for cutting external threads on pipes. Many types are composite with inserted cutters.

Pipe Dog.—A hand tool that is much used to rotate a pipe whose end is accessible. It is simply a small, short steel bar

whose end is bent at right angles to the handle, and then quickly returned, leaving only enough space between the jaws to slip over the wall of pipe.

Pipe Fittings.—Connections, appliances and adjuncts, designed to be used in connection with pipes, such as elbows and bends to alter the direction of a pipe; tees and crosses to connect a branch with a main; plugs and caps to close an end; bushings, diminishers or reducing sockets to couple two pipes of different dimensions, etc. See Fittings.

Pipe Grip.—In steam and pipe fitting, an implement consisting of an iron bar with a curved end and provided with a chain of square links to hook on to the jaws of the curved end. See Chain Tongs.

Pipe Hanger.—A suspension link or band (often split) used to support a pipe without interfering with its expansion and contraction.

Pipe Line.—A line of pipe used for the transporting of liquids or gases. It has an entirely different meaning from "line pipe," which see.

Pipe Roller.—In construction work, these are made of different lengths of wrought pipes to suit the work, and used as rollers for moving heavy articles and machinery.

Pipe Stay.—A pipe hanger—an unusual term.

Pipe Stock.—A holder for dies by means of which threads are cut on pipes by hand.

Pipe Thread.—A thread employed in connection with wrought pipe. The standard thread is the Briggs', which has an angle of 60° between its sides, slightly rounded at top and bottom, and which has a taper. See Briggs' standard.

Pipe Tongs.—A hand tool for gripping or rotating pipe. It is frequently made like a large pair of pliers, one of whose noses is hook-shaped and the other is made shorter and sharpened so as to dig into the pipe. Chain tongs and pipe wrenches are used for about the same purpose.

Pipe Unions.—Erroneously used, at times, to signify pipe joints.

Pipe Vise.—A special type of vise usually attached to work bench. It is frequently made with three serrated jaws, one of which moves between the other two and may be forced against the pipe by screw or toggle. At times made with an open or latching side to permit rapid work.

Pipe Wrench.—A wrench whose jaws are usually serrated and arranged to grip with increasing pressure as the handle is pulled. There are many forms such as the Alligator, Stillson, Trimo, etc.

Piping.—In plumbing, steam and gas fitting, the whole system of pipes in a factory, mill or house; the act of laying a pipe system.

Pitch.—The distance measured on a line parallel to the axis, between two adjacent threads or convolutions of a screw. The distance between the centers of holes, as of rivet holes in boiler plates.

Plain End.—Usually contracted to P. E. Used to signify pipe cut off and not threaded; *i. e.*, ends left as cut.

Plug.—When used without qualification, it always means in the pipe trade, the ordinary plug or pipe plug that has an exterior pipe thread and projecting head (usually square), by which it is screwed into the opening of a fitting, etc. Compare countersunk plug. The movable part of tap, cock or faucet. Colloquially used for hydrant, penstock, standpipe, water plug, etc. See Socket, Tap, Tube and Water Plug.

Plug Cock.—Usually called a cock. All cocks are essentially plug cocks.

Plug Gage.—A plug or internal gage for measuring inside dimensions.

Plug Pipe.—A short piece of pipe, screwed with a male thread at one end and closed or welded at the other, used as a plug to close another pipe or an opening in a fitting, when a proper plug is not obtainable.

Plug Tap.—A tap with threaded portion straight or without lead, used for bottoming.

Pole Drill.—In well boring, a system where a rigid connection is used between the drilling tools and the reciprocating beam.

Pop.—A spring loaded safety valve. A boss or nipple cast on a fitting or welded to a pipe.

Pope Joint.—A joint very similar to the Van Stone. In one form the flange is separately formed and welded to the pipe.

Pouring Clamp; Lead Joint Runner.—Some forms are made of metal, others of rubber and others asbestos. The commonest make-shift is a piece of frayed rope smeared with clay. All styles serve to guide the lead into space provided for it in lead joint pipe.

Pressed Flange.—Usually signifies a light style of flange, made from plate steel by press forging or forming. When the flange is so made of heavy stock, whose thickness is changed by the forging, it is better to call the product press forged. Some flanges are press forged part way and then rolled. See Rolled Flanges.

Pressed Forged.—A term used to indicate the operation of forming by steady pressure as distinguished from forging by hammering or rolling or drawing. The distinction between "press forging" and "press forming" is that the former changes the thickness or section materially, while the latter only changes the form and may incidentally change the section or thickness.

Pressure Joint.—A term used by British trade to signify that the threads of both pipe and coupling are tapered. It closely corresponds to American joints used on line pipe, casing or tubing, etc.

Protector.—A ring threaded on its inside and used to protect threaded end of pipe during transit.

Pump Column Flange.—See Reinforced Pump Column Flange.

R.

Radiator.—That which radiates or sends forth heat, as by a coil of steam or hot-water heating pipes.

Radiator Valve.—An angle valve such as is fitted to a steam or hot-water heating radiator.

Radius of Bend.—The distance measured always from the center of curvature to the center of pipe, or fitting. The relation between length of radius and size of pipe is modified by the ratio of the pipe's thickness to its diameter; in general the thinner the pipe the longer the radius. The radial distance from the center line of a fitting to the center of curvature, about which the body of a fitting is struck or swept.

Railing Fittings.—Those used on hand rails. There are various styles. To the trade, rail fittings are understood to be globe shaped in the body, with ends reduced to take thread.

Raised Face.—A term used to indicate that flanges are faced $\frac{1}{32}$ inch or so higher inside of the bolt circle.

Random Length.—The "catch length" or length of good quality pipe, made from any piece of plate skelp after its ends have been trimmed. For butt- and lap-weld pipes usually about 20 feet or less.

Reamed.—In pipe trade, means having the burr from cutting-off tool removed from inside, at ends, by a slight countersinking.

Reamed and Drifted.—Usually contracted to R. & D. See the separate terms.

Receiver Filling Valve.—A valve of peculiar construction for the admission of compressed gas to receiver, so that it can be transmitted to the regulators for consumption.

Recessed.—Counterbored for a short distance when applied to couplings. Counterbored or provided at back with a calking recess when applied to flanges. Erroneously applied, at times, to flanges to mean M. & F. to distinguish them from T. & G. or P. F.

Reducer.—A fitting having a larger size at one end than at the other. Some have tried to establish the term "increaser" thinking of direction of flow, but this has arisen from a misunderstanding of the trade custom of always giving the largest size of run of fitting first; hence, all fittings having more than one size are reducers. They are always inside thread, unless specified flanged or for some special joint. Threaded type is made with abrupt reduction. Flanged pattern has taper body. Flanged eccentric pattern has taper body, but flanged at 90° to one side of body. Misapplied at times, to reducing coupling.

Reducing Taper Elbow.—A reducing elbow whose curved body uniformly decreases in diameter toward the small end.

Reducing Tee.—Any tee having two different sizes of openings. It may reduce on the run or branch.

Reducing Valve.—A spring or lever loaded valve similar to a safety valve, whereby a lower and constant pressure may be maintained beyond the valve. A valve for reducing the pressure of air admitted to a train signal pipe below that maintained in the brake pipe and main reservoir.

Reflux Valve.—In hydraulics, a flap valve used for the purpose of taking off the pressure of a head of water acting in a backward direction against a set of pumps.

Reinforced Pump Column Flange.—A flange that is secured to, or fastened to pipe by rivets in addition to being peened and beaded.

Reservoir.—An incorrectly used term to denote a cylinder.

Return Bend.—One hundred and eighty degree bend. Usually a fitting having inside threads. Often applied to a bent pipe. Always means the fitting unless otherwise specified.

Return Bend with Back Outlet.—A crotch having parallel outlet. A return bend with a back or outlet in line with one of the main outlets.

Return Elbow.—A return or U bend of small radius.

Ribbed Tube.—In steam engineering, the ribbed tube introduced with a view to improving the heating surface of the tubes

of feed water heaters. The tubes are simply rolled with internal deep ribs running transversely. They are made in iron, steel, copper and brass. Also called corrugated tubes.

Riedler Joint.—One in which a cup leather is used as packing or gasket. Useful for high pressure.

Rifled Pipe.—A pipe used for conveying heavy oils. The pipe is rifled with helical grooves which make a complete turn through 360° in about 10 feet of length.

Ring.—See Drive Pipe, Expansion and Gage Ring.

Ring Union.—The ordinary union used to connect pipes. The term is used in contradistinction to flange union.

Riser Pipe.—A pipe extending vertically and having side branches.

River Dog.—A device to hold a pipe line on a river bottom.

River Sleeve.—A long sleeve used over other joints to prevent injury to joints laid on river bottom or under water. An excellent form requires sleeves to be about six (6) diameters long and fit as neatly as possible to the outside of the central joint. It is so made to prevent bending or springing of the pipe, which might injure or loosen the joint.

Riveted Flange.—One whose collar is attached to pipe by rivets. The pipe usually is not brought flush with face of flange but stops about 1¼ inches to 1½ inches from center of rivets where it is calked. One special design brings pipe flush with face of flange and another design has end of pipe beaded into a recess.

Rod.—See Sucker Rod.

Rolled Steel Flange.—One that is forged from a steel bloom and then rolled to shape by a mill similar to that used for rolling locomotive or wheel tires. Some small sizes are drop forged, hammer forged or press forged. These processes are all considered to yield rolled flanges, if the product is the required shape. See Pressed Flange.

Run.—A length of pipe that is made of more than one piece of pipe. The portion of any fitting having its ends "in line,"

or nearly so, in contradistinction to the branch or side opening as of a tee. The two main openings of an ell also indicate its run, and when there is a third opening on an ell, the fitting is a "slide outlet" or "back outlet" elbow, except that when all three openings are in one plane and the back outlet is in line with one of the run openings, the fitting is a "heel outlet elbow" or a "single sweep tee," or sometimes (less correctly) a "branch tee."

Rust Joint.—Employed to secure rigid connection. It generally cannot be separated except by destroying some of the pieces. It is made by packing an intervening space tightly with a stiff paste which oxidizes the iron, the whole rusting together and hardening into a solid mass. One recipe is 80 pounds cast-iron borings or filings, 1 pound sal ammoniac, 2 pounds flowers of sulphur, mixed to a paste with water.

S.

Saddle.—Strictly the saddle piece, which, assembled with the strap, or straps, makes a service clamp.

Saddle Flange.—In pipe fitting, a curved flange hollowed out to fit a boiler, a pipe, or other cylindrical vessel.

Safe End.—A short piece of boiler tube of high quality that is, at times, welded to a body of less quality or lighter gage or to old boiler tubes whose ends have been injured.

Sand Line.—In well boring, a wire line used to lower and raise the bailer or sand pump, which frees the bore hole from cuttings.

Sand Pump.—A well-drilling tool used for bailing out the muck produced by drilling.

Scarf Weld.—A joint that is made by overlapping and welding together the scarfed ends or edges of metal sheets.

Screw.—See Long and Temper Screw.

Screw Down Valve.—A valve which is opened and closed against a seat by means of a screw. A term little used in

America, but usual, colloquially, with British workmen. Familiar examples are the needle and globe valves. The term is not commonly applied to slide or sluice valves.

Screwed.—Threaded.

Seamless.—Without seam, especially without a welded seam. Pipes and tubes are made seamless by cupping; Mannesmann or Stiefel process.

Sellers Thread.—The standard screw thread of the United States, having an angle of 60° between the threads, and one-eighth flattened at top and at bottom. It is also known as United States Standard Thread and as the Franklin Institute Standard Thread.

Semi-Steel.—See Ferro Steel.

Service Box.—Small Valve Box. Service Box is the name usually employed for those boxes used with corporation or curb cocks.

Service Clamp.—A clamp applied to a main at a point of connection for such use as a house service. It is also, but less correctly, called "pipe saddle."

Service Ell.—An elbow having an outside thread on one end. Also known as street ell.

Service Pipe.—A pipe connecting mains with a dwelling; as in gas pipes and the like.

Service Tee.—A tee having inside thread on one end and on branch, but outside thread on other end of run. Also known as street tee.

Sherardizing.—A process in which clean surface of iron or steel is coated with zinc-iron alloy to protect against rust.

Shoe.—See Casing and Drive Shoe.

Short Nipple.—One whose length is a little greater than that of two threaded lengths or somewhat longer than close nipple. It always has some unthreaded shoulder between the two threads.

Shot Drill.—An earth boring drill using shot as an abrasive, somewhat after the manner of a diamond drill.

Shoulder Nipple.—A nipple of any length, which has a shoulder of pipe between two pipe threads. As generally used, however, it is a nipple about half way between the length of close nipple and a short nipple.

Shrunk Joint.—A joint secured in place by shrinking a larger pipe on a smaller one. A term at times applied to a form of collar flange that is attached by shrinking the flange on the pipe and then expanding the pipe to a trumpet mouth. This expanded mouth is its distinctive feature.

Siamese Connection.—A crotch fitting, usually arranged with union inlets for fire hose.

Side Outlet Ell.—An ell with an outlet at right angles to plane of run.

Side Outlet Tee.—The same as Four-Way Tee.

Siemens' Joint.—One for high-pressure hydraulic work designed by Dr. Siemens. It is extensively employed on the steam chests of locomotives. Its essential feature is a soft copper wire in a groove.

Signal Pipe.—Pipe made to Signal Association standard as to size, thread, coupling, weight, etc., but not equipped with plugs and rivets. Special pipe used on interlocking switches and their signals on railroads. It has a peculiar joint, that is, both threaded and connected by a plug riveted to the pipe.

Signal Thread.—The thread used on signal pipe. Usually longer than Briggs' standard and of less taper.

Sinker Bar.—A heavy bar of round iron which goes to make up the weight in a string of well-boring tools. The sinker connects the drill bit with the jars, and is sometimes made in two lengths on account of easy handling; in such case, the upper half is sometimes known as the sinker and the lower part as the auger stem.

Siphon.—A pipe bent in the form of ∩ or ∪ acting on the principle of the hydrostatic balance, so that the pressure of water in one leg always tends to equalize that in the other. A

bent tube or pipe with limbs of unequal length for transferring liquids from a barrel or other receptacle. The action of the instrument is due to the difference in weight of the liquid in the two legs. A U-shaped tube fitted to steam gages, etc., so that nothing but water shall enter the gage. In railways, the curved pipe of gradually increasing section which leads from a scoop into the tender.

Siphon Pipe.—A bent tube with unequal limbs by means of which liquids are drawn from a vessel; the shortest limb being placed in the liquid to be drawn off; it is set in action by exhausting the air from the longer.

Skelp.—A piece of plate prepared by forming and bending, ready for welding into a pipe. Flat plates when used for butt-weld pipe are called skelp.

Sleeve.—A coupling, collar or hub—also a special form of converse joint hub that omits the central ring and permits the rivets to pass clear through. See River Sleeve.

Slip Joint.—An inserted joint in which the end of one pipe is slipped into the flared or swaged end of an adjacent pipe. The two pipes are often soldered together.

Smith's Coating.—Dr. Angus. See Angus Smith.

Socket.—A recess or piece furnished with a recess, into which some other piece may be inserted and securely held; as, a socket in the ground for the reception of a post or pole. The British term for what is called a coupling in America. The enlarged and recessed end of a cast-iron pipe into which the opposite end of another pipe is inserted. See Half-Turn, Horn, Mandrel, National Pole, Oval and Wide-Mouth Sockets.

Socket Couplings.—British term for what is known in America as a coupling.

Socket Joint.—The British equivalent of the American term coupling joint.

Socket Pipe.—A pipe fitting, a cast-iron pipe which is provided with a socket on one end and a spigot at the other. The

socket of wrought pipes are couplings, and are screwed over the ends on the outside diameter.

Socket Plug.—In steam fitting, a plug for stopping the ends of pipes or openings in pipe fittings. It differs from the ordinary plug, in that it is provided with a recess into which a wrench fits.

Soft Solder.—Tin and lead alloy.—The first grade is half and half by weight, which melts at a lower temperature than either lead or tin.

Soil Pipe.—In plumbing, a pipe which conveys away the waste from water closets, etc., usually made of cast iron.

Solder.—An alloy used for connecting two pieces that are less easily melted. See Hard and Soft Solder.

Space Nipple.—A nipple with a shoulder between the two threads. It may be of any length long enough to allow a shoulder.

Special Product.—Not standard. Also used to mean a product that is not made to any of the regular lists of goods.

Spellerizing.—The method of treating metal, which consists in subjecting the heated bloom to the action of rolls having regularly shaped projections on their working surfaces, then subjecting the bloom to the action of smooth-faced rolls, and repeating the operation, whereby the surface of the metal is worked to produce a uniformly dense texture, better adapted to resist corrosion, especially in the form of pitting.

Spigot.—The end of a pipe, fitting or valve that is inserted into the bell end. The tapered male part of an inserted joint as in plumber's wiped joint. A cock, tap or faucet used to draw water, etc.

Spigot Joint.—A pipe joint made by tapering down the end of one piece and inserting it into a correspondingly widened opening in the end of another piece. Also called faucet joint (usual).

Spinning.—The operation of changing the shape of a rapidly revolving plate or tube by the action of a spinning tool. In light work the tool is usually similar to a burnishing point, but on heavy work a wheel or revolving head is often used. At times the work is stationary and the tool moves. The product is called "spun work." See Spun Flange.

S. Pipe.—In pipe fitting, a piece whose outline is roughly that of the letter S, used for connecting parallel lengths of straight piping. Also called offset elbow or offset bend.

Spot Faced.—A term used to indicate that an annular facing has been made about a bolt hole, to allow a nut or head to seat evenly.

Spring.—A pipe bent to small angle (poor usage).

Spud; Oil-Well Fishing Tool.—In well boring a tool shaped like a spade, for freeing lost or broken tools by digging around them. A bushing or coupling, by which the hole of a sink or water cooler drip is connected with the drain or drain pipe.

Spun Flange.—A flange formed from the material of the pipe by spinning; *e. g.,* a Van Stone flange may be made by press forming, peening or by spinning.

Squib.—A detonator; in well boring, a vessel containing the explosive and fitted with a time fuse which is lowered down a well to detonate the nitroglycerin used to torpedo it.

Standard Pipe.—The standard adopted by the wrought pipe makers in 1886. The Briggs' standard runs to 10-inch size inclusive, and by extension the pipe sizes embrace the nominal sizes 11, 12, 13, 14 and 15 inches. For the 11- and 12-inch sizes the outside diameter are 11.75 and 12.75 inches, while for 13, 14 and 15 inches the outside diameters are 1 inch larger than the nominal diameter. By later agreement 9-inch size was changed from Briggs' size to 9.625 inches outside diameter. The thickness of all sizes 10 inches and under is determined by Briggs' rule; above 10 inches it is 0.375 inch thick. Standard is a term frequently but unfortunately used to indicate a regular or common product.

Standard Pressure.—A term applied to valves and fittings good for a working steam pressure of 125 pounds per square inch.

Stand Pipe.—In hot water heating, an upright pipe having its top connected to the expansion tank to afford room for expansion. A vertical pipe arrangement, often of great size, at pumping stations into which water is pumped.

Stay.—In the pipe trade, stay tube or upset tube. A bolt from tube sheet to tube sheet. This is also called a longitudinal or through stay. In boilers there are many different kinds of stays used, at times, and their special names amply describe them, as crown, diagonal, radial, girder gusset sling, cross, bolt, etc. See Tube Sheet Stay.

Stay Tube.—A boiler tube, stouter than the others, which is threaded at each end and screwed through both tube plates to brace them together. The ends are either beaded over, or else secured with locknuts. The threads are usually plus and minus; that is, the thread at the front is larger than the outside diameter of the tube, while that at back is the same diameter as the tube. Upset tubes are often used as stays.

Steam Couplings.—The word steam, when used in such phrase, means that the coupling is threaded to suit standard pipe.

Steamer's Measurement.—The cubic space obtained from the greatest width, length and height; used in determining ocean freight which is based on 56 pounds—one cubic foot, or 40 cubic feet—one ton (2240 pounds).

Stiefel Process.—A parallel process to Mannesmann or a modification thereof. The product is seamless tubes or pipe.

Stove.—Stoved—upset.

Straight Way.—A term applied to valves to signify that the fluid passes through without deviation. Such valves offer the least resistance to flow and permit the passage of such tools as "go-devils." Full bore, straight flow, full way, full area are

terms that at times have been proposed to signify the same thing.

Street Elbow.—Service Ell.

Strum.—A strainer, or the like, to prevent the entrance of solid matter into a pump chamber or suction pipe.

Sub Nipple.—Substitute nipple, that is, a short piece of pipe having different styles of thread on its ends.

Sucker Rod.—In bored or drilled wells, the jointed pump rod, which carries the bucket at its lower end, and is actuated by the walking beam at its upper.

Swaged.—Reduced in diameter by use of blacksmith's swages or swedges, hence the name. This is a hammering process, but the same result may be attained by press forging or spinning.

Swaged Nipple.—A nipple that has one end smaller than the other; a reducing nipple.

Sweated.—A term used synonymously with tinned; that is, coated with soft solder or tin. It is usual in making sweated joints on pipe to sweat both the pipe and the fitting or socket separately, before sweating them assembled.

Sweep.—A term used to convey the idea that the curvature is not abrupt; *i. e.*, that the flow may take place easily and without the formation of eddies.

Swelled; Enlarged.—Swelled-end tubes usually have their ends enlarged for a short distance. See also Inserted Joint.

Swing Joint.—One made like a cock, except with only one outlet in the body, and another outlet from the plug at right angle to axis of plug.

Switch Valve.—A device for conducting exhaust steam into the smokestack or atmosphere. The three-way cock.

Swivel.—In oil-well drilling, a short piece of casing having one end belled over a heavy ring, then a large hole through both walls, the other end being threaded. Any device that prevents longitudinal motion but allows axial rotation. See Water Swivel.

Swivel Joint.—One that rotates about an axis without decreasing its efficiency as a joint.

Symbols.—See Abbreviations.

T.

Tail Pipe.—The suction pipe of a pump. It communicates with the pump stock through a clack or check valve, and in the case of metal pumps is in two parts, the upper one of which has a screw thread at its lower end, by which it is secured to the lower part, the latter being cut to a suitable length.

Tank.—Often applied to a cylinder having closed ends (poor usage).

Tap.—A tool used for cutting internal threads. Small sizes are usually made solid, but larger sizes are often made with inserted cutters, so that they can be withdrawn from the work, without stopping, when the desired threads are cut. See Master and Plug Tap.

Tapped.—The operation of making an internal thread by means of taps. Often used loosely, to mean chased or threaded. In the pipe trade it means threaded regardless of method of production.

Tapping Machine.—A machine for cutting and tapping a small hole in a pipe (as a street main), that is either empty or carrying pressure. Two classes of tapping machines are made, designated as "pressure" and "dry" tapping machines. They are sometimes called drilling machines.

Tee.—A fitting, either cast or wrought, that has one side outlet at right angles to the run. A single outlet branch pipe. See Branch, Bull Head, Cross-Over, Double Sweep, Drop, Four-Way, Reducing Service, Side Outlet and Union Tee.

Telegraph Cock or Faucet.—A self-closing cock, the lever of which resembles the key of a telegraph instrument. When the water enters the cocks horizontally they are called horizontal

telegraph cocks; when it enters vertically they are called vertical telegraph cocks.

Telescoped.—When one pipe is slid inside of another, it is said to be telescoped. When the term telescoped is applied to pipe it means that two pipes have been separately made, and then telescoped, and then welded together so as to form one pipe. This is usually done so perfectly that it is difficult to see the weld, except by special or destructive treatment. Nested (poor usage).

Temper Screw.—Part of a drilling rig used to regulate the force of blow of the drill bit.

Templet.—A gage ring for thread. A drilling jig for holes in flanges.

Thimble.—See Boiler Thimble.

Thimble Joint.—A sleeve joint packed to allow longitudinal expansion. A slip expansion.

Threads.—See Ammonia Cock, Briggs', Common, Gas, Pipe, Sellers, Signal, V, Vanishing, Whitworth and Wine Bore Threads.

Three-Way Elbow.—A double-branch elbow (poor usage).

Tin-Lined Pipe.—A wrought pipe lined with block tin. The lining of lead pipe was introduced by Anderson in 1804.

Tongs.—See Chain Tongs, Pipe Grip, Pipe Tongs and Pipe Wrench.

Tong Tight.—An expression used to indicate that coupling, flange or joint has been tightened by tongs, frequently in a threading machine.

Tongue and Groove.—Usually applied to flange connections by forming a tongue on one flange and a groove on the other flange. Usually placed about midway between bolts and inside diameter of pipe. The gasket is placed in the groove. The male dimensions should be equal to the depth of the groove. The depth of the groove should equal the thickness of the gasket plus $\frac{1}{16}$ inch.

Trailing Water.—The operation of drawing water a long distance through pipes, by means of suction. As long as the total height lifted, plus the friction in the pipe, does not exceed a head of 25 to 26 feet, water can be trailed a very great distance. The only difficulty is possible leakage at the pipe joints, which impairs the vacuum.

Tube.—In America, means a boiler tube whose outside diameter is its nominal size. In England, tubes mean tubular goods, whether tubes, pipe or casing. In a steam boiler, the pipes, tubes or flues employed for conducting the products of combustion from the fire box to the chimney, taking heat from them during their passage and transfering it to the water in the boiler. The tubes are fitted into holes in the tube sheet at each end of the boiler, being expanded or beaded therein, or occasionally fastened with a copper or iron ferrule. The tubes of water-tube boilers usually extend between headers, legs or drums, into which they are secured as into tube sheets, but the tubes may be made with closed ends, and circulation secured by special devices. In water-tube boilers, the water is inside the tubes and the hot gases outside. See Annealed End, Beaded, Boiler, Brick Arch, Cross, Expanded End, Field, Hot, Ribbed and Stay Tubes.

Tube Cleaner.—A stiff wire brush or metallic scraper attached to the end of a rod and used to remove soot or scale from boiler tubes. A steam jet may serve for tubes through which the furnace gases pass. Some cleaners for removing hard scale from the interior of tubes are highly ingenious pieces of mechanism.

Tube Expander.—A tool for expanding boiler tubes within the tube sheet, causing them to hold firmly. A center piece is fitted with cylindrical rollers, and inserted within the tube end. A long taper pin is placed between the rollers rotated; as it revolves, it turns the rollers around and forces the material of the tube into a tiny ridge on each side of the plate, thus gripping it and preventing leaks.

Tube Ferrule.—A ring of hard wood, used for holding condenser tubes to their plates. The ferrule fits between the outside of the tube and the hole in the plate, and being swelled by the action of the water, renders the tubes water-tight.

Tube Packing.—A bag of flaxseed, or ring of rubber made to occupy the space between the tube of an oil well and the bored hole, to prevent access of water to the oil bearing stratum.

Tube Plug.—A tube stopper, to be used in case of leak of a boiler tube. It usually consists of a double wooden plug with a smaller central part. The plug is forced into the tube until the small part is opposite the leak; the plug is then in equilibrium and will not blow out, while the wood rapidly expands and fills the tube. This device is rarely used, a special stopper being more frequently applied in cases of emergency, or the tubes are cut off altogether, when conditions permit, by means of a disc on either tube plate, held together by a through stay.

Tube Scaler.—A tool for removing scale and other incrustation from the inside of steam boilers. See Tube Cleaner.

Tube Scraper.—A tool for removing scale and other incrustation from the inside of steam boilers.

Tube Sheet.—One of the sheets of a boiler, condenser, etc., which is drilled with holes for the reception and support of the tubes. Each sheet is defined according to its position; as, firebox tube sheet, middle condenser tube sheet, etc.

Tube Sheet Cutter.—A trepanning tool having a spindle guided by a central hole, while a cranked tool cuts out a disc, corresponding to the hole required for the reception of a boiler tube.

Tube Sheet Stay.—A rod extending through a boiler from tube sheet to tube sheet, and having heads or nuts on the exterior of the sheets. It ties the tube sheets together so as to prevent disruption by steam pressure. Another form of stay is riveted to the shell and to the tube sheet. See also Stay, Stay Tube and Upset.

Tubing.—A special grade of high-test pipe fitted with threads and couplings of special design. Tubing is made to the same outside diameters as standard pipe. It is similar to what is known in Europe as hydraulic pressure pipe.

Tubing Catcher.—A device to prevent tubing from slipping back into an oil well when it is being pulled.

Tuyere.—Tuyere pipe is the name applied to pipe of special quality. It is used in making tuyere coolers, cinder monkeys, etc. It is only made in small sizes. The name of the nozzle used where a blast of air is forced into a furnace of fire such as that used by blacksmiths.

U.

Under Reamer.—An oil-well tool used for enlarging the hole below a drive shoe, etc.

Union.—The usual trade term for a device used to connect pipes. It commonly consists of three pieces which are, first, the thread end fitted with exterior and interior threads, second, the bottom end fitted with interior threads and a small exterior shoulder, and third, the ring which has an inside flange at one end while the other end has an inside thread like that on the exterior of the thread end. In use, a gasket is placed between the thread and bottom ends which are drawn together by the ring. Unions are very extensively used because they permit connecting with little disturbance of the pipe positions. The Kewanee union is made with the thread end of brass, and the thread and bottom ends are ground together so that no gasket is required. The act of joining or uniting two or more things. The joint or connection thereby made. Rarely used in this sense in the pipe trade. There are many types of unions. See Boyle, Flange, Kewanee, Lip, Pipe and Ring Union.

Union Coupling.—A term sometimes applied to a right- and left-handed turn buckle, or sleeve nut, whereby two parts might be connected and drawn together without turning anything but the coupling.

Union Ell.—An ell with a male or female union at connection on one end of run.

Upset.—The product of any cold or hot forming of material in which the metal is thickened by being forced back into itself. It is usually done at a red heat by hammering or press forging. Upset tubes are those whose ends have their walls so thickened for a short distance, usually to such extent that the threading leaves as great thickness of metal below roots of threads as in main body of tubes. Upset tubes are much used as stay tubes; they are sometimes called stoved tubes.

V.

Valve.—A device used for regulating or stopping flow in a pipe, etc. The form that allows an opening the full inside diameter of the pipe is usually known as a gate valve or straight-way valve. The same result is obtained in some forms of cocks. The essential difference between a valve and a cock is that the closure of the latter is invariably accomplished by rotating a taper plug, which was ports or holes in it that correspond to holes in the body. See Angle, Angle Gate, Back Pressure, Bracket, Butterfly, By-Pass, Check, Cross, Exhaust Relief, Expansion, Fullway, Gate, Globe, Needle, Non-Return, Pop, Radiator, Receiver Filling, Reducing, Reflux, Screw Down, Straight Way, Switch, Wedge Gate and Wheel Valve.

Valve Box.—A pipe placed over a buried valve to allow access to the valve stem or wheel for opening or closing. The top of the pipe is usually closed by a plate or cap to exclude dirt that would interfere with operation. There are many designs, the most usual being adjustable within limited range, to suit the depth planted, and are called extension valve boxes, street boxes or service boxes.

Valve Seat.—A flat or conical fixed surface on which a valve rests, or against which it presses.

Valve Stem.—A rod attached to a valve by which the latter is moved; it is also called a valve spindle.

Vanishing Thread.—A pipe so threaded that the reaming or counter sinking of the coupling is at the same angle as the lead of the dies that thread the pipe. The pipe is so threaded that the taper comes into contact at same time as the threads tighten. The term "vanishing" comes from the peculiar bore of coupling.

Van Stone Joint.—A flanged joint, in which the pipe itself is flanged out over the face of the bolting ring.

V Thread.—A screw thread formed by means of a sharp pointed tool, as contrasted with a square thread. A standard thread for pipes, tubing, etc., with an angle of 60° between the sides. See Briggs' standard.

V Welding.—In boiler making, a mode of welding the plates of boiler flues in which there is neither butt nor lap properly so called, but in which a strip of square rod is inserted angle ways between the nearly abutting edges of the plate, so that it unites the edges upon two sides of the rod.

W.

Walker Joint.—One form of flexible joint that is made with spherical mating surfaces, and which permits a few degrees flexure in any direction.

Water Arch.—In a steam boiler, a chamber of plates or of pipes within a furnace, replacing the ordinary fire brick bridge, or arch, or the deflecting arch over the fire door of externally fired boilers. The same as water table. A locomotive fire box arch, suspended by tubes, which adds to the heating surface and promotes circulation.

Water Bar.—A tube serving as a fire bar in a water grate.

Water Column.—A special fitting connected to a boiler above and below the water-line. To it are usually connected the water gage and gage cocks.

Water Flush.—A system of well boring, in which percussive drills are used in connection with water forced down to the

bottom of the hole through the drill rods. This water jet makes the tools cut better, and washes the detritus by out of the hole. Its great objections are, the great probability of water-logging the surrounding territory, and the pressure of water forcing back bodies of oil, which have only a small force behind them, thus leading to the passing by of possible valuable oil-bearing territory.

Water Gage.—A glass pipe connected to a boiler above and below water-line so as to see the water level.

Water Hammer.—The shock or blow struck by water whose flow in a pipe is suddenly arrested; *e. g.*, sudden closure of a faucet often causes shocks that so shake the pipes that a clanking noise is produced. The term is more used in connection with steam piping, where the condensed steam (water) is forced ahead by the steam rushing into a cold empty pipe with such high velocity that it slams the water against bends, elbows, valves, etc., with terrific force or shock. It is peculiarly violent when steam is admitted suddenly to a cold vacuous pipe, because there is no air to cushion the blow; but even air will not ordinarily eliminate its destructive and dangerous violence. The main remedies are easy bends and slow closure of the valve for liquids, and for vapors (steam, etc.), slow admission until all pipes are brought to temperature.

Water Packer.—A device intended to cut off water from the lower levels of an oil well, or to separate two distinct flows of oil from different strata; more especially in fountaining wells. It consists essentially of two tubes sliding within one another, the inner tube being swathed with rubber rings or with canvas and rope yarn, for some length between its own upper socket and the socket on top of the larger tube. The whole is lowered into the well, on the tubing, until the perforated anchor pipe, connected with the outer tube, rests on the bottom. The whole weight of the string of tubing then rests upon the inner tube of the packer, compressing the packing outward against the casing

of the well, so that the upper strata are cut off from communication with the lower.

Water Pipe Clamps.—A term used to indicate service clamps.

Water Plug.—It means stand pipe or penstock, or hydrant. Water plug is the more general colloquial term used in railroads.

Water Swivel.—In well boring, a combined universal joint and hose coupling, forming the connection between the water supply pipe coupling, forming the connection between the water supply pipe and the drill rods, and permitting complete rotation of the tools.

Water-Tube Boiler.—A steam boiler in which the boiler tubes contain water. Used in contradistinction to the older type of boiler, in which the tubes were used as flues and surrounded by water.

Wedge Gate Valve.—A gate valve having inclined seats; usually a wedge-shaped disc is pressed down between these inclined seats.

Weight.—A term that by trade custom has come to be frequently attached to various tubular products. It has grown out of the need in the trade for several thicknesses of the same outside diameter and the practice of determining the thickness by the average weight per foot. See Card and Full Weight.

Weld.—See Butt, Circular, Lap, Safe End, Scarf and V Weld.

Welded Flange Joint.—A joint made by flanges attached to pipe by welding; for this it is necessary that material of flange be capable of being welded (*e. g.*, soft steel or wrought iron). The best known style is made by slipping the end of pipe through the flange ring forgings, and then bringing all to a welding heat and hammering or pressing together. Another style uses a collar on the flange; the collar is attached to flange by a circular or safe end weld.

Wheel Valve.—A stop or grate valve opened by means of a hand wheel and screw, as distinguished from those patterns of gate valves in which the valves are opened or closed quickly by means of levers, or the many types of butterfly and other throttle valves.

Whitworth Thread.—The standard thread for screws, employed in England and her colonies, and on the European Continent. The angle of the thread is 55°, one-sixth being rounded off at top and bottom.

Widemouth Socket.—A well borer's fishing tool, in which the socket is fitted with a bell mouth, nearly the full bore of the casing, thus making it easy to grip the ends of broken poles or the like, when lost at the bottom of a well.

Wine Bore.—A term used to indicate standard pipe thread (rare and poor usage).

Wiped Joint.—A lead joint in which the molten solder is poured upon the desired place, after scraping the fitting parts together, and the joint is wiped up by hand with a moleskin or cloth pad while the metal is in plastic condition; it makes a neat and reliable connection in the pipe.

Working Barrel.—The body of pump used in oil wells.

Wye; Y.—A fitting either cast or wrought that has one side outlet at any angle other than 90°. Usually set 45°, and always so set unless angle is specified. It is usually indicated by letter "Y."

Y.

Y; Wye.—Which See.

Y Base.—The same as a crotch or back outlet return bend, except that the horns are parallel.

Y Bend.—Y; Wye.

Y Branch.—A Wye. Sometimes used to designate a fitting whose shape is nearly like that of a single sweep tee.

Yoke.—In a rising stem valve, the portion of the bonnet that supports the nut, hand wheel, etc. A pipe with two branches; as, for hot and cold water, uniting them to form one stream.

HAZARDS IN HANDLING GASOLINE.

The following are extracts from a paper recently issued by the Department of the Interior, Bureau of Mines, dealing with the hazards attendant on the handling of certain petroleum products, particularly naphtha and gasoline:

Many fires originate from the cleaning of silks with gasoline, the violent rubbing of the silk generating static electricity, which produces a spark that ignites the vapor.

Many jobbing tailors cause fires by using gasoline in an open vessel and smoking a cigarette or cigar at the same time.

A dangerous practice, common in many garages, is the cleaning of automobile parts with gasoline from an open can. Employees find it easy to clean grease and oil from the motor and other parts with gasoline from an open can using a brush saturated with gasoline, and the gasoline is readily ignited by a spark. Such a spark may be caused by striking two pieces of metal together, by the ignition system on the automobile when the starting crank is turned, and in other ways. In one instance, a nut that stuck was struck with a wrench, causing a spark. The car was instantly enveloped in flame.

Detailed Precautions Concerning the Handling of Gasoline.

In establishments where benzine, gasoline, naphtha and other liquids are used, care should be taken to see that the smallest practicable quantities are used, and that the liquids are handled in an approved manner.

No open light or flame of any kind, nor any machine or belt capable of producing a spark, should be allowed in the room where the gasoline is being used. All shafting and machines with belt that are liable to cause a static electric spark should be well grounded.

Only incandescent electric lights should be used, and these should be provided with guards to prevent their being smashed.

All electric switches, fuses, etc., should be outside the room.

Danger signs should be posted on all doors opening into the room, warning against the carrying of open lights of any kind inside.

When large quantities of the inflammable liquids mentioned are used, the main supply should be stored in a metal tank, buried under ground and a safe distance from buildings. The working supply should be pumped into the buildings as needed and the system so arranged that when the pump is stopped all liquid in the pipes will flow back into the supply tank. When it is not possible to use a pump and a buried tank, the main supply should be stored outside and well away from other buildings, under lock and key. Only small quantities of working supplies should be taken into the building, closed metal cans, preferably safety cans, being used as containers.

When the use of an open pan is necessary, the opening should be as small as possible and a cover should be provided. The cover should be put on whenever the pan is not in use.

Signs should be posted prohibiting an open flame near the place of storage or near a pump or other handling apparatus. The signs should explain the danger involved and give instruction for safe methods of operation.

Empty gasoline barrels should be stored with bungholes down, in safe places in the open air.

Rooms in which explosives or dangerous gases or vapors are used or generated should be safely inclosed, and should be provided with an improved system of ventilation.

Gasoline vapor is heavier than air, and a suction fan should be used to insure proper ventilation.

Joints in tanks, pipes, conveyers, etc., used for storage of explosives, liquids, gases or vapors should be kept tight.

Before work is done on vessels, pipes, conveyers, etc., used for storage of explosives, sufficient time should be given to allow gas to escape.

Special care should be exercised before work requiring the use of heat or flame is done. Apparatus that has contained explosive gas should be filled with water or steam to force out the gas.

Don't spill gasoline.

Don't fill the tank of the liquid-fuel stove full (the contents may expand). Don't use a liquid-fuel stove that leaks.

Don't use a gasoline stove in a closed room. Have plenty of ventilation to carry the vapor out of the room.

The following somewhat technical explanation of gasoline explosions, quoted from this government report, is worthy of careful reading:

At ordinary temperatures air will hold about 5 to 28 per cent of gasoline vapor. As gasoline is about three times as heavy as air, in a room containing mixture of the vapor with air, the vapor is found in largest proportions near the floor.

The limits of explosibility of mixtures of gasoline vapor and air are between about 1.4 and 6 per cent of gasoline vapor, although dangerous flashes may be produced with mixtures containing less and more than these proportions. In other words there is needed only a small proportion of gasoline vapor to render air explosive—1.4 cubic feet of the vapor to 97.5 cubic feet of air. One gallon of gasoline can, under ideal conditions, render 2100 cubic feet of air explosive.

A dangerous feature of gasoline vapor is that it may travel a considerable distance from the gasoline and there be ignited, the flash traveling back to the container of the liquid and causing a roaring fire in a few seconds.

CHAPTER VI.

INSTRUCTIONS FOR BLACKSMITHS.

METALS.

The metals generally worked in forges are wrought iron, machine or mild steel, and tool steel. Rough distinctions between the above materials would be about as follows: Wrought iron has stringy streaks of slag running lengthwise of the bar, which gives it a decided fiber or grain similar to wood; machine steel, called "low-carbon," mild, or soft, may be chemically almost the same as wrought iron, but will stand more hammering at a low temperature, is about 20 per cent stronger, and when broken shows a crystalline or silky grain; wrought iron and machine steel contain from .05 per cent to .5 per cent carbon, and tool steel from .8 per cent to 1.5 per cent carbon.

Tool steel is peculiar in the fact that if heated to a red heat and suddenly cooled in water or oil, it becomes very hard. This property makes it particularly valuable for tools, because by varying the heat treatment it may be given almost any degree of hardness. Wrought iron and machine steel may be converted into tool steel by adding carbon, which fact is demonstrated in case-hardening, of which an explanation in detail will be given later.

THE FIRE.

One of the most important things in all forge work is to have a good fire; many failures, particularly in steel work, are caused not so much by fault of material, as commonly supposed, as by poor heating in a poor fire. On small work, the fire should be built in the form of a bowl or cone 6 inches to 8 inches in diameter. The coal should always be broken up

as fine as possible, and thoroughly dampened; and when a fresh supply is needed, the green coal should be placed around the sides of the fire, never on top. This prevents the fire from spreading; and at the same time the damp coal is turned into coke, which may in turn be worked into the center of the fire to replace that which has been consumed. Coke should be saved to make a bottom in the fire when starting it. In building a fire for larger work, the forge should be thoroughly cleaned out and all ashes and cinders blown out of the air pipe and tuyère. Place a wooden block, the size to be governed by the size of the work to be done, with end on the tuyère, and pack the damp coal firmly around this block up to about the height intended for the fire. The block is then withdrawn without disturbing the banked coal. Cover the tuyère with a few lumps of clean, hard coke, then put in waste and chips or fine wood sufficient to start the fire; when this is well ablaze, put on fine coke and start blast. Fires may be banked and kept for some time by placing a block of wood in the center of the fire and covering it well with green, damp coal. One fact must always be remembered, that the fire will always follow the blast; if coal is packed on top of the fire, the blast is forced out at the sides, and the fire consequently spreads; while, if the coal be packed around the sides, and the center of the fire kept loose, the blast is forced upward and the fire is kept small and compact.

OIL-BURNING BLACKSMITH FORGES.

Oil-burning blacksmith forges are so constructed that any temperature, from a black heat to a welding heat, can be obtained and kept constant as long as required.

Instead of the bituminous coal used for making or building the heating chamber in the coal-fired forge, fire bricks are used throughout, and so placed as to form the heating chamber. The different heating chambers are formed on top of the forge

with loose bricks to any desired shape or length. The heating chambers of fuel-oil forges do not require building so frequently as a coal forge. The fuel-oil forge is so arranged as to accommodate miscellaneous work, such as is done on the usual coal forge, for working and welding iron and steel shapes. It has a steel plate casing, $\frac{1}{4}$ inch thick, riveted together with corner angles, including sides and bottom, with angle stiffeners around the top, and insulated with $\frac{1}{4}$-inch asbestos mill-board between the brick and outer casing. It is lined with fire brick throughout. The combustion and heating chambers are so designed, proportioned and vented, that practically perfect combustion of fuel is affected, and so that the heating mouth may be entirely closed without affecting the operation of the burner. It has a slag box arranged so that it may be cleaned when the forge is in operation. It has a cast-steel heater to utilize the spent gases to heat air and oil before passing through the burners. It has one oil burner sealed tightly in the combustion chamber, of a capacity to maintain welding heats. This burner is supplied with fuel oil, by pipe connection, from a tank usually about 100 gallons capacity; the tank has an air-pipe connection at the top, and a pressure of from 10 to 35 pounds of air is carried on top of the oil.

There is a direct air connection to the burners with $\frac{1}{2}$-inch pipe, having a pressure of about 100 pounds per square inch. at the controlling valve, to supply the necessary air required in the process of combustion. Both air and oil pipes have controlling valves.

In starting up the burner or forge, always start with giving the burner a little air, then apply the light, preferably a piece of lighted waste, and see that there is sufficient flame to ignite the oil, then give burner a little oil, sufficient to make a good flame. After a few minutes more air can be turned on, then gradually give more air and oil, until the desired heat is obtained. To stop or shut off the burner always turn off the

oil first, and see that the oil valve is closed, and then shut off the air.

The air and oil supply should be so regulated that a clear gas flame will be made in the heating chamber.

The production of a heavy flame or black smoke should always be avoided, as this shows that too much oil is being used in proportion to the air, and indicates incomplete combustion; the remedy is to either decrease the supply of oil or increase the supply of air, according to the size of the work and the degree of heat required, until a proper gas flame is obtained.

A high welding or forging heat cannot be made with a heavy or smoky flame.

THE TOOLS.

The following are the tools commonly used on small work: Hot chisels, for cutting hot metal; cold chisels, for cold metal; and the hardy, which is inserted in the hardy-hole in the anvil, on which metal may be cut by placing it on the hardy and striking the work, instead of the tool, as in the case of the chisels. The hot chisel is made thinner and with more taper than the cold chisel. Both are tempered when first put in use, and if proper care is exercised, such as dipping in water often, while using, the hot chisel may retain its temper for some time; but if allowed to remain too long in contact with the hot work, the temper will soon be drawn. Care must be used not to attempt to cut cold work with the hot chisel. The hand hammer is usually a ball-peen hammer weighing about 1½ pounds; the sledges are cross- and straight-peen, weight about 12 pounds. Variously shaped tools, sometimes classed under the general head of "set hammers," assist in the shaping of the work on the anvil. For smoothing and flattening work, the flatter and set hammer are used. The set hammer is also used to work up sharp shoulders and corners. Flatters for general work have a face about 2 inches to 3 inches square, and the set hammer

a face from 1 inch to 1½ inches square. Fullers have a blunt-rounded face, and are made in various sizes, one to fit in hardy-hole of anvil and one with handle. A fuller, the curve on the face of which has a radius of ¼ inch, would be called a ½-inch fuller; in other words, the face would be the same shape as the outside of half a round bar ½ inch in diameter. Fullers are used for rounding out fillets, working in round grooves, and for spreading work in any desired direction. When used for spreading work, the tool is held at right angles to the direction in which it is desired to have the metal go; the fuller acts as a wedge in this operation.

Swages are made just opposite to a fuller, having semi-circular grooves across the faces to fit the various sizes of round work. Swages are also made to fit other shapes, such as the "V" or hexagon. Swages are used for rounding up work or drawing down to small sizes.

Various other tools are used for special work of different kinds, such as half-round chisels, round and square punches and drifts, etc., of various sizes.

FORGING.

Simple Operations.

Drawing Out.—When a piece of metal is worked out, either by hammering or otherwise, in such a way that the length is increased, and either the width or thickness reduced, the operation is called "drawing out." A few precautions should be taken when drawing out stock, principally to prevent splitting. Particular care must be taken with round stock; work should be drawn out square in section to near the required size, after which it should be hammered to an octagon, and last of all finished round with swages. When the reduction in size required is slight, round swages may be used for the whole operation. Drawing out may be somewhat hastened by forging on the horn of the anvil, which acts as a blunt

wedge, drawing the stock out lengthwise; while if the hammering be done flat on the anvil, a large part of the work is expended in spreading the metal sidewise, where it must be again worked back into shape. Pointing should be done in the same general way; that is, by first working the stock for the point down square, and rounding it up after forging to approximate size.

Upsetting.—When a piece of metal is worked in such a way that its length is shortened, and either its thickness or width or both are increased, the operation is called "upsetting." When short bars are to be upset, the piece is simply stood on one end on the anvil, and blows delivered straight down on the other. Longer pieces or bars are easily upset by swinging them back and forth, ramming the end against the side of the anvil. Very heavy work is sometimes laid on the anvil in a horizontal position, and the blows delivered against the end; in this case, the other end may be backed up by a heavy sledge or weight to offer more resistance to the blow. The amount and location of the upsetting is governed somewhat by the heating; the hottest part of the metal should, of course, be where the greatest upsetting is desired. The quality of the blow, however, has some influence on the kind of work being done; the effect of a heavy blow is to upset the work for some distance, while the light quick blow upsets the metal nearer the end. When it is desired to upset a very short place in the bar, the metal should be cooled off in water on each side of the heated part just before striking or ramming.

Punching.—In punching, the hole is started with the work lying flat on the anvil, by driving the punch about two-thirds of the way through; then turn the work and punch from the other side, with the hole directly over the hole in the tail of the anvil. If the work is an inch or more thick, after the punch is started the hole should be filled with powdered coal, which keeps the punch from sticking. The punch should

not be left in contact with the hot metal for any length of time, for the end will become heated and upset if driven while in this condition, making it almost impossible to withdraw it from the hole. The punch should be constantly dipped in water while using.

SHRINKING.

When metal is heated it will expand, and when cooled, it contracts or returns to practically its original size.

This convenient property is always utilized in the process of shrinking.

If it is required to shrink a collar or band on a shaft, the hole in the collar is made slightly smaller than the diameter of the shaft. The collar is then heated, which causes the metal to expand, and increases the diameter of the hole, permitting it to slip over the shaft, and when the collar is in the right position, it should be cooled off as quickly as possible, by pouring water over it, or dipping it if the work is small enough.

Unless the collar is cooled quickly, it will heat the shaft, which will also expand, stretching the collar some, and, as both would cool and contract together, the collar would probably be loose on the shaft.

This method is always used for shrinking tires on wagon wheels, the tire being made just large enough to slip on while hot, but not large enough to go on cold.

MAKING CHAIN.

Chains are usually made by chainmakers who do nothing else, and it is regarded as a separate trade from other forge work. Any blacksmith may have occasion, however, to either make or repair chain, and should know something of this class of work.

The approximate proportions for making the links are given below; and while they may vary some, especially for the

larger sizes, in which the links are made a trifle shorter, these proportions will be found suitable for all practical purposes:

Length of link *outside* to be five times diameter of stock.

Length of link *inside* to be three times diameter of stock.

Width of link *outside* to be $3\frac{1}{4}$ times diameter of stock.

Width of link *inside* to be $1\frac{1}{4}$ times diameter of stock.

"Stock" meaning the material of which the chain is made.

As one link of each piece of chain to be joined, must be placed in the connecting link before it is welded, it is best to get the connecting link as near to the proper shape as possible, having the ends scarfed, so that nothing remains to be done except to weld after the other links are inserted.

When the connecting link is bent to shape and scarfed, it should be heated all over and twisted at the other end, so that the scarfed end will open, leaving the sides parallel as in the case of opening a lap link, until the end links of the pieces to be joined will enter. The ends are then twisted back till the scarfs touch, and the link is ready for welding.

The fact that the link to be welded is already hot, and the others cold, is a distinct advantage, because it will come to a welding heat, when placed in the fire, before the rest of the chain is affected.

In repairing old chain or chains which are badly worn, the material used should be of the same size as the original; a link made of larger size will have the force of a wedge, and put a breaking strain on the old links.

The best material for chain is Swedish or Lowmoor iron, because it does not contain so much silicon, sulphur or other impurities, as the more common brands of wrought iron.

The best grades of wrought iron have a tensile strength of about 60,000 pounds to the square inch, while mild steel of about 0.15 per cent carbon, has a tensile strength nearly double this. The ductility and toughness of wrought iron, however, which is greater than that of any grade of steel,

makes it a much better material for chains, hooks, rings, etc., which are to be subjected to heavy jerking strains or loads; because it will give a warning, by stretching or bending, before it breaks. Besides this, as wrought iron welds easier, a sound weld is more likely to be obtained than if steel is used.

CHAIN CABLE.

(Navy Department Specifications 6C6a—April 2, 1917.)

Material.—Material to be in accordance with the latest issue of Navy Department specifications for "Grade A" wrought iron for blacksmiths' use.

Manufacture.—Chain may be either hand forged and hand welded, or machine or die made, the bidder to state distinctly the method of manufacture he proposes to employ. Chain shall be stamped every 6 feet with the words "hand made" or "machine made," according to whichever method is employed.

Arrangement of Shots.—The links, swivels, etc., in the shots shall be arranged in accordance with sketches and tables appended to and forming a part of these specifications. No chain appendages, such as shackles, swivels, swivel shackles, etc., shall be furnished unless specifically called for: *Provided, however,* That the swivel in the out-board shot shall be furnished when out-board shots are specifically called for, and that shackles and swivel shall be furnished when complete cables are called for.

Workmanship and Finish.—Finished cable shall be of good workmanship and smooth finish with welds in the ends of all links, all welded ends turned the same way. Material must be full to size, and in all stud chain studs must be well centered and firmly held in place. By "size" is meant the nominal diameter of wire (Figs. 109 or 110). When inspected it shall be free from paint or any other coating which would tend to conceal defects.

Doublet Tests.—One doublet from each shot shall be tested for both proof and breaking stress as given in the attached tables, with Figs. 109 and 110. If the doublet fails under either stress, the doublets each side of it in the shot shall be cut out and given the same stresses; and if either of these doublets fail, the shot may be rejected.

Studs.—(a) Studs shall be in accordance with the sketch and table appended hereto, Fig. 111, and shall be drop-forged of common steel in accordance with the latest issue of Navy Department specifications for "steel shapes and bars for hull construction, including material for drop and miscellaneous forgings."

(b) Studs differing slightly from this plan may be used, but must be described by sketches accompanying bids. Cast-iron studs will not be accepted.

(c) If desired by the contractors, arrangements may be made for studs to be supplied by the government for insertion in the links by the contractors. If such arrangement is desired, it shall be so stated in bid, and bid price will not include cost of studs, which will be supplied by the government. Transportation charges for studs from the navy yard, Boston, to contractor's works are to be borne by the contractor. Payment will be based upon the finished weight of the chain less the weight of the studs.

Annealing.—If necessary, to make the chain meet the test requirements, it shall be given proper heat treatment; and the method of heat treatment to be used shall be submitted to the Bureau of Construction and Repair before the work is undertaken.

Proof Stress Tests; Tolerances from Dimensions.—Each shot shall be subjected to proof stress as given in the tables (with Figs. 109 and 110). After the proof stress no link shall show surface rupture or deformation; and no shot shall be accepted which, after proof stress, shows twist or in which a link broke

under proof stress. Each link of the chain shall then be inspected for outside length. No minus tolerance from the designed length shall be permitted. A plus tolerance shall be permitted of not more than $\frac{3}{16}$ inch for each inch of nominal diameter of wire: *Provided,* That for diameters of 1 inch and less the maximum tolerance shall be $\frac{3}{16}$ inch. In addition, the over-all length of 6 links shall be checked, measuring from every third link, the shot to be subjected to a moderate stress while these measurements are being made; no minus tolerance from the designed length of the 6 links as are given in the tables, with Figs. 109 and 110, shall be permitted. A plus tolerance of not more than $\frac{1}{2}$ inch for each inch diameter of wire shall be permitted: *Provided,* That for diameters of 1 inch and less the maximum tolerance shall be $\frac{1}{2}$ inch. In the case of a close-link chain the width of the link shall also be checked, a plus tolerance being allowed of $\frac{3}{16}$ inch for each inch nominal diameter of wire: *Provided,* That for diameters of 1 inch and less the maximum tolerance shall be $\frac{3}{16}$ inch.

MEMORANDUM FROM BUREAU OF CONSTRUCTION AND REPAIR.

(Not a part of these specifications.)

All outboard shots (5 fathoms long) of navy standard chain cables manufactured at Boston ($2\frac{1}{4}$ inches up) are $\frac{1}{8}$ inch larger than other shots to permit of extra wear, hence windlasses should be so placed that the outboard shot, when the anchor is housed, should never come on wild-cats of windlass, as wild-cats are for chains $\frac{1}{8}$ inch smaller.

BOAT CHAINS.

(Navy Department Specifications 6C3b—September 1, 1917.)

Quality.—Boat chains shall be commercial chain of the best quality, smooth finished; all parts shall be made of iron or of basic open-hearth mild steel of good welding quality; and all

parts shall be thoroughly, evenly and smoothly galvanized by the hot process.

Purpose.—Boat chains are intended for use with anchors of small boats.

Size.—The chains shall be made in three sizes, as required—$\frac{1}{4}$ inch, $\frac{5}{16}$ inch and $\frac{3}{8}$ inch. The chains shall be known by these sizes, which refer to the diameter of the iron or steel in the common links.

Construction.—Boat chains shall consist of common links, two enlarged links, one pear link, and a bending shackle, assembled as shown in the plans; chains complete shall have a reaching length of 30 fathoms for $\frac{1}{4}$-inch chain and $\frac{5}{16}$-inch chain, and 30 or 40 fathoms, as may be specified, for $\frac{3}{8}$-inch chain. All parts shall be of the shape, size and proportions shown on the plans incorporated in and forming part of these specifications.

(a) *Common Link.*—The common links shall be of uniform size, of the shape and proportions shown on the plans, and shall be made from iron or steel accurate to the size specified.

(b) *Enlarged Link.*—The enlarged links shall be of the shape and proportions shown on the plans and shall be made from iron or steel $\frac{1}{16}$ inch larger in diameter than that of the common links.

(c) *Pear Link.*—The pear link shall be of the shape and proportions shown on the plans, and shall be made from iron or steel of the size shown.

(d) *Bending Shackle.*—The bending shackle shall be smoothly and accurately forged to the shape and proportions shown on the plans.

Inspection and Test. (a) *Inspection and Test.*—All chains shall be inspected for surface defects, before galvanizing. The lifting test and the breaking test shall be made at the place of manufacture, after galvanizing, in the presence of an inspector.

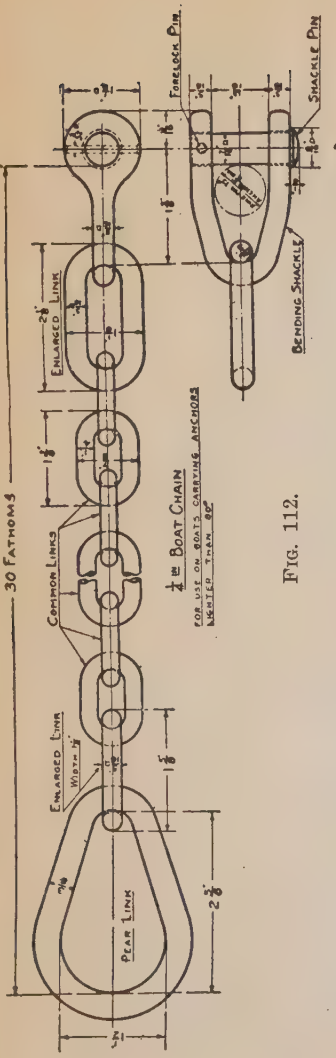

FIG. 112.

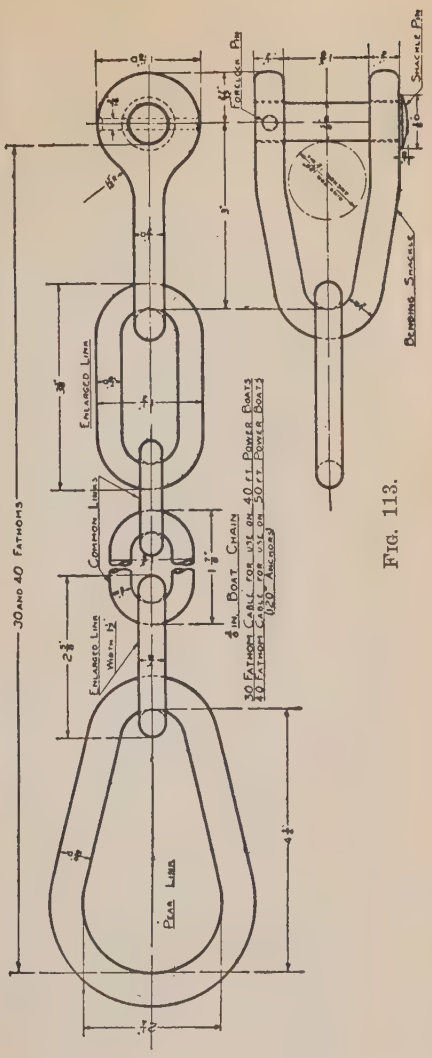

FIG. 113.

(b) *Lifting Test.*—Each chain shall be proved by lifting a dead weight. This proof load shall be for $\frac{1}{4}$-inch boat chain, 1600 pounds; for $\frac{5}{16}$-inch boat chain, 2400 pounds; and for $\frac{3}{8}$-inch boat chain shall be 3600 pounds. The breaking of a link under the proof load shall involve the rejection of the entire length of chain. After being proved, each link shall be inspected and must show no skin rupture or deformation; links showing skin rupture or deformation shall be replaced, and the length of chain shall then be retested.

(c) *Breaking Test.*—From each lot of three boat chains of each size there shall be cut and tested to destruction at least one piece of 5 inches selected by the inspector. The minimum breaking load for $\frac{1}{4}$-inch chain shall be 4000 pounds; for $\frac{5}{16}$-inch chain, 6000 pounds; and for $\frac{3}{8}$-inch chain, 9000 pounds. Failure to stand this test shall involve the rejection of the lot. All chains cut for testing, as above, shall be made good and proved as specified at the expense of the contractor.

DIP ROPES.

(Navy Department Specifications 6R1b—August 1, 1917.)

Material.—The shackles and pin (Nos. 1, 2 and 3, in plan) shall be of medium steel of a tensile strength of not less than 60,000 pounds per square inch. The distance piece (No. 5) shall be of wrought-iron pipe. The split cotter (No. 6) shall be of rolled brass. The thimble (No. 7) shall be of best commercial steel. The dip rope (No. 8) shall be of grade A manila, in accordance with latest issue of Navy Department specifications for manila rope.

Construction.—Dip ropes shall be made in a neat workmanlike manner, and shall be in accordance with the plans and table of dimensions incorporated in and forming part of these specifications. All steel parts shall be uniformly galvanized by the hot process.

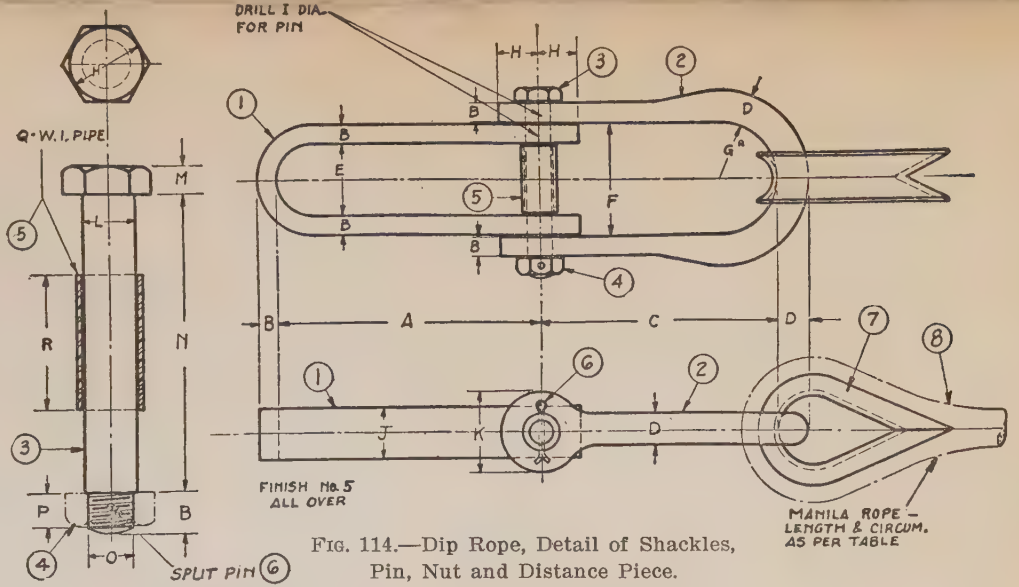

FIG. 114.—Dip Rope, Detail of Shackles, Pin, Nut and Distance Piece.

Table 94.—Dip Shackles and Rope: Proportional Dimensions in Inches.

Cable Size.	A	B	C	D	E	F	G	H	I	J	K	L	M	N	O	P	Q	R	Circ. of rope In.	Length of rope Fms.
3/4–1 1/8	4 5/8	3/8	4 1/8	1/2	1 1/4	2 1/16	1	11/16	1/2	7/8	1 3/8	7/16	1/4	2 13/16	3/8	5/16	3/8	1 3/16	2 1/2	14
1 1/4–1 1/2	6 1/4	7/16	5 1/2	11/16	1 5/8	2 9/16	1 9/32	15/16	5/8	1 1/8	1 7/8	9/16	3/8	3 7/16	1/2	3/8	1/2	1 9/16	3 1/4	14
1 5/8–1 7/8	7 3/4	9/16	6 7/8	7/8	2	3 3/16	1 13/32	1 1/8	13/16	1 7/16	2 5/16	3/4	7/16	4 5/16	5/8	1/2	3/4	1 15/16	4	24
2 –2 1/4	9 1/4	11/16	8 1/4	1 1/16	2 7/16	3 7/8	1 15/16	1 3/8	15/16	1 3/4	2 3/4	7/8	1/2	5 1/4	3/4	5/8	1	2 5/16	4 3/4	30
2 1/2–2 3/4	11 3/8	7/8	10 1/8	1 1/4	2 15/16	4 3/4	2 3/8	1 11/16	1 1/16	2 1/8	3 3/8	1	5/8	6 1/2	15/16	3/4	1	2 13/16	6	36
3 –3 1/4	13 1/2	1	12	1 1/2	3 1/2	5 9/16	2 25/32	2	1 3/8	2 1/2	4	1 1/4	3/4	7 9/16	1 1/8	7/8	1 1/4	3 3/8	7	36
3 1/2–3 3/4	15 1/2	1 1/8	13 7/8	1 3/4	4 1/16	6 3/8	3 3/16	2 5/16	1 9/16	2 7/8	4 5/8	1 7/16	7/8	8 5/8	1 5/16	1	1 1/2	3 15/16	8	36
4 –4 1/4	17 5/8	1 5/16	15 5/8	1 15/16	4 9/16	7 1/4	3 5/8	2 5/8	1 3/4	3 1/4	5 1/4	1 5/8	1	9 7/8	1 1/2	1 1/8	2	4 7/16	9	36

CLEAR HAWSE PENDANTS.

(For anchor chains up to 3 inches diameter.)

(Navy Department Specifications 6P1—April 10, 1910.)

The *clear hawse pendant* is to consist of a slip or pelican hook, a chain, and a wire-rope tail assembled as shown. The size by which the pendant is to be known is the diameter of the iron in the bower chain with which it is designed to be used.

The *slip hook* is to be of the shape and proportions shown. The bill and shank must be parallel when secured and the distance between them must be one and one-sixteenth times the diameter of iron in the chain with which the pendant is to be used. The end of the bill must be so shaped that there will be no tendency for the slip link to slide over it when the hook is secured and under strain, and at the same time allow the slip link to be readily knocked over the point to disengage the bill. When the hook is secured the slip link will be held in position by a pin through the end of the bill and this pin will be attached to the shank by a suitable length of cut-brass chain.

The *chain* is to be 6 fathoms long, open link, end welded, the diameter of wire to be one-half that of the bower chain with which the pendant is to be used, but never to exceed $1\frac{1}{4}$ inches. The inner end of the chain is to be fitted with a shackle having a round pin riveted in place and a solid galvanized cast-steel thimble of the shape and proportion shown, suitable for taking the wire-rope tail. The dimensions of the chain, shackle and wire-rope thimble are never to exceed those for $2\frac{1}{2}$-inch pendant.

The *wire rope tail* is to be of a length to suit the ship on which the pendant is to be used. The minimum length generally required is 30 fathoms, but this length may be reduced for small vessels. The tail is to be of galvanized steel-wire rope, Boston Navy Yard type AA, of a circumference equal to twice the diameter of iron in the bower cable with which the pendant is to be used, but never to exceed 5 inches, it being understood that when this specification would require a circumference in even eighths of an inch, wire rope of a circumference in even quarters of an inch next larger is to be used. The tail must be securely spliced to the thimble of the pendant,

the splice to be wormed, parceled and served before splicing and the splice served with wire, according to the most approved practice with wire rope.

The *material* of the slip hook, chain and shackle must be homogeneous wrought iron, having the following characteristics: Tensile strength not less than 49,000 and not more than 53,000 pounds per square inch, elastic limit about 60 per cent of the ultimate strength, elongation of at least 30 per cent in a length of 8 inches and reduction of area of at least 40 per cent. It must stand being bent cold through an angle of 180° about an inner diameter of $\frac{1}{2}$ inch and being bent at a red heat through an angle of 180° until sides are in contact, without showing any signs of fracture. Specimens nicked and broken cold by slow bending must show a fibrous structure. All physical tests must be made upon specimens of the full size required for the chain. It must contain not more than ten hundredths and not less than three hundredths of 1 per cent of carbon, not more than ten hundredths and not less than four hundredths of 1 per cent of phosphorus, and the sum of the carbon and phosphorus content must not exceed fifteen hundreds of 1 per cent. It must contain not more than one hundredth of 1 per cent of sulphur and not more than ten hundredths of 1 per cent of either silicon or manganese.

The pendant assembled complete must be proved to the load given below and must be carefully inspected after proving for signs of failure.

Table 95.

Size of pendant.	Proof load.	Size of pendant.	Proof load.
In.	*Pounds.*	*In.*	*Pounds.*
1	6,720	$1\frac{3}{16}$	23,520
$1\frac{1}{16}$	8,392	$1\frac{1}{8}$	23,520
$1\frac{1}{8}$	8,392	$1\frac{3}{16}$	26,880
$1\frac{3}{16}$	10,360	2	26,880
$1\frac{1}{4}$	10,360	$2\frac{1}{16}$	30,240
$1\frac{5}{16}$	12,595	$2\frac{1}{8}$	30,240
$1\frac{3}{8}$	12,595	$2\frac{3}{16}$	33,880
$1\frac{7}{16}$	15,120	$2\frac{1}{4}$	33,880
$1\frac{1}{2}$	15,120	$2\frac{5}{16}$	37,856
$1\frac{9}{16}$	17,696	$2\frac{3}{8}$	37,856
$1\frac{5}{8}$	17,696	$2\frac{7}{16}$	42,000
$1\frac{11}{16}$	20,440	$2\frac{1}{2}$	42,000
$1\frac{3}{4}$	20,440		

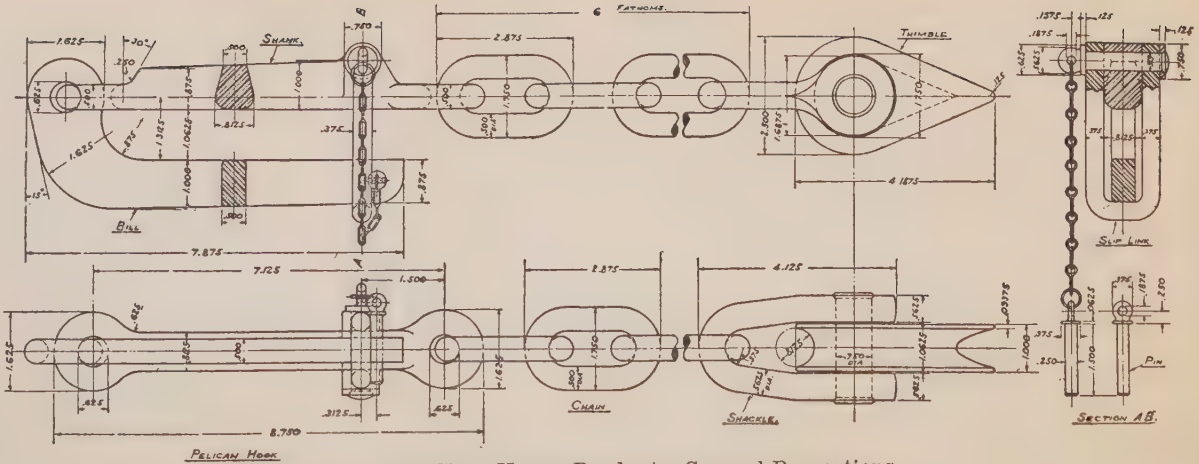

FIG. 115.—Clear Hawse Pendant. General Proportions.

NOTE.—The pendant is to be known by the diameter of iron in the bower chain with which it is to be used and all dimensions are given in terms of this diameter.

In actual work take the dimension in sixteenths of an inch nearest to the figure obtained by use of the multiplier, it being understood that when this figure is in thirty seconds of an inch the dimension in sixteenths next larger is to be used. The dimensions of pendant chain, shackle and wire rope thimble are never to exceed those for 2½-inch pendant.

CHAIN HOOKS.

(Navy Department Specifications 6H1a—January 10, 1913.)

To be made of best quality medium steel, conforming to the requirements of the latest edition of specifications for steel rods

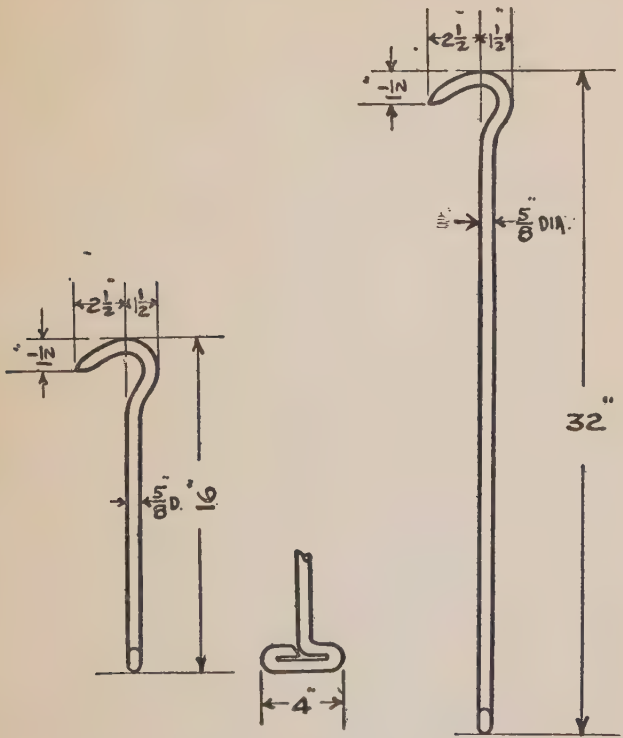

FIG. 116.—Chain Hooks.

and bars for rivets, bolts, nuts, stanchions, etc., issued by the Navy Department. Hooks to be manufactured in two sizes, 32 and 16 inches, respectively. Diameter to be $\frac{5}{8}$ inch for both sizes.

These hooks to conform as closely as possible to dimensions given in Fig. 116, incorporated in and forming a part of these specifications.

Hooks not to be galvanized.

CALCULATING THE LENGTH OF STOCK FOR BENT SHAPES.

When a piece of wrought iron or steel is bent, a line of the same curvature through the exact center of the stock, remains the same length as when the stock was straight. A line along the inner side of the curve of the stock is shorter, because the metal has been compressed or squeezed together on this side, while a measurement around the outer curve will be greater than when the stock was straight, because the metal has stretched on this side.

To obtain the length of stock for bent shapes, the measurement should always be taken along the center of the template, pattern or old piece to be duplicated, as the case may be. This method of calculating the length of stock is practically the same in all cases, no matter how many bends, or of what curvature or angles they may be, provided, of course, that the width is uniform throughout the entire length.

For example, a ring is to be made of 2-inch stock, 6-inch inside diameter, the outside diameter of this ring would be 10 inches, and the diameter of this ring at center of stock would be 8 inches, which is the diameter from which calculation is made to find the length of material required, as follows: The circumference of a circle is equal to the diameter $\times$ 3.1416, therefore $8'' \times 3.1416 = 25.1328$ inches, which is the exact length the stock would be in the finished ring. An allowance, however, must always be made for welding, but the exact amount cannot be given accurately, as this depends on how carefully the iron is heated and how many heats are taken to make the weld. The only stock lost or wasted in welding, and for which allowance should be made, is the amount burned off or lost in scale while heating.

In preparing the welding joints, the ends are upset, of course, which shortens the piece, and it is still further shortened by overlapping the ends in making the weld, but this material is all hammered back in shaping the forging, so that the only actual loss, as stated above, is from scale and burning. An exact rule cannot be given for this allowance, but from one-fourth to three-fourths the thickness of the stock, will be found approximately safe allowance for waste, in making rings or chain links of medium and small stock.

When making straight welds, there need be no particular limit to the allowance for welding, where the extra stock can be trimmed from the end of the finished piece.

A blacksmith should take accurate measurements before and after each weld he makes, until he learns by experience exactly how much stock he requires to allow for welding.

Where bends and angles are irregular, which would involve complicated calculations, a good way to measure for stock, is to make a full-size sketch of the work on a board or bench, and on this lay a string or flexible wire along the center of the drawing throughout its entire length, the string or wire is then straightened and its full length will be the amount of stock required; this method may be applied in the same way to templates or a duplicate of the forging required, being careful to lay the string or wire along the center of the stock.

Another method of measuring from the drawing or from a duplicate forging, is to use a measuring wheel, which is a light wheel mounted in a handled fork, usually with a circumference of 24 inches, having one side of the rim graduated in inches by eighths. The wheel is placed with the zero mark at the point from which the measurement is to begin, and rolled along the surface, following the line to be measured, with sufficient pressure to make it revolve without slipping; by counting the revolutions made, and marking the wheel where it stops at the end of the line, the wheel is then rolled over a

straight line the same number of revolutions and such part of a revolution as is shown by the mark on the wheel, which will give the length of the stock required.

WELDING.

If a piece of wrought iron or machine steel be heated to a high temperature and the temperature gradually raised, the metal will become softer and softer until a temperature is reached at which the metal is so soft that, if another piece heated in the same way be brought in contact with it, the two will stick together. This heat is known as the welding heat, and if the metal be heated beyond this it will burn.

Not all metals can be welded (in the sense in which the term is here used). Some when heated retain almost their initial hardness until a certain heat is reached, when they will crumble and drop to pieces; cast iron, for instance, acts in this way, and therefore cannot be welded. Only those metals which, as the temperature is increased, gradually become softer, passing slowly from the solid to the liquid state, can be easily welded. Metals of this kind become very soft and pasty just before melting or burning, and are easily welded in that state. The greater the range of temperature through which the metal remains pasty, the easier it is to weld.

Taking the Welding Heat.—Great care must be used, when welding, to heat properly, particularly to prevent dirt of any kind from sticking to the surfaces to be joined, thus getting it between the two pieces and making a faulty weld. The heating must be done slowly enough to insure heating evenly all the way through the bar. If the heating be done too rapidly, the outside of the metal may be burned before the inside is near the welding heat. Wrought iron or machine steel, when properly heated for welding, will feel sticky when brought in contact with other pieces at the same temperature.

As a rough indication of the state of a welding heat, the fire is watched, and when bright sparks appear in the blaze,

the iron or steel is supposed to be about properly heated. These bright sparks are quite different from those ordinarily seen in the fire and may be easily distinguished. They are very white, and explode, forming little white stars; they are little particles of iron which have been melted off the bar and blown upward by the blast, burning with a bright star-like spark when coming in contact with the air.

If iron or steel should become overheated and be burned, no attempt should be made to use it, as it is absolutely useless.

To take the welding heat, the fire should be cleaned out, and clear coked coal, not gaseous coal, should be used. The main points in a welding heat are: To heat the iron equally all through; to obtain a proper degree of heat; and to keep the surfaces that are to come in contact as free from oxidation, and at the same time as clean, as possible. To accomplish these ends, the iron must not be heated too quickly after it has reached a good red heat; and the fire must be so made that the blast cannot meet the metal, at any point, till it has passed through the bed of the fire. At this point the flux may be sprinkled on the work; but do not remove it from the fire for that purpose, as that would cause it to oxidize or scale very rapidly.

Fluxes.—Iron heated under ordinary conditions has formed on its surface a thin film of oxide or scale, which is continually dropping from heated iron, and is always formed when heated iron is brought in contact with air. This scale melts at a very high temperature, and if present between two pieces of metal will prevent a sound weld. The metal must be heated to a high enough temperature, when taking a welding heat, to melt this scale, which may then be squeezed from between the two pieces by the blows of the hammer. It is, of course, always an advantage, and sometimes a necessity, to work the metal at as low a heat as possible; and in order to do this the scale must be melted at a lower temperature, which is accomplished by using a "flux."

If a flux be sprinkled on the heated iron, it will combine with the scale and cause it to melt at a lower temperature. The fluxes in common use are sand and borax. The piece to be welded is heated to about a good yellow, the flux sprinkled on, and the heating continued. The iron may be welded at a slightly lower heat than when no flux is used. The flux not only melts the scale already formed at a lower temperature, but melts and flows over the weld, which protects the metal from the air, and prevents further oxidation.

Working the Weld.—When the work is taken from the fire, it should meet the anvil with a blow, the scarfed face being downwards, to jar off any dirt, cinder, etc.; and if the work is large, the face of the scarf should be cleaned with a stroke or two of a wire brush; but as every instant the iron is in the air it is both cooling and oxidizing, these operations should be performed as quickly as possible. The two scarfs being laid together, the first blows must be delivered lightly, so as not to cause the upper piece to move, and as quickly as possible, the force of the blows being increased regularly and gradually until the weld is sufficiently firm to hold together, when it may be turned on edge, and the edges of the scarf hammered to close and weld the seam. If this turning is done too soon, however, it may cause the two halves to separate. When the weld is firmly and completely made, the enlarged diameter due to scarfing may be forged down to the desired size, working the iron as thoroughly as possible.

There are a number of shapes into which welding points are made, such as "scarf," "butt," "tongue," "lap," "V," etc.; precautions to be taken are the same, however, in all cases, the principal one being to have the joining surfaces touch first at the points most remote from the possibility of hammering, as these points should come in contact first, when the metal is at a temperature that will cause the pieces to stick without the force of blows. For instance, a scarf weld should be pre-

pared by forging the faces of the scarf convexed or rounding, so they will touch first about the center, the edges being stuck by hammering; the "tongue" of "V" weld should be made to touch in the throat of bottom first.

SHAPES OF WELDING POINTS AS SHOWN IN PLATE ON OPPOSITE PAGE.

Plain Lap Weld.—This is the simplest and most generally used form of shaping the points of iron or steel for welding, and is employed on small and medium size plain straight work, such as round, square or flat stock.

Jump Weld.—This weld is generally used when a piece of medium or heavy stock is to be jumped or welded, end on, to a plane surface of another piece, at right angles to it.

Butt Weld.—This form is sometimes used in welding shafting of medium and heavy stock. This weld is usually made without removing the work from the fire, by holding against one end and striking or ramming the other when the welding heat arrives. As a precaution to assure true alignment of the two pieces, a small hole is drilled or punched in the center of each of the welding ends, in which a dowel is placed.

V Weld.—Is generally used on long and heavy work, such as shafting or similar lengthy stock, where the parts are too heavy or cumbersome to be heated separately and handled quickly. The two pieces are sometimes held together with clamps and bolts and weld made with the joint in the fire, by ramming on the end. This form is also sometimes used on smaller shafting and for welding on pieces at various angles.

Split Weld.—Is a form employed for welding thin pieces, and particularly thin pieces of spring steel, which are too light to be joined with the ordinary lap weld. The ends are tapered on the flat sides and split down the center about a half inch or more, according to the thickness of the stock; one side of each split end is bent up and the other down in opposite direc-

tions, so that when the ends are pushed tightly together they will interlock forming a double scarf lap. The ends are then

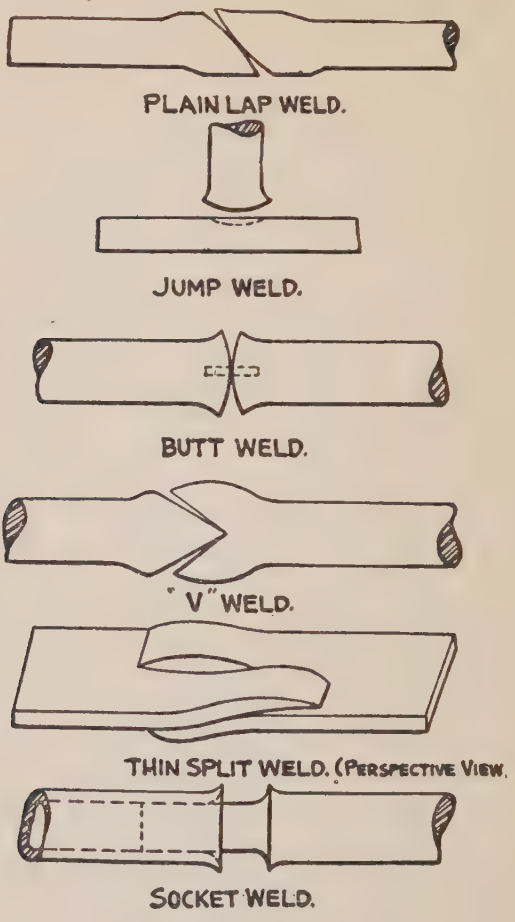

FIG. 117.

driven so the two pieces will hold together while heat is being taken and the weld made.

Socket Weld.—Is used when a rod or stanchion is to be welded into a piece of pipe. The end of the rod is tapered slightly, leaving a shoulder to suit the outside diameter of the pipe. The rod end should be a tight fit in the pipe leaving about one-third to drive, the extreme end of the pipe should be slightly belled to fit the fillet on shoulder of rod. Get a welding heat on the rod before heating the pipe, drive the pipe on the rod while in the fire, when a welding heat shows on the pipe complete the operation by forging in a "V" block or bottom swage, rapid, sharp blows should be employed.

ANNEALING, HARDENING AND TEMPERING METALS.

Annealing.

In order that steel may be soft enough to file or work easily in a machine, it is annealed. This refers particularly to tool steel, but sometimes machine or mild steel will become hard from cooling off too quickly. Annealing consists of heating the steel red hot and allowing it to cool off slowly. The methods commonly used in annealing are, to heat the steel to a cherry-red, allowing it to become hot slowly, and bury it in warm, dry ashes or lime, there to remain till cold; the ashes or lime should by no means be damp or cold, as that would have the contrary effect on the metal; that is, it would chill it, which would make it hard instead of soft, which is the purpose of annealing. All tool steel forged for making taps, and other tools, should be annealed before attempting to work in the machine.

Copper and alloys or compositions containing copper, such as brass, bronze, gun metal, etc., are annealed by heating to a dull red and plunging suddenly into water while hot, leaving them in the water till they cool off; this, it will be noted, is the opposite effect which this treatment has on steel.

Case-Hardening.

Case-hardening is a method for hardening the surfaces of wrought iron, machine steel and such grades of iron or steel as are so low in carbon that heating and dipping suddenly in water does not have any effect on the temper. The simple method for a thin hardened surface is, to heat the piece red hot (bright cherry), then apply cyanide of potassium, or yellow prussiate of potash, to the surface, after which the piece is to be heated again to a cherry red; when the piece is reheated after applying the potash, it must be dipped in cold water to harden the surface. If it is necessary to harden rather deep, the heating and applying potash, repeated many times, will give the desired effect; it is not necessary, however, to dip in water for hardening. until after the last course of heating and potash is applied. There are other methods of case-hardening, such as packing the iron in an iron box filled with carbonaceous material, such as granulated raw bone, animal hoofs, etc., and placing the whole in a slow furnace, and allowing it to heat to a cherry red, remaining at this temperature from 6 to 20 hours, according to the depth of hardness desired. The pieces are then taken from the box and, while red hot, plunged into cold water; this hardens the surface. The operation reduces the strength of iron about 10 per cent.

There is no process known which will harden copper or brass except by hammering or rolling cold; and this does not harden them sufficiently to be used for cutting tools.

Copper or brass becomes harder and springy when hammered cold, and in working these metals cold, they should be annealed occasionally to prevent breaking or splitting.

Tempering.

Tempering is a process by which tool steel is hardened to any degree desired, when made into tools for cutting other metals or wood. The different degrees of hardness are determined ordinarily by colors through which the surfaces of the steel pass in that part of the process known as "drawing the

temper." The steel is first forged into the desired shape of the tool, after which the end on which the cutting point or edge is made is heated to a cherry red and the extreme point dipped in cold water, immediately after which it should be rubbed bright with a piece of brick or emery covered strip of wood. This point, when first taken from the water, will be very hard. It is then the colors should be watched for; and when the point runs the desired color, dip suddenly and cool off entirely. These colors are caused by the remaining heat in the tool extending into the point just dipped, which softens it. The colors run successively as follows, the first being hardest and the last softest: When first taken from the water and rubbed bright, the first color is German silver, blending next into dark gray, then light straw, dark straw, light copper, dark copper, light purple, dark purple, light blue and dark blue; and finally it returns to the original color, as before being heated and dipped; but as stated before, when the desired color appears, the tool should be dipped and cooled off entirely.

The following tools used ordinarily aboard ship should be drawn to the following colors:

Cold-chisels, for cutting mild steel	Blue.
Drills, flat	Very dark straw.
Drills, twist	Same as flat.
Taps	Straw, not too dark.
Wood-cutting tools	Dark straw.
Scrapers, for scraping ships' bottoms	Dark straw.
Hammers, hand	Very dark straw.
Punches, drift	Blue.
Punches, center	Very dark straw.
Tools, lathe	Dark straw.
Springs, flat	Heat to dark cherry-red, cool in oil and draw down to blue three times.
Springs, spiral	Heat to dark cherry-red, cool in oil, then cover in oil and burn oil off.

In heating springs, be careful to have an even heat, and heat very slowly.

PRECAUTIONS WHEN USING PORTABLE FORGE; CARE OF TOOLS, ETC.

When it is necessary to build a fire in the forge on deck, first obtain permission from the officer of the deck, or from the executive officer, before doing so. The blacksmith should have a large tarpaulin to spread on the deck, on which to place his forge and anvil, so as not to litter up the deck with ashes and coal; and much care should be taken not to allow hot pieces of metal, when being cut off, to lie on the deck and burn little holes.

The blacksmith should keep the necessary tools for shackling and unshackling chains, such as a sledge, hand hammer and punches, in a convenient place at all times. All blacksmith tools should be kept in first-class condition and ready for use at any time, in order to be prepared for emergencies.

BLACKSMITH'S TONGS.

(Navy Department Specifications 41T17—December 1, 1917.)

Quality.—To be made of medium steel suitable for the purpose; to be of good workmanship and free from all defects which may affect the appearance, serviceability or operation of the tongs.

Construction.—To be straight-lip tongs, fluted straight-lip tongs, curved-lip, fluted-jaw tongs or rivet tongs, as required, in accordance with plan incorporated in and forming a part of these specifications. The two halves of the tongs to be held together by means of a double-headed pin or rivet which shall permit the tongs to be easily operated. The handles to be smooth and of such shape and size as to be easily operated by hand.

FIG. 118.—Straight-Lip Tong.

FIG. 119.—Fluted Straight Lip Tong.

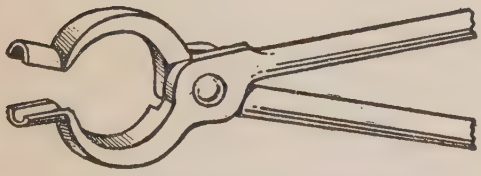

FIG. 120.—Fluted-Jaw, Curved-Lip Tong.

FIG. 121.—Rivet Tong.

Blacksmiths' Straight-Lip Tongs.—Blacksmiths' straight-lip tongs shall approximately conform to Table 96.

Table 96.

Size, overall length.	Width of jaw.	Thickness of each lip.	Distance between rivet center and end of lip.	Diameter of handles.	Weight.
In.	*In.*	*In.*	*In.*	*In.*	*Pounds.*
18	$\frac{7}{8}$	$\frac{3}{8}$	$3\frac{1}{2}$	$\frac{1}{2}$	$2\frac{5}{8}$
24	1	$\frac{3}{8}$	$3\frac{1}{2}$	$\frac{1}{2}$	$3\frac{1}{4}$
30	1	$\frac{3}{8}$	$3\frac{1}{2}$	$\frac{1}{2}$	$4\frac{1}{8}$

Blacksmiths' Fluted Straight-Lip Tongs.—Blacksmiths' fluted straight-lip tongs shall approximately conform to Table 97.

Table 97.

Size, overall length.	Outside width of jaw.	Inside diameter jaw.	Distance between rivet center and end of lip.	Diameter of handles.	Weight.
In.	*In.*	*In.*	*In.*	*In.*	*Pounds.*
18	$\frac{3}{4}$	$\frac{1}{2}$	4	$\frac{1}{2}$	$2\frac{1}{2}$
24	1	$\frac{1}{2}$	4	$\frac{1}{2}$	3

Blacksmiths' Fluted-Jaw, Curved-Lip Tongs.—Blacksmiths' fluted-jaw curved-lip tongs shall approximately conform to Table 98.

Table 98.

Size, overall length.	Inside diameter of jaw.	Outside diameter of jaw.	Inside diameter of lip.	Outside diameter of lip.	Diameter of handles.	Distance between rivet center and end of jaw.	Weight.
In.	*In.*	*In.*	*In.*	*In.*	*In.*	*In.*	*Pounds.*
18	$\frac{1}{4}$	$\frac{9}{16}$	$1\frac{1}{2}$	$2\frac{1}{4}$	$\frac{1}{2}$	$3\frac{1}{2}$	$2\frac{3}{4}$
24	$\frac{5}{16}$	1	$1\frac{5}{8}$	$2\frac{3}{8}$	$\frac{1}{2}$	$3\frac{3}{4}$	$3\frac{1}{4}$
30	$\frac{7}{16}$	$1\frac{1}{8}$	$1\frac{3}{4}$	$2\frac{3}{8}$	$\frac{1}{2}$	4	4

Blacksmiths' Rivet Tongs.—Blacksmiths' rivet tongs shall approximately conform to Table 99.

Table 99.

Size, overall length.	Inside diameter of jaw.	Outside diameter of jaw	Distance between rivet center and end of jaw.	Diameter of handles.	Weight.
In.	*In.*	*In.*	*In.*	*In.*	*Pounds.*
18	$\frac{3}{4}$	$1\frac{1}{8}$	4–6	$\frac{1}{2}$	$2\frac{1}{2}$

QUESTIONS FOR BLACKSMITHS.

Q. Name the tools required by blacksmiths on vessels of the Navy.

A. Anvil; bench vise; calipers, inside and outside; blacksmith's hot and cold chisels; hardies; dividers; round, square and flat bastard files; flatters, $2\frac{1}{2}$-inch and 3-inch; set of fullers, top and bottom; hand hammers, 2- and 3-pound; set of punches, handled; set hammer; sledge hammers, 5- and 8-pound; center punch; steel square; swages, complete set; top and bottom, $\frac{3}{8}$-inch to $1\frac{1}{2}$-inch; tongs; complete set for miscellaneous work; set of heading tools; portable forge; 2-foot rule.

Q. Describe the following tools and their uses: Hot chisel; cold chisel; hardy; flatters; set hammers; fullers; and swages.

A. A hot chisel is a thin, keen, handled chisel, for cutting hot metal; a cold chisel is a handled chisel, thicker and heavier near the point than the hot chisel, used for cutting cold metal; a hardy is a chisel held in place in the hardy-hole of the anvil, on which work may be cut by placing it on the hardy and striking the work instead of the tool, as in the case of the chisel; flatters, set hammers, fullers and swages are usually classed under the general head of "set hammers," and are used in the shaping of work on the anvil; flatters for general work have a face from 2 inches to 3 inches square, and the set hammer a face from 1 inch to $1\frac{1}{2}$ inches square, these tools are used for

smoothing and flattening work. Fullers have a blunt, rounded nose or face, one to fit in the hardy-hole and one with a handle, this tool is used for rounding out fillets, working in round grooves, and for spreading work. Swages are made just opposite to fullers, having semi-circular grooves across the faces to fit the various sizes of round work, swages are also made to fit other shapes, such as " V " or hexagon; this tool is used for rounding up work or drawing down to small sizes.

Q. Name the principle metals which are generally worked in forges.

A. Wrought iron; machine or mild steel and tool steel.

Q. Describe the rough distinctions between these metals as found in forging and hardening.

A. Wrought iron has stringy streaks of slag running lengthwise of the bar, which gives it a decided fiber or grain similar to wood; machine steel, called " low-carbon," mild or soft, may be chemically almost the same as wrought iron, but will stand more hammering at a low temperature, is about 20 per cent stronger, and when broken shows a crystalline or silky grain, wrought iron and machine steel contain from .05 per cent to .5 per cent carbon, and tool steel from .8 per cent to 1.5 per cent carbon.

Tool steel is peculiar in the fact that if heated to a red heat and suddenly cooled in water or oil, it becomes very hard. This property makes it particularly valuable for tools, because by varying the heat treatment it may be given almost any degree of hardness. Wrought iron and machine steel may be converted into tool steel by adding carbon, which fact is demonstrated in case-hardening, of which an explanation in detail will be given later.

Wrought iron welds easily and is easily hammered into shape while hot, it can be worked to some extent cold, but owing to the presence of slag seams in the fiber, it is more liable to split when being so worked. It may be heated and

worked at a slightly higher temperature than machine steel, but will not stand as much hammering at a lower temperature. It cannot be hardened to any extent except by the process of case-hardening, which is only done to prevent wearing on surfaces where there is considerable friction. Wrought iron is easier to weld than mild steel or tool steel.

Mild steel welds easily and is easily hammered into shape while hot; it can be worked to some extent cold. The same conditions as to hardening apply to this metal as to wrought iron. Mild steel is especially good for forging and is stronger than wrought iron.

Tool steel is not so easily welded as wrought iron or mild steel. The proper heat for welding steel is about a bright yellow, this can only be determined, however, by experiment in each case, according to the amount of carbon in the steel.

If it is heated till sparks fly from it, and hammered at this temperature, it will crumble and fall to pieces. When welding it to mild steel or wrought iron, the tool steel should be at a lower heat, while the other metal should be heated to its regular welding heat.

The best flux for welding tool steel is about one of sal-ammoniac to four of borax.

High-carbon tool steel, such as files and lathe tools are made of, can rarely be welded to itself; although it may have the appearance of a good weld, when an effort is made to temper it, it will be likely to crack at the weld.

Spring steel and steels of lower carbon are easier to weld, but even with these, much care must be exercised to prevent melting or crumbling.

Q. Describe the proper way to built a fire in an ordinary blacksmith's forge with soft coal.

A. Place a wooden block, the size to be governed by the size of the work to be done, with end on the tuyère; pack the damp coal firmly around this block up to about the height

intended for the fire. The block is then withdrawn without disturbing the banked coal, cover the tuyère with a small lump of clean, hard coke, then put in waste or chips sufficient to start the fire, adding fine coke and coal as needed.

Q. What is meant by drawing out?

A. When a piece of metal is worked out, either by hammering or otherwise, in such a way that the length is increased and the width or thickness reduced, the operation is called "drawing out."

Q. What is meant by upsetting?

A. When a piece of metal is worked in such a way that its length is shortened, and either its thickness or width or both are increased, the operation is called "upsetting." When short bars are to be upset, the piece is simply stood on one end on the anvil, and blows delivered straight on the other. Longer pieces or bars are easily upset by swinging them back and forth, ramming the end against the side of the anvil. Very heavy work is sometimes laid on the anvil in a horizontal position, and the blows delivered against the end; in this case, the other end may be backed up by a heavy sledge or weight to offer more resistance to the blow. The amount and location of the upsetting is governed somewhat by the heating; the hottest part of the metal should, of course, be where the greatest unsetting is desired. The quality of the blow, however, has some influence on the kind of work being done; the effect of a heavy blow is to upset the work for some distance, while the light, quick blow upsets the metal nearer the end. When it is desired to upset a very short place in the bar, the metal should be cooled off in water, on each side of the heated side just before striking or ramming.

Q. Describe the operation of punching.

A. In punching, the hole is started with the work lying flat on the anvil, by driving the punch about two-thirds of the way through; then turn the work over and punch from the

other side, with the hole directly over the hole in the tail of the anvil. If the work is an inch or more thick, after the punch is started, the hole should be filled with powdered coal, which keeps the punch from sticking.

The punch should not be left in contact with the hot metal for any length of time, for the end will become heated and upset if driven while in this condition, making it almost impossible to withdraw it from the hole. The punch should be constantly dipped in water while using.

Q. What is meant by welding two pieces of iron or steel?

A. If two pieces of the above metals be heated to a sufficiently high temperature, they will become soft enough to stick if put together and hammered lightly, this temperature is known as the welding heat. The grain and fiber of the two pieces will assimilate, and if the weld is properly made, the pieces will be as firm and solid at the weld as at any other part of the metal.

Q. Name the metals in common use aboard ship that can be welded; which can be forged and not welded, and which cannot be forged or welded.

A. Wrought iron, machine or mild tool steel and tool steel can be welded: Copper, tobin bronze, cold-rolled brass rivet rod and Muntz metal can be forged, but not welded. Cast brass and cast iron can be neither forged nor welded.

Q. Describe the appearance of the blaze and particles thrown out in the flame, which indicate the proper state of a welding heat.

A. The blaze is a bluish white, and very bright sparks are thrown out which explode and form little bright stars that sparkle, these are little particles of iron which have been melted off the bar, and blown upward by the blast, burning with a bright starlike spark when coming into contact with the air.

Q. What metals or alloys, if heated in a fire, renders it useless for welding in thereafter?

A. All non-ferrous metals, such as copper, and all alloys and compositions containing copper, such as brass, bronze, bell metal, gun metal, etc.; lead and zinc, and all compositions containing these metals, such as Babbitt, solder, etc., and galvanized iron.

Q. What are the principal precautions to be taken in preparing welding points?

A. To forge the welding points into such shape that the joining surfaces will touch first at the points most remote from the possibility of hammering; because these points should come in contact first, when the metal is at a temperature that will cause the pieces to stick without the force of blows. For instance a scarf weld should be prepared by forging the faces of the scarf convexed or rounding, so they will touch first about the center, the edges being stuck by hammering. The tongue of a "V" weld should be made to touch in the throat or bottom first; see sketch, page 672.

A thin film of oxide or scale always forms on the surface when heated iron or steel comes in contact with the air. This scale is in a melted condition when the iron is at the welding heat. In order to insure a perfect weld, none of this scale must remain between the two pieces; and by shaping the pieces as directed above, the metal will first stick at the center of the welding surfaces, forcing the melted scale out at the sides of the joint as the hammering continues.

Q. What is meant by a dirty fire; what causes it? What difficulties arise from it? How may it be remedied?

A. A dirty fire is caused by continued use, during which time, slag and foreign metal of different kinds form, or from heating metals or alloys which contain lead, zinc, tin or copper.

A uniform heat cannot be obtained and a weld cannot be made in a dirty fire.

A remedy is to dig out the inside and the bottom of the fire and replace with fresh, clean coke and coal, or for a large or difficult weld the fire should be pulled out entirely and rebuilt.

Q. What are fluxes and why are they used?

A. See page 669.

Q. Describe the proper manner of taking a welding heat.

A. To take a welding heat, the fire should be cleaned out, and clear, coked coal, not gaseous coal, should be used. The main points in a welding heat are: To heat the iron equally all through; to obtain a proper degree of heat; and to keep the surfaces that are to come in contact as free from oxidation, and at the same time as clean, as possible. To accomplish these ends, the iron must not be heated too quickly after it has reached a good red heat; and the fire must be so made that the blast cannot meet the metal, at any point, till it has passed through the bed of fire. At this point the flux may be sprinkled on the work; but do not remove it from the fire for that purpose, as that would cause it to oxidize or scale very rapidly.

Q. Describe the manner of working a weld after the proper heat is obtained.

A. See page 670.

Q. Name the different shapes into which welding points are made, giving the various classes of work for which each are used.

A. See page 671.

Q. Describe the process of annealing steel.

A. Heat the steel to a cherry red, allowing it to become hot slowly, and bury it in warm, dry ashes or lime, to remain there till cold.

To anneal copper or brass, it is heated to a dark cherry and plunged suddenly in cold water, allowing it to cool in the water. It will be noted that this treatment has the opposite effect on steel, which is to harden it.

Q. Describe the method of case-hardening.

A. For a thin hardened surface, heat the piece to a bright cherry red and apply cyanide of potassium or yellow prussiate of potash to the surface while hot, reheat after applying the potash and dip in cold water to harden the surface. The heating and application of potash may be repeated a number of times according to the depth of hardness required, the piece should not be dipped in water, however, until after the last course of heating and potash is applied.

Another method of case-hardening is to pack the piece in an iron box filled with carbonaceous material, such as granulated raw bone, animal hoofs, etc., and place the whole in a slow furnace, allow it to heat to a cherry red, and remain at this temperature from 6 to 20 hours, according to the depth of hardness required. The piece is then taken from the box, and while red hot, plunged into cold water; this hardens the surface. Any cracks or openings in the box should be tightly sealed with fireclay before heating.

Q. What metals are usually case-hardened?

A. Wrought iron, machine or mild steel, and such grades of iron or steel as are so low in carbon, that heating and dipping in water does not have any effect on the temper.

Q. What is meant by tempering tool steel?

A. The process by which tool steel is hardened to any degree desired, when made into tools for cutting other metals or wood.

Q. How are the different degrees of hardness determined?

A. By the colors through which the surfaces of the steel will pass in that part of the process known as "drawing the temper."

Q. Describe the process of tempering tools.

A. The portion on which the cutting point or edge is made, is heated to a cherry red and the extreme point dipped in cold water, immediately after which it should be rubbed bright with a piece of brick or emery strip of wood. This point when first taken from the water will be very hard. It is then the

colors should be watched for; and when the point runs the desired color, dip suddenly and cool off entirely.

Q. Name the colors in the order in which they appear in tempering steel.

A. The colors run successively as follows: The first being hardest and the last being softest. When first taken from the water and rubbed bright, the first color is German silver, blending next into dark gray, then light straw, dark straw, light copper, dark copper, light purple, dark purple, light blue and dark blue; and finally it returns to the original color, as before being heated and dipped.

Q. Give the colors to which the various tools ordinarily used aboard ship should be drawn in tempering.

A. See page 675.

Q. Give the method of tempering spiral springs.

A. Heat to dark cherry red, cool in oil, then cover in oil and burn the oil off. In heating springs be careful to have an even heat, and heat very slowly.

Q. Give a method of tempering flat springs.

A. Heat to a dark cherry red, cool in oil and draw to blue three times.

Q. Describe the method of welding chain.

A. See page 654.

Q. What material is best suited for making chain?

A. A Swedish or Lowmoor iron, which are fine grades of wrought iron.

Q. Why is wrought iron best for this purpose?

A. See page 654.

Q. Describe the methods of getting the proper measurements of stock for making forgings.

A. See page 666.

Q. Describe the process of shrinking.

A. See page 653.

CHAPTER VII.

INSTRUCTIONS FOR PAINTERS.

(General Specifications—Appendix 6.)

General Instructions for Painting and Cementing Vessels of the United States Navy.

(Issued by the Bureau of Construction and Repair.—Revised, 1914.)

GENERAL.—INSTRUCTIONS.

1. Extent.—(a) All instructions contained herein shall govern for work done by contractors, navy yards, or ship's force in so far as applicable. At private yards all paint, oil, shellac, etc., ordered for the government shall be kept in a separate place, and kept together where inspection can be made at any time by the superintending constructor.

BRUSHES.

Brushes used in painting should be thoroughly clean before using and cleaned after each day's work; a set of brushes should be kept for the use of each kind of paint. Paint brushes for use with shellac or ship-bottom paint or any other paint having alcohol as an ingredient should be of the vulcanized rubber type.

SHIP'S REQUISITIONS AND TEST REPORTS.

Ships shall not make requisition for paints other than these mentioned herein, except for a cause which must be specifically stated on the requisition. If the cause is not sufficient to warrant deviation from the standard formulas, the standard paint suitable for the purpose will be furnished instead of the special paint requested. Either the formula number or the purpose for which the paint is to be used shall

be stated on ship's requisitions. Ships receiving a standard paint or cement, which in quality or quantity is not satisfactory, should immediately determine exactly and to what extent the defects exist and if possible determine the cause of the defects and report the findings to the yard, where the paint or cement was manufactured. The invoice number under which the paint was received should be stated in the correspondence for identification. The date of the manufacture of each particular kind of ready mixed paint shall be stamped on the can containing the paint, and should be referred to in reporting unsatisfactory paint. Ships receiving special paint (paints or cements other than those herein mentioned) should, if possible, compare it with a standard paint intended for the same purpose and submit to the yard from which the special paint was issued, a complete report covering the results obtained.

2. Quality and Approval of Materials.—The quality of all materials used on naval vessels in connection with painting and cementing shall conform to the requirements of the latest specifications for same issued by the Navy Department, obtainable from the Bureau of Supplies and Accounts. At private yards material will be subject to test at any time by the superintending constructor. When required for this purpose, samples will be sent to the nearest navy yard having a chemist. or, at the request of the contractor and at his expense, a competent outside chemist may be employed for this purpose, if approved by the superintending constructor. The chemist shall submit to the superintending constructor a signed report of his investigation. Any painting done before materials are approved will be at the risk of the contractors. If the test shows that the paints, etc., fail to meet the requirements of the specifications in any respect, the lot of material from which the samples were taken will be rejected for use on naval vessels and any work already done with these materials shall be

cleaned off and satisfactorily repainted. Paints, etc., which satisfactorily pass the official test are to be kept entirely separate from all other paints, etc.

3. Mixture of Paints.—The mixtures for the several colors used for ship's structure, fittings, piping, etc., shall in general conform to the formulas herein. During the building of contract-built vessels and before delivery to the government, the bureau will permit the use of paints, of proper color, mixed in accordance with contractor's private formulas, provided same have been demonstrated to be equal to the mixtures stated herein and have received the approval of the superintending constructor. If not issued ready mixed, paint used by the ship's force should be mixed according to the formulas herein. All ready mixed paints, manufactured at navy yards and issued to ships, must be *thoroughly stirred* in cans or drums before using, in order to insure that paint has proper body and to prevent waste by residue left in drums. The surplus of such paints intended for future use should be carefully protected from the air. Whenever paints in accordance with the formulas stated herein are required by ships in commission, they should, if practicable (with the exception of red lead), be obtained from navy yards "ready mixed" instead of obtaining the ingredients and mixing same on board ship.

4. Cleaning Metal Surfaces.—(a) All steel and iron work which is to be painted or cemented shall be carefully and thoroughly scraped, scaled and cleaned down to bare surface, and shall be thoroughly dry before the paint, cement or bituminous compositions are applied. In no case shall paint or other coatings be applied over damp, oily or greasy surfaces, or over any foreign substances. Each coat of paint shall be allowed to dry hard before applying another coat, and shall adhere firmly and uniformly to the surface of the metal. Before painting galvanized work, the surface thereof shall be

cleaned with an ammonia, vinegar, or other approved solution in order to secure firm adherence of paint.

Care shall be taken not to paint surfaces which are to be cemented. All hull steel which is not pickled or furnaced shall be allowed to stand after receipt at the yard a sufficient length of time to permit of removal of the mill scale, as far as practicable, by wire brushes, before any paint is applied.

(b) The preparation of the painted surface of metal work for repainting by ship's force shall be accomplished by scrubbing it with common brown soap or soapine and fresh water, using burlap or scrubbing brushes. Surfaces on which soap has been used shall be rinsed and in no case shall the water containing soap or soapine be allowed to run down on other painted surfaces without immediately rinsing it from the surface. Where the old paint is lumpy or thick, fine sand may be used with soap, but under no circumstances shall steel brushes or scrapers be used unless the whole surface is to be cleaned.

(c) For vessels in commission see also "Naval Instructions."

(d) In preparing surfaces for the application of bituminous compositions it is necessary that special care be used to clean the metal of all rust, scale and grease. Where the scale is heavy pneumatic hammers should be used, but in all cases the rust shall be removed even to the extent of using sand paper and fine steel wire brushes. The last operation should be to dust off the surface with a fine hair duster, thus removing all the fine dust. In bilges where considerable grease has been standing it is necessary after scaling, to cut and clean the grease by scrubbing with gasoline after which the necessary cleaning with sand paper, wire brush and duster should be done. The bituminous solution should be applied not longer than one hour after it has been inspected and passed as ready.

5. Care in Painting Machinery and Hull Fittings.—Special care shall be exercised in painting all machinery, such as ammunition-hoist gears, deck winches, power doors, hatches, etc., to see that no paint is applied to working surfaces or to oil holes or grooves; and to prevent rubber gaskets in doors, manholes, light boxes, side lights, hatches, deck scuttles, or in any other fittings from becoming covered with paint, as paint causes the rubber to deteriorate rapidly. When paint is accidentally applied to gaskets, it shall be immediately and thoroughly removed; petroleum spirits shall be used for this purpose. The bearing edge of door frames, etc., shall never be painted. Paint shall not be applied to fittings in such a way as to cause the bearings to become frozen.

6. Completion.—When the vessel is delivered to the government the paint and cement work shall be completed, perfectly clean, and in thoroughly first-class order for service. As many coats as may be necessary shall be applied to produce this result, with the provision that any undue accumulation of paint is to be removed by scrubbing, sandpapering, scraping, or other means, and the work refinished with the required number of coats, generally not less than four coats. Any unsatisfactory painting or cementing prior to delivery shall be removed and new paint or cement applied, to the satisfaction of the superintending constructor. If at any time within six months after delivery of the vessel to the government it is found that any paint or cement work in any part of the vessel has proved defective, the work so condemned shall be done over at the expense of the contractors.

OUTSIDE PAINTING.

7. Outside of Hull.—(a) The entire outer surface of the hull of all types of vessels (see section (d) below) and, in general, all metal surfaces exposed to weather, such as the superstructure, bridges, hammock berthing, masts, ventilators,

smoke pipes, conning-towers, signal towers, inclosures, coamings, plating behind exposed armor, barbettes, turrets and side armor, after same is fitted, etc., and exposed fittings, except those which are galvanized, shall be given a priming coat of red lead (formula No. 1) as a protection during or immediately after the assembling of the ship's structure.

(b) Propellers and exposed shafting under the cognizance of the Bureau of Steam Engineering shall be painted with red lead, or as may be directed by that bureau.

(c) The priming coat shall be touched up from time to time, so as to give the proper protection to the metal during the construction of the vessel, and so that there shall be a complete, intact, dry and hard, coat of priming paint on the vessel before launching.

(d) Galvanized outside plating shall not be given a priming coat of paint, except on plates edges and over rivet heads.

8. Anticorrosive and Antifouling Paint.—(a) At least two months before launching, the priming coat of red lead applied to the underwater plating of vessels, not having such plating galvanized, shall be touched up as may be necessary in order to present a complete hard, dry, and intact coat of red lead at the time of launching. There shall be no further touching up with red lead during the two months preceding the launching date.

(b) Just prior to launching, one complete coat of Norfolk anticorrosive (formula No. 14) and one complete coat of Norfolk antifouling (formula No. 15) shall be applied; previous to the application of the anticorrosive and antifouling paint, the priming coat of red lead should be thoroughly inspected to see that it is in the condition necessary to give the proper protection to the metal, and any loose paint should be removed down to the bare metal and the metal left bare.

(c) On vessels, the underwater plating of which is galvanized, red lead shall not be used; instead, just before launch-

ing, such plating shall be given one complete coat of Norfolk anticorrosive ship-bottom paint (formula No. 14) and one complete coat of Norfolk antifouling paint (formula No. 15).

(d) On all types of vessels (see item (e) below), when the vessel is docked for the builder's trial all loose paint below the design water-line shall be scraped off down to the bare metal, and when the surface of the metal is thoroughly dry, there shall be applied two complete coats of anticorrosive ship-bottom paint (formula No. 14) and one complete coat of antifouling ship-bottom paint (formula No. 15).

At the last docking before the preliminary trial, or before delivery to the government, the former coats of anticorrosive and antifouling paint shall be thoroughly cleaned and touched up; and the entire underwater surface of the vessel up to the load water-line (including propellers and exposed shafting, if satisfactory to the Bureau of Steam Engineering) shall be given a complete coat of Norfolk anticorrosive ship-bottom paint (formula No. 14) and a complete coat of Norfolk antifouling ship-bottom paint (formula No. 15).

(e) On submarines the antifouling paint shall be special slate colors, if so directed by the bureau.

(f) At all dockings for painting after commissioning, the underwater bottoms of all types of vessels shall not be touched up or painted with red lead, but the anticorrosive paint shall be applied over the red lead firmly adhering to the plating, otherwise directly to the bare metal. At such docking there shall be applied two complete coats of anticorrosive ship-bottom paint (formula No. 14) and one complete coat of antifouling ship-bottom paint (formula No. 15).

(g) No paint shall be applied over zinc protectors, on ship bottoms, and such paint as becomes smeared on surface or edge of the protectors shall be immediately and entirely removed. Red lead putty shall, however, be used for bedding the zincs.

9. Boot Toppings.—At the time of last docking referred to in paragraph 8, boot topping shall be applied. For all

light gray colored vessels, except submarines, light gray boot topping, in accordance with Norfolk formula No. 134-N shall be used. The width of the boot topping on vessels, except as specified below, shall be as follows: Upper edge 30 inches above and 18 inches below engineering competition water-line; that is, the water-line with two-thirds fuel and the vessel with full load in all other respects. For destroyers, submarines and torpedo-boats the upper edge of the boot topping shall be 8 inches above and the lower edge 16 inches below the above referred to water-line. For tugs, ammunition barges, fuel-oil barges, water barges, transfer barges, and monitors the upper edge of the boot topping shall be 8 inches above and the lower edge 16 inches below the equivalent of the above referred to water-line. For submarines, slate color boot topping (formula No. 4) shall be used. On fuel ships, supply ships, transports, mine planters, mine depot ships, repair ships, tenders, auxiliaries, etc., the boot topping shall extend from the full load draft line to the light cruising line, viz.: Draft with no cargo, bunkers about half full, and water in the ballast tanks. For all vessels with hulls painted white, red boot topping (formula No. 2) shall be used, the width to be as stated above for black boot topping. No boot topping shall be painted on coal barges and ash lighters.

10. Bilge, Docking Keels and Side-Plate Rudders.—The inside surface of bilge and docking keels and side-plate rudders shall be thoroughly coated with a mixture of red and white lead; the wood filling of bilge keels shall be thoroughly coated with the same mixture. After riveting, the mixture of red and white leads should be pumped into these keels and into the rudder in order that all cavities may be filled. Escape holes, afterwards stopped up, to be provided in order to avoid bulging the plating.

11. Rivet Cement (Smoothing).—Slate-color smoothing cement (formula No. 62) shall be used at the butts and joints

of armor only, and may be applied either before or after the priming coat of paint. Red color smoothing cement (formula No. 63) shall be used where necessary for smoothing decks prior to laying linoleum and for filling the crevices between strips of linoleum when laid.

12. Plating Behind Armor.—(a) The plating behind armor, including armor shelf, shall be coated with at least three coats of red-lead paint. Each coat shall be allowed to thoroughly dry before the succeeding coat is applied and the surfaces shall be entirely free from drill oil, etc.

(b) *Wood Backing.*—Before the wood backing is finally placed in position the surface of plating behind armor, including armor shelf, shall be given a single coat of vegetable tar, and the entire surface covered with sheets of felt (sample to be approved by the superintending constructor).

(c) As the wood backing is being finally bolted in place, the surface thereof laying against the plating behind armor shall be covered with a thick coat of vegetable tar, in order that the small interstices between the backing and the plating may be filled, the surplus vegetable tar being allowed to squeeze out.

13. Colors of Paint for Different Types of Vessels.

(a) *Painted light gray*—

Battleships.
Cruisers.
Monitors.
Destroyers.
Torpedo-boats.
Submarines.
Tenders to torpedo vessels.
Auxiliaries.
Fuel ships.
Supply ships.
Tugs.
Transports.

Special types (mine planters, mine depot ships, repair ships, etc.).
Air craft.
Steel vessels unserviceable for war purposes.
Other vessels which are to cruise in company with the above on special instruction only.

(b) *Painted white and spar color—*
Converted yachts.
Gunboats.
Sailing ships for training purposes.
Small vessels engaged in river service in China and the Philippines.
Other vessels acting singly in American tropical waters or on Pacific coast, but only on specific instruction.

(c) *Painted white and green stripe—*
Hospital ships.

Hospital ships shall be painted white outside (formula No. 6), with a horizontal band of green (formula No. 12); the band shall be 60 inches in breadth and parallel to continuous sheer line. The distance of upper edge of green band below continuous sheer line should be about 5 feet 6 inches. The boats of above-mentioned ships, also small craft which may be used for hospital work, shall be distinguished by a similar band about 4 inches in breadth, painted on the sheer strake (first strake below molding) extending from stem to stern. (See paragraph 23.)

(d) *Painted black—*
Hulls of wooden receiving and other station ships.
Wooden vessels unserviceable for war purposes.
All yard craft (except yard tugs, ammunition barges, water barges) shall be painted black all over. Hulls of yard tugs, ammunition barges, and water barges shall be painted black; upper works, spar color.

14. Light Gray Vessels.—(a) For all vessels required by subsection (a) of paragraph 13 to be painted light gray the following will apply: Just before the preliminary trial the whole exterior of the vessel above the water-line, including all fittings which are not galvanized, but excluding the exceptions noted below, shall be painted with one coat of the standard light gray over the priming coat of red lead required by paragraph No. 7 (Norfolk formula No. 133-N or 4a). Interior surfaces that may be exposed to view from the exterior, such as inside of doors, hatch covers, etc., shall also be painted the standard light gray. Exceptions: Metallic life buoys shall be left unpainted and of the natural oxidized color; cork life buoys shall be painted white and have the name of the ship painted upon them in black, but in case of hostilities they shall be painted light gray or covered at night with a slate-colored canvas screen; galvanized fittings shall not be painted; canvas boat covers, all other exposed covers and hatch hoods, ship's weather cloths and signal flag board bag, shall be painted light gray.

After commissioning, galvanizing fittings which are permanently attached to the ship, and on which the galvanizing has worn off in service, may be painted; the standard light gray shall be used for this purpose.

Sample slab showing the standard light gray may be obtained on application to the commandant of the nearest navy yard. In the case of new work or of vessels undergoing repainting for light gray, the paint or smoothing cement already applied need not be removed, but it must be thoroughly dry and hard before the light gray is applied. Smoothing cement shall be sandpapered and touched up with light gray before final painting. Just before the delivery of the vessel the coat of light gray required by (14a) shall be touched up as necessary, and in addition one complete coat of light gray shall be applied; in general, two coats will be sufficient for the finishing coats of vessels under construction; if, however, it is found to be

necessary, additional coats shall be applied or touching up shall be done to insure the paint work being in first-class condition at the time of delivery of the vessel to the government. Guns shall be painted light gray. Inside of ventilator cowls shall be painted light gray.

PAINTING FOR VESSELS IN COMMISSION AND UNDER CONSTRUCTION.

(From Bureau Construction and Repair, Cir. Let. 2/6/18.)

The following painting instructions will apply to all vessels in commission and under construction. For vessels under construction the modifications from present requirements are considered as developments of the contract plans and specifications:

(a) The entire exterior of the vessel, except in cases where camouflage painting has been or is authorized, shall be painted standard light gray (formula No. 4a).

Standard "Light Gray" (No. 4a).
Formula for One Gallon.

Neutral blanc fixe	3 lbs. 5 ozs.
Zinc oxide, dry	3 lbs. 7 ozs.
Graphite (Acheson or amorphous lubricating)	As required; about 3.6 ozs.
Linseed oil, raw	21⅓ gills.
Turpentine substitute	3 gills.
Drier	2½ gills.

(b) The exact shade of "light gray" should be obtained from matching with an actual sample of government-made paint, by daubing same on a piece of glass. A one-pint sample of "light gray" may be obtained from the navy yard, New York. Experience has demonstrated that for any shade of "gray" the amount of graphite to be used depends upon the physical characteristics of the graphite used.

(c) The black band painted at top of smoke stacks shall be omitted and the smokestacks shall be painted "light gray" throughout.

Formula for Smoke Stack Paint.

White lead, dry	4 lbs. 13 ozs.
White zinc, dry	1 lb. 14 ozs.
Lampblack, dry	1¾ ozs.
(or as required to produce present slate color).	
Litharge	5⅜ ozs.
Mineral oil	2 quarts.
Drier	2½ gills.
Damar varnish	1 quart.

The above formula is in accordance with formula No. 10 of general instructions for painting and cementing vessels of the U. S. Navy, Edition of 1914, with the exception of the amount of lampblack. The amount of lampblack to be used depends entirely upon the tinting strength of same, 1¾ ounces being approximately correct.

(d) Instead of red and green for inside of running light boxes, port and starboard sides respectively, the running light boxes shall be painted "light gray" throughout.

(e) Weather decks of destroyers are to be finished with two coats of slate color boot topping paint (formula No. 4) instead of black as now required.

Slate Color Boot-Topping (No. 4).

Formula for One Gallon.

White zinc, dry	3 lbs.
Lampblack, in oil	3 ozs.
Mixing varnish	3 pts. 2 gills.
Petroleum spirits	2 pts.
Drier	2 pts.

(f) *Black Band on Smokestack.*—A black band (smoke band) 14 inches in width shall be painted around the top of the smokestacks on all white vessels. After commissioning

such vessels as require it shall have painted additional black stripes 14 inches in width, located 14 inches below the "smoke band," and 14 inches apart, in number as may be required to distinguish the vessels by and in divisions. The smokestacks of fuel ships shall be painted as follows: Beginning at the top of the smokestack, first 6 feet, black; the next 8 feet, slate color; and the balance of smokestack, black, black asphaltum varnish, in accordance with standard specifications, being used for this purpose.

15. White Vessels.—(a) The outside of hull plating, between the upper line of boot topping and the highest practically continuous sheer line, also the inside of bulwarks, shall be painted white, generally in accordance with formulas Nos. 27 and 6. All fittings secured to the hull within the area of white paint (such as anchors and anchor chains) and anchors stowed either on billboards or in hawse pipes, and anchor chains on outside of ship from billboards to hawse pipes, also under break of poop and forecastle decks, will be painted white. In applying the paint two or more coats of formula No. 27 will be applied, after which the final coat of formula No. 6 will be applied. Should repainting be necessary, and if a single coat will be sufficient, formula No. 6 shall be used; if two coats are necessary, the first coat shall be formula No. 27 and the second coat formula No. 6.

(b) *Parts of White Vessels to be Painted Spar Color.*—The superstructure and in general all fittings above the practically continuous sheer line (except hardwood fittings, which shall be finished bright and varnished) shall be painted spar color (formula No. 7). The above applies in general to all fittings within the area of spar color except chests, doors, skylight covers, window frames, etc., when of teak or mahogany, which shall be finished bright and varnished, or wood gratings, which shall be oiled; the inside of cowls shall be painted vermilion unless otherwise directed. Spar color in accordance with formula No. 7 shall be used for exposed gun foundations,

mounts and shields; the cementing and painting of these fittings shall be done only after consultation with, and to the satisfaction of, the representative of the Bureau of Ordnance. This spar color must match the standard sample which shall be furnished upon application. At least three coats of spar color shall be applied to fulfill the requirements for surfaces to be painted. Guns of white vessels shall be painted black.

(c) *Smokestacks; Spar Color.*—Smokestacks, except at top (see subsection (c) of paragraph 14), shall be painted spar color with a special smokestack paint applied over the priming coat covered by paragraph 7; either formula No. 8 or formula No. 9 may be used, formula No. 8 being preferable.

16. Draft and Load Marks.—Draft marks shall be painted in accordance with the following table:

Color of surrounding paintwork.	Color of draft marks.
White	Black (formula No. 13).
Red or black	Black (formula No. 13).

The maximum load water-line mark shall be in accordance with instructions which the bureau will furnish upon request.

Load Water-Line Mark, Inside.—The load water-line shall be indicated on the inside of the vessel by a black paint stripe (formula No. 38), 1 inch in width, extending throughout the length of the vessel, connecting the load water-line label plates, which should be located where readily accessible and visible.

This water-line shall be the engineering competition load water-line, viz., with two-thirds fuel and in all other respects full load.

17. Ship's Name or Designation, Bow and Stern Ornaments When Fitted, Trucks and Balls for Flagstaffs.—(a) These fittings shall be painted in accordance with the following table:

Color for ship.	Color for lettering, etc.
White	Gold leaf and appropriate colors.
Black	White (formula No. 6).
Light gray	Name or designation, black (formula No. 13).
	Bow and stern ornaments, same color as hull.
	Trucks and balls for flagstaffs, same color as hull.

On torpedo craft the brass distinguishing numerals shall be left bright, and covered at night with a metal or canvas screen as directed, painted the same color as the vessel. The distinguishing masthead shapes shall be painted black.

In order to secure permanency when gold leaf is to be applied, a medium drying gold size shall be used, *i. e.,* a size that will dry ready for gilding in about 24 hours.

All naval auxiliaries shall have painted on the bows in block letters about 6 inches in depth the following:

AUXILIARY.
U. S. NAVY.

(b) *Name and Number for Coal Barges, Water Barges, etc.*—On the bow, flashboards or coamings, as may be directed, the name and number of the craft shall be conspicuously painted in block letters and figures about 18 inches high, thus:

U. S. NAVY COAL BARGE NO. 69.
U. S. NAVY WATER BARGE NO. 10.
U. S. NAVY ASH LIGHTER NO. 11.
U. S. NAVY AMMUNITION LIGHTER NO. 6.

18. Running Light Boxes.—The lamp pockets shall be painted red for port pocket and green for starboard pocket.

19. Waterways.—On vessels painted white, the waterways shall be painted with boot topping paint (formula No. 2); on light gray ships, with light gray boot topping (Norfolk formula No. 134-N).

20. Zinc Protectors.—Zinc protectors must not be painted where exposed to water; zinc protectors shall, however, be bedded in red-lead putty.

21. Weather Decks of Torpedo Craft.—In time of peace a red deck paint (Norfolk formula No. 107-Na) should be used on decks. No red lead priming coat should be used under the red deck paint.

The following extract is quoted from Bureau of Construction and Repair, circular letter No. 15635-A-410, of January

17, 1918: "(a) The weather decks to be finished with two coats of slate color boot topping paint (formula No. 4) instead of black as now required."

22. Submarines. (a) *Painting.*—During construction, the surface of all steel work, inside and outside (except metal to which special paint or bituminous compositions are to be applied, interior of fuel-oil tanks, and faying surfaces of laps and straps of plating in way of fuel-oil tanks), shall be given a priming coat of red lead (formulas Nos. 1 or 26) and kept touched up as required by paragraph 7.

(b) The instructions contained in paragraphs 7, 8, 9, 14 and 17 apply to submarines. Decks of submarines shall be painted light gray. Metal submarine flag shall be painted in the colors required by New York plan 46400, sheet 72 (hull division).

Trimming or stub masts shall be painted with alternate stripes of black and light gray, 6 inches in width.

The outside of hull and under the superstructure and inside the superstructure, fairwaters and other similar locations on submarines shall not be painted with red lead paint, but two coats of flexible submarine paint No. 13, shall be applied on the bare and dry metal.

The living and operating spaces, except where cork sheathing is to be applied, shall be painted with two coats of red lead (formula No. 1) and the visible portions thoroughly cork painted where directed, and finally finished with one coat of inside white (formula No. 27), one coat of flat white (formula No. 29), and one coat of gloss white (formula No. 30).

In case the adhesive used for cork sheathing is of such a nature as is itself a protective coating, only one coat of red lead will be required on the steel work under such sheathing, provided this coat is in a satisfactory condition when the insulation is applied. Exposed surface of cork sheathing to be finished in white as above. In engine room, in addition to

the above, a dado will also be painted as required by paragraph 32.

Portions of the interior which are difficult of access shall be given special treatment as approved.

The lower interior surfaces of main, auxiliary, midship, adjusting and compensating ballast tanks, trimming tanks, duct keel and bilges, and all inaccessible places not otherwise specified, shall be coated with bituminous solution, enamel, or cement applied as directed in paragraph 30.

The interior of fuel tanks shall be wire brushed and coated with heavy mineral oil for protection during construction. Before being filled with fuel oil or gasoline, these tanks shall be thoroughly cleaned to remove all dirt or other foreign material. If specifically authorized, in cases where it is possible to seal the tanks, no coating shall be applied, but the tanks shall be thoroughly cleaned and dried and kept cleaned until they are used for carrying fuel oil. No paint shall be applied in these tanks.

The space between the battery tank and lining, and the wood of the floors of the tank should be carefully treated with bituminous compositions. In addition to the lead lining bituminous coatings should also be used. These coatings should be applied both to the inner and outer sides of the lead lining. In new construction the battery tank sides, bottoms and ends will be coated with successive layers of asphaltum, insulating paper, 4-pound lead lining, asphaltum and insulating paper to a total thickness of not less than $\frac{3}{8}$ of an inch.

When special battery tanks are not fitted, the cells being of the closed type, the frames and shell plating beneath the battery shall be coated with an approved cement of acid-resisting enamel or coating.

Battery deck and battery joiner work shall be coated with an approved acid-resisting paint.

Battery deck cover shall be coated with slate-color boot topping (formula No. 4).

All piping to be painted in accordance with paragraph 50. Gasoline piping shall be painted the same as fuel-oil piping.

Engines and main shafting and all fittings, auxiliary shafting in engine room and auxiliaries operated therefrom (air compressor, bilge pump and foul-air pump) shall be finished brown (formula No. 36).

Mechanical indicator shall be finished white with black marks.

Galvanized and brass work in the interior of the vessel shall be treated as specified in paragraphs 4 and 28 (b).

Cement.—The composition and application of cement shall be in accordance with the instructions in paragraphs 51 to 62, inclusive, so far as applicable to submarine work. No cement shall be applied in the fuel tanks.

23. Ship's Boats.—In general, boats shall be painted white or light gray, depending upon the color of the vessel to which issued. No boats shall be finished bright except upon specific authority of the bureau.

Boats for hospital ships and small craft, used for hospital work, shall be painted white with a distinguishing band of green about 4 inches wide painted on the sheer strake (first strake below molding), extending from stem to stern.

The following parts of pulling boats (including motor sailing launches) shall be left bright for scrubbing:

Thwarts.
Stern sheets.
Bow and stern gratings.
Platforms on level of thwarts.
Partial decks.
Backboards.
Stretchers.
Fenders (chafing battens).
Awning stanchions.
Flagstaffs.
Tillers.
Top of rudder above lower edge of fender at gunwale.

Excepting the above-mentioned parts, the entire outside and inside of pulling boats on light gray vessels shall be painted

light gray. With the same exceptions, pulling boats on white vessels shall be painted white on the outside and on the inside down to the level of the footlings. The footlings and below shall be painted light gray.

The following parts of power boats on light gray vessels shall be left bright for scrubbing:

Fenders (chafing battens).	Decks.
Waterways.	Flagstaffs.

In addition to the bright parts of light gray boats, the following parts of white boats shall be left bright and varnished:

Staving.	Seats.
Coaming.	Seat stanchions.
Capping.	

With the above-mentioned exceptions, power boats on light gray vessels shall be painted light gray on all exposed portions, including cockpits, whereas power boats on white vessels shall be painted white on the outside, the cockpit floors being painted light gray.

The interior portions of all power boats shall be painted white down to the level of the floors; floors and below to be light gray.

Outfit for light gray boats, such as buckets, breakers, breaker stands, chests, etc., shall be painted light gray. Straight oars and boat hooks shall be kept bright for scrubbing. These articles when manufactured shall be given a coat of raw linseed oil for protection while in store. Spars and spoon oars shall be given two coats of shellac and one coat of spar varnish. Canvas outfits (except boat covers and engine covers exposed to view, which will be light gray) shall not be painted. The standing portion of canopy covers shall be given one coat of the following mixture:

White lead	lbs. 25
Raw linseed oil.....	gal. 1
Drier	pt. ½

The folding ends of canopy covers shall not be painted.

Breakers for white boats shall be varnished.

Boat chests for white boats shall be painted white.

Brass work of all boats shall be kept bright for polishing. Smokestacks and ventilator cowls of barges shall be of brass and polished. Smokestacks and ventilator cowls on other power boats shall be painted, but brass rims of cowls may be polished. Ventilator cowls shall be painted vermilion inside.

New boats upon completion, unless required immediately for issue, shall be given one coat of light gray priming made in accordance with formula No. 57, puttying and final painting being deferred until the boat is required for issue. In the case of power boats the boat shall be puttied and given an additional coat of paint for the purpose of protecting the putty before the boat is placed overboard for machinery trials. Such portions of the boat as would be finished bright if boat were painted white shall be given a coat of linseed oil and drier. When boats primed as above are issued for use, they shall be given two coats of paint, the color of which is to be determined by the color of the vessel to which they are to be issued. If boat is to be light gray, the second and third coats shall be light gray. If boat is to be white, the outside of hull and inside of hull down to footlings or floors shall be given a second coat of formula No. 27 and a third coat of formula No. 6, the footlings, floors and bottom being given two coats of light gray. Bright work shall be given two coats of orange shellac and one coat of spar varnish. Mahogany shall be given one coat of mahogany stain before shellacking.

In cases where new boats are required for immediate issue, the priming coat above for boats to be issued to light gray vessels may be omitted and three coats of light gray given; if boat is required for immediate issue to a ship painted white, the priming coat above may be omitted and formula No. 27 substituted, followed by a second coat of formula No. 27 and a final coat of formula No. 6.

Repainting Old Boats.—If a boat painted white is required for reissue to a light gray ship, the white paint outside and inside shall be removed by burning off, then sandpapered smooth, and given one coat of priming (formula No. 57) (if boat is recalked, it shall be puttied with light gray putty), and finally finished with one coat of light gray throughout.

If a boat painted light gray is required for reissue to a vessel painted white, the light gray outside and inside down to the footlings, except on parts to be finished bright, shall be removed by burning off, the boat shall then be sandpapered and given one coat of white (formula No. 27), and a final finishing coat of white (formula No. 6). If recalked, it shall be puttied with white-lead putty. Inside footlings and below shall be given one coat of light gray if necessary. All paint shall be removed from parts which should be bright; and when thoroughly clean shall be given two coats of orange shellac and one coat of spar varnish.

The cost of pulling boats as reported to the bureau shall include the cost of one coat of priming. The cost of all power boats shall include, in addition to the priming, puttying of the seams, and an additional coat of paint applied to the boat for the purpose of protecting the putty before she is placed in the water for machinery trials. The job order for building the boat will then be closed.

The final painting and puttying to make a boat ready for service will be done on a separate job order.

Whenever instructions are received to issue a boat to a vessel, or to prepare same for shipment to another yard for issue to a vessel, or for other immediate service, the boat shall be finally painted and otherwise made ready for service in all respects before shipment. When boats, not required for immediate service, are shipped from one yard to another, they will not be given the final painting before shipment.

The use of paint removers should be confined to the removal of paint from surfaces upon which varnish is to be applied to prevent discoloration of the wood. For all other work the torch should be used for removal of paint.

24. Aircraft.—*Heavier than air* types shall have exposed surface finished in standard light gray, flat finish. Metal fittings shall be painted or enameled in black. Standing rigging will be left bright and covered with a flexible varnish or other approved protective coating. Control wires shall be coated with a protective lubricant where they pass through fair leaders or over sheaves. Elsewhere they will be treated in the same manner as standing rigging. The plane surfaces, control surfaces, and stabilizers will be finished in natural color with a final coat of special varnish.

The inside of cockpits shall be finished in flat white.

The decks of cockpits shall be finished in standard light gray.

Distinguishing Insignia for United States Aircraft.—1. A distinguishing insignia for all United States Government aircraft has been adopted and is published herewith. This insignia is a red circle, circumscribed about inner blue circle and center white circle. The diameter of the red circle will be 5 feet for all airplanes having a chord length equal to or greater than 5 feet. In cases of chord length less than 5 feet diameter of circumscribed red circle will be made equal to such chord length. The diameter of the inner blue circle will be two-thirds and the diameter of the center white circle will be one-third of the diameter of the red circumscribed circle. The shades of red, white and blue will be the same as those used in the American flag.

2. One of each of these insignia will be placed on the upper surface of each upper wing in such a position that the circumference of the circumscribed circle just misses contact with the wing flap. One of each of these insignia will be placed in a corresponding position on the lower surface of each lower wing. Both sides of that portion of the rudder which is in rear of the

rudderpost will be painted with three equally wide bands parallel to the vertical axis of the airplane and colored red, white and blue of the same shades as mentioned hereinbefore, the red band being nearest the rudderpost, the white band in the center, and the blue band at the tail of the rudder.

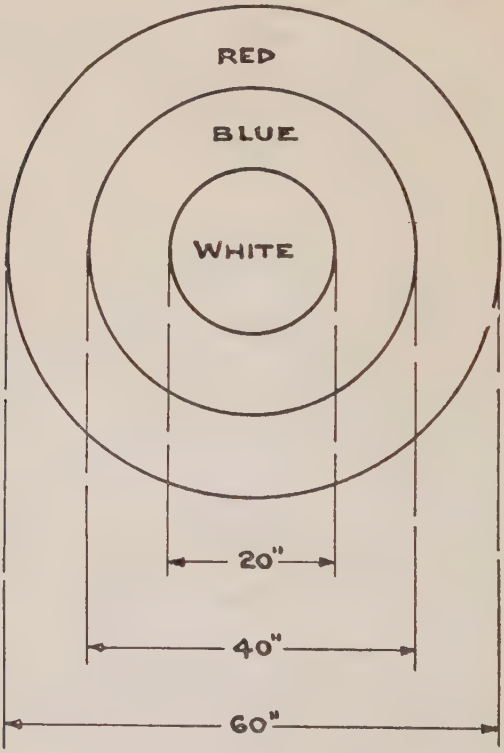

FIG. 122.—Aircraft Insignia.

3. One of these insignia will be placed on top and one on bottom of envelope of dirigible balloon, the center of each insignia being in a vertical plane through the longitudinal axis of the envelope. The center of insignia on top will be at the intersection of the vertical plane hereinbefore mentioned with

a vertical plane through the point of greatest diameter of the envelope. The center of insignia on bottom will be just forward of suspension band. The circumscribed circle of insignia for dirigible will be 5 feet in diameter. The rudder of each dirigible will be marked in a manner similar to that applied to airplanes, except that stripes will not exceed 5 feet in length or 18 inches in width. If there is more than one rudder, only the outboard side of each outboard rudder will be marked.

4. One of these insignia will be placed on top and one on bottom of envelope of captive balloon, the center of each insignia being at the intersection of a vertical plane through the longitudinal axis with a vertical plane through the greatest diameter of the envelope. The red circumscribed circle will be 5 feet in diameter.

5. For United States Navy free balloons there will be two distinguishing insignia 5 feet in diameter to be placed on the envelope, one at each end of a diameter which is inclined 45° to the vertical axis of the balloon.

6. The designating number of each airplane and dirigible will be placed in figures 3 inches high on each side of the rudder, at the top of the white band hereinbefore mentioned.

7. The designating number, both in the case of free balloons and captive balloons, will be placed on the envelope just below or just abaft the lower distinguishing insignia, the letter and figures to be black, 3 inches high and 3 inches below insignia. In case the color of the envelope is such that black figures are not readily distinguishable, there will be a white background with 1 inch margin about the designating number.

8. All naval aircraft will be immediately marked in accordance with this order, and in future, specifications for naval aircraft will require that the contractors place the building number and distinguishing insignia on all aircraft, and on such spare parts as bear these marks in completed aircraft.

PAINTING, INTERIOR OF HULL OF AIRCRAFT.

The interior of the hull shall be given a thin but complete coat of inside white while under construction and all faying surfaces shall receive a similar coat just before final assembly. All coats shall be as thin as practicable to serve the purpose, and when repainting is required all old paint shall first be removed and the surface thoroughly dried and sandpapered before recoating.

25. Fuel Barges and Ash Lighters. (a) *Coal Barges and Ash Lighters.*—All inside plating in compartments in general shall be given one coat of bituminous solution and one coat of bituminous cement or enamel, applied as stated in paragraph 30, or may be painted with such coats of red lead as the bureau may direct; hold compartments which may be used for the carrying of fuel oil shall be given the bituminous compositions described above. The outside of metal coal barges shall be treated in the same manner as described in paragraphs 5, 14 and 20, except that the hull above the normal water-line including flashboards and house, if any, shall be painted black (formula No. 13). The exposed metal deck of coal barges shall be painted black (formula No. 52). Wooden coal barges above the copper line, including flashboards, shall be painted black. Interior woodwork shall be thoroughly whitewashed, but not painted.

(b) *Fuel-Oil Barges.*—Outside shall be painted as described above for coal barges and ash lighters. Interior of fuel-oil compartments shall be coated as required by paragraph 29 (c).

26. Ammunition Lighters.—Inside of outer plating, framing and all connections thereto, underside of inner bottom plating, floor plates and the interior generally, except as noted below, shall be coated with bituminous solution and enamel or cement, applied as directed in paragraph 30. Sides and top of cargo space to be given not less than two coats of inside white (formula No. 27) in order to provide as much light as

possible. Exterior shall be painted as specified in paragraph 13; deck erections shall be painted spar color.

27. Water Barges.—Interior of water barges shall be coated with bituminous compositions, applied as stated in paragraph 30. Exterior shall be painted as specified in paragraph 13. Interiors of deck houses shall be painted inside white.

INSIDE PAINTING.

28. Metal Work Generally.—(a) A priming coat of red lead shall be applied to all metal surfaces inside of the hull, except as otherwise specified, in the same manner as that described in paragraphs 4, 7 and 29. Over this priming coat an additional complete coat of priming paint, red lead, green or white, as specifically required hereinafter, will be applied, and the spaces finished in two or more coats of paint as described for the particular spaces or surfaces.

(b) *Galvanized and Brass Work.*—Bright brass work in the interior of the vessel, in general, shall not be painted, but on vessels painted light gray all brass work which is or which may become visible from the outside shall also be painted light gray. Piping, etc., in the interior of the vessel shall be painted as specified in detail herein. Galvanized fittings shall be left bright.

On galvanized work such as ventilation ducts, sheathing in officers' and crew's compartments, partitions in wash room and water closet spaces, etc., the two priming coats of paint may be omitted, provided sufficient finishing coats, not less than two coats, are applied to give the finish desired, unless otherwise directed by the superintending constructor.

29. Compartments.—(a) Compartments subject to test for water-tightness, which are afterwards to be painted, may be given one coat of an approved oil paint before testing; such tests are not to be made until the paint is thoroughly dry. This coat of paint need not be removed after testing, but, if in good condition, it will be considered as the priming coat of

paint required; it must be thoroughly dry before any additional coats of paint are applied over it.

(b) Compartments subject to test, which are afterwards to be cemented or coated with bituminous compositions, shall not be painted or otherwise coated until after the test, except that the metal may be protected from corrosion up to the time of test by the application of an approved oil or varnish. After having passed a satisfactory test the metal shall be cleaned, etc., as required by paragraphs 4 and 30, before any cement or bituminous composition is applied.

(c) Oil tanks and compartments for the stowage of fuel oil, in general, shall not be painted. During the construction of the vessel the interior of fuel-oil tanks proper shall be wire brushed and thoroughly coated with an approved non-volatile oil. The interior of compartments not fuel-oil proper, but made oil-tight for the purpose of the possible carrying of oil at some future date, shall not be painted until after having passed a satisfactory test; they shall then receive a priming coat of red lead, touched up as necessary from time to time, to properly protect the metal, and finally finished with at least one complete coat of red lead. During the construction of these compartments and prior to test a coat of an approved non-volatile oil may be applied as a preservative and to prevent corrosion of the metal, but when the compartments are ready to receive the priming coat of red lead the metal shall be in the condition described in paragraph 4 before the red lead is applied.

Double-bottom compartments not assigned as feed-water tanks or fuel-oil tanks shall be painted with the priming coat of red lead and the priming coat of white lead, both of which are referred to in paragraph 28 (a); in addition, these compartments shall be given one thorough coat of inside white (formula No. 28).

(d) Compartments not subject to test, after thorough cleaning, will be given a priming coat of red lead (formula No. 26)

and kept in good condition by such touching up as may be necessary to present a complete intact hard and dry coat prior to final painting. In confined spaces, when agreed upon by the contractor and the superintending constructor, a coat of white paint (formula No. 28) may be applied to give light for working, and this coat of paint, if in good condition at the time for final painting, will be considered as the second priming coat of paint to be applied to these spaces.

(e) Paint, cement and bituminous compositions shall be applied, if practicable, while the vessel is out of water. If not practicable, dry air or other approved means of obtaining proper conditions for painting, satisfactory to the superintending constructor, shall be employed.

(f) All inside compartments and work not finished in white, color or cork, not oil tanks, or not coated with Portland cement, bituminous compositions, oil or enamel, or not galvanized, and not particularly specified herein, shall be given the priming coat of red lead and touching up referred to in paragraph 7, and shall be finished in at least two coats of red lead (formula No. 26).

On destroyers, and other vessels of light construction, where the metal surfaces of reserve feed-water tanks, trimming tanks, water tanks, fire and engine room bilges, etc., are galvanized, and the galvanizing forms an intact coating, the plating shall be left bare, except at rivet heads or points and at plate edges not galvanized, over which shall be applied red lead or other approved composition.

On destroyers the galvanized steel plating, angles, etc., of the cofferdam spaces between fuel-oil tanks and machinery spaces shall not be painted, provided the galvanizing is intact. Rivet heads and all plate edges shall, however, be touched up as necessary with red lead.

(g) In general, the quantity of paint applied shall be the minimum required to properly preserve the metal, and final coats of paint shall be begun at a time before the delivery of

the vessel to the government, sufficient to insure that the paint has been properly applied and that the work is in perfect condition when the vessel is delivered.

The contractors shall prepare and submit for approval within one year from the date of the contract a schedule of painting showing the approximate dates on which painting will be begun and the approximate interval between the different coats. Any variation from these requirements which may be necessitated by existing conditions shall be arranged by mutual agreement between the contractors and the superintending constructor, subject to the approval of the bureau.

30. Bituminous Compositions.—(a) The following spaces on all vessels (except over galvanized plating of destroyers or on vessels of special light construction) shall be coated with approved bituminous solution and cement or enamel: Trimming tanks, drainage tanks, reserve feed-water tanks, ship's fresh-water tanks, gravity tanks, coal bunkers, chain lockers, sand lockers, top of inner bottom in engine and boiler rooms, dynamo and dynamo condenser rooms, also the inner surface (including stiffeners, etc.) of bulkheads surrounding the engine and boiler rooms to the height of the floor plates, and all foundations, etc., in these spaces to the same height; connecting passages between machinery spaces, shaft alleys, all closed spaces in foundations, girders and pockets that are inaccessible after completion and at junction of an inclined deck and ship's side; also the inner surface of bulkheads surrounding the dynamo condenser rooms to a height of about 2 feet above the inner bottom and foundation in these spaces to the same height, also interior of battery charging station. Special attention shall be given to the thorough protection of portions of the machinery space which may become difficult of access upon completion. The foregoing shall not substitute bituminous compositions for spaces required hereinafter to be coated or filled with asphalt cement (formula No. 60).

After commissioning, the coal bunkers should be cleaned out, without chipping or scraping, for examination at least once in every three months. If recoating is found to be necessary, such portions as require it should be touched up (when the metal is dry and in proper condition to receive it) with red lead or other approved composition, as the case may be, to conform to the material previously applied in such compartments. The coal bunker spaces, as a whole, shall not be entirely coated, unless such coating is found to be absolutely necessary.

If such coating is found to be necessary the work of preparing the surface should receive the special attention described in paragraph 4 (d).

Fresh-water tanks coated with bituminous solution and enamel shall be thoroughly washed out three times before the delivery of the vessel to the government. In each case they shall be filled with fresh water, allowed to stand not less than six days before being emptied, and the tanks washed. The last washing shall take place not more than 30 days before the delivery of the vessel to the government.

(b) *Application.*—Metal shall be free from paint and thoroughly clean, and, at times of application of any protective coating, surfaces shall be thoroughly dry. One coat of the bituminous solution shall be first applied, well spread out, with a brush. This preliminary coating, necessary with either the enamel or the cement, shall be followed, after drying or at least becoming tacky, by a coat of cement or enamel applied hot; the cement being suitable for flat horizontal surfaces is poured on hot and spread rapidly with a brush or by some equally efficient means to a minimum thickness of $\frac{1}{4}$ inch. (In chain lockers the bottom plating shall be given a coating of asphalt cement 4 inches in thickness unless otherwise directed by the superintending constructor.) The enamel applied hot being suitable for overhead and vertical or inclined surfaces

where the cement cannot be used, shall be applied to a minimum thickness of $\frac{1}{16}$ inch. Bulkhead bounding angles, boiler foundations, and other metal work projecting through the cement shall have the bituminous cement poured along the lower edge in order to completely coat the angle.

(c) Artificial ventilation shall be furnished while any bituminous coating is being applied.

The bureau has added to the type allowance lists the following quantities of bituminous compositions, which are to be used by the ships forces only, for minor repairs and patching in the compartments coated with these compositions:

Vessels from 18,000 tons upward.

Bituminous enamel, 200-pound kegs.....600 lbs.
Bituminous solution, 2-gallon cans..... 6 gals.

In order that information may be available as to the proper method of application the following instructions are issued:

Bituminous compositions are furnished in three grades: First, a solution to be used as a priming coat; second, an enamel to be used as a coating for vertical and overhead surfaces; and, third, a cement which is to be used as a coating for horizontal surfaces.

The solution will dry in the open air in about two hours, and in confined spaces the drying time is somewhat lengthened. Blowing air through the confined spaces naturally accelerates the drying of this composition. The solution is applied cold on all surfaces—vertical, floor and overhead—and acts as a primer for the enamel and cement. In order to obtain satisfactory results the solution must be applied on a clean, dry surface, free from oil, grease, moisture, or loose rust. This surface, after the solution has been applied, must be kept absolutely free from the foregoing substances in order to have the coating of enamel or cement adhere properly to the surface.

The bituminous enamel is hard and tough composition when cold, resembling pitch.

It is necessary to heat the enamel to about 400° Fahrenheit before applying. In boiling this enamel it should be brought to a temperature short of the boiling point, as otherwise it will burn the brushes during application, and also the enamel is likely to boil over. If too hot there is found to be too much smoke coming from the enamel, which will not permit of its proper application. The enamel is applied hot with a brush similar to a shoe dauber, with a much longer handle. New bristle brushes are not satisfactory, as the heat will burn the bristles and destroy the brushes. The enamel is applied to vertical and overhead surfaces and to a depth of approximately $\frac{1}{16}$ inch to $\frac{1}{8}$ inch.

The cement is manufactured of the same constituents as the enamel, with the addition of more Portland cement. The cement is used on floor spaces only and is generally run on from a convenient vessel in a heated condition. The boiling of this cement is done in the same manner as outlined for the enamel, and the cement is applied to a thickness of approximately $\frac{1}{2}$ inch. It is of great importance that the material be not burnt or "cooked," as such process would render it very brittle after cooling; this condition would result in the material cracking or flaking off.

The success of bituminous compositions depends primarily upon the care taken in their application, and particularly on having a clean surface to begin with, keeping the surface of the solution clean after it has been applied before the application of enamel or cement. In every case where the enamel or cement is used a priming coat of the solution must be applied. It is not necessary that the coating of the solution be absolutely dry before applying the enamel or cement, provided the solution has dried to a tacky condition.

31. Protective Decks.—Before riveting, the upper surface of the lower course and under surface of upper course, and both surfaces of intermediate courses of protective deck plating or

other structure plated in two or more courses, shall be thoroughly painted with red lead, and, after the courses have been riveted together, red-lead putty shall be pumped between the courses until all cavities have been filled. Vent holes shall be drilled as directed to show that the injected red-lead putty has been thoroughly distributed.

32. Finish in Inside White, with Dado (Machinery Spaces).—The top and sides of the following spaces shall be given a priming coat of white paint as required by paragraph 28 and shall be finished with at least two coats of inside white (formula No. 27); sides to have dado of brown metallic paint with a 1-inch stripe of black paint at top.

Engine rooms, dado 36 inches above engine room floor plates.

Boiler rooms and narrow passages in machinery spaces, dado 48 inches above floor plates, and a 24-inch dado or border around doors to coal bunkers.

Evaporator rooms,
Condenser rooms,
Ice-machine rooms,
All inclosed workshops, except blacksmith's shop, coppersmith's shop, and foundry. (See paragraph 37.)
Air-compressor rooms,
Steering-engine rooms,
Anchor-engine room,
Shaft alleys.
} Dado 24 inches above floor plate or deck.

Stanchions in the above spaces, inside white, with dado same height as required for space.

33. Finish in Plain Inside White, not Glossed.—The top and sides of the interiors of the following spaces shall be given a priming coat of white paint as required by paragraph 28 and shall be finished in two or more coats of white, not glossed (formula No. 27):

Ammunition spaces including handling rooms.
Band rooms.
All lockers and racks except clothes lockers.
Blower rooms below protective deck.
*All storerooms and issuing rooms (see note below).

NOTE.—Magazines (also top of cork insulation on decks, except under linoleum in walking space), storerooms and spaces little frequented shall be repainted as necessary for protection only, and not for appearance.

Crew's quarters except as specially noted to the contrary.
Chief petty officers', servants' and other wash rooms and shower spaces and water closets.
Galley and other commissary spaces except butcher shop. See paragraph 34.
Barbettes and turrets.
Hammock berthing.
Skylights, trunks generally and hatch coamings, except in officers' quarters, which are to be glossed green.
(Any surfaces showing from exterior shall be light gray on light gray ships, the light gray to extend generally from top of coaming to deck.)
Lamp room.
Laundry.
Paint and oil rooms.
Printing office.
Prisons.
Ship's fresh-water tank spaces.
Steering-gear rooms.
Torpedo rooms.
Windlass house.
Wing passages and compartments.
Equalizing compartments.
Passages and framing behind armor.

* Holds and spaces included between sloping and flat deck, above shall be finished in two coats of red (formula No. 1).

34. Finish in White, Glossed.—(a) Top and sides of the interiors of the following spaces shall be finished in white and glossed:

Staterooms for master-at-arms and sergeant of marines.
Chief petty officers' mess rooms and quarters.
Officers' water closets and bath and shower spaces.
Chart house.
Conning-tower.
Fire-control tower.
Torpedo-directing station.
Emergency cabins.
Radio room.
Armory.
All pantries.
All offices.
Dispensary,
Prophylactic room,
Surgeon's examining room,
Operating room,
Sick-bay bathroom,
} And all metal fittings and other work not finished bright.
Metal scuttle butts.
Clothes lockers.
Butcher shop.
Crew's reception and reading room and retiring room attached thereto.

(b) The above surfaces shall first be given two coats of inside white (formula No. 27), (one of which is the second priming coat, over the priming coat required by paragraph 29 (d), then one coat of flat white (formula No. 29), and finished with one coat of white enamel (formula No. 30). If the paint work is in fair condition, one coat of inside white (formula No. 27), one coat of flat white (formula No. 29), and one coat of white enamel (formula No. 20) will be sufficient.

35. Finish in Green, Glossed.—(a) In general, with exceptions noted in paragraph 28, subparagraph (b), the sick-bay and isolation ward, admiral's and captain's quarters, wardroom, junior and warrant officers' staterooms, dining rooms, and country adjacent shall be finished in light green, glossed in accordance with formula No. 34.

(b) Over the priming coat required by paragraph 29 (d) shall be applied one coat of priming green (formula No. 31), then one coat of flat green (formula No. 32), and then one coat of green enamel (formula No. 34). New work will require two coats of priming green in lieu of one coat specified above.

On light plating of destroyers, a fine stipple finish may be applied, if desired.

36. Green to Prevent Glare.—In *chart houses* used as *steering stations* and in *pilot house* of tugboats the underside of roof and underside of screen over windows shall be painted green; also the entire surface in *dynamo room, switchboard room* and *central stations* shall be painted priming green (formula No. 31) to prevent glare.

37. Finish in Light Gray.—Interiors of blacksmith shops, coppersmith's shop and foundries, floor of tops, platforms, tops of deck houses when covered with canvas and under gratings in hammock berthing shall be painted light gray (formula No. 133-N).

38. Cork Painting.—Cork paint shall be applied only to such interior surfaces in living quarters, storerooms, magazines, etc., as are directly exposed to chilling by conduction through metal from the action of wind or water, or where sweating would occur due to opposite extremes in temperature. The surfaces to be thus coated and their location are largely dependent upon the design of the vessel and to the above contingent conditions. In general, the surfaces to be thus coated shall include: Interior surface of shell and deck plating, and framing connected thereto, covered by ceiling; interior surface

of shell plating and framing connected thereto, in storerooms (not including coal bunkers) and in living spaces not behind armor; surface of bulkheads, including framing, between storerooms, and water tanks; unexposed surface of ceiling and scupper pipes. The cork paint shall be applied as follows: For all surfaces, except ceiling and insulation, the surface of the metal, in addition to the priming coat required by paragraph 29 (d) applied, shall be given a thick coat of "under cork" or cork size (formula No. 51). The ground cork, which should be fairly large grained (large enough to pass through a No. 8 sieve and be held on a No. 12 sieve), shall then be sifted and applied and left until the paint is thoroughly hard and dry. Over this shall be applied two or more coats of inside white (formula No. 27), except the unexposed side of insulation. No inboard surface of metal ceiling shall be cork painted. Cork painting shall be limited to the minimum absolutely required to prevent excessive sweating, but where, for instance, a part of the deck overhead would require to be cork painted, the remainder of the deck, if of metal, within the same compartment shall be so painted in order to obtain a uniform appearance. In a compartment generally finished in gloss the cork paint shall also be glossed. Ground cork can be put on with pneumatic machines or pressed on by hand.

39. Wash Strakes.—In general a wash strake extending in width to the top of the bounding angle shall be painted either the same color as the floor covering in the vicinity or with red boot topping paint (formula No. 2).

40. Joiner Doors.—Joiner doors, when of wood, shall be painted to correspond with adjacent painting either green or white, glossed, except fixed blinds, which shall be finished bright. Metal doors in spaces in which the furniture is grained mahogany shall match the furniture, and all other metal doors shall match the bulkheads.

41. Metal Behind Joiner Work.—Metal work in way of built-in joiner work or casings shall be thoroughly painted with two coats of red lead before the latter is fitted.

42. Joiner Work.—Joiner work which is to be painted shall be treated in the same manner as the metal work in the vicinity, except that the priming coats shall be of inside white (formula No. 27) when the finish is white, and light gray (formula No. 57) when the finish is light gray. All wood must be thoroughly dry before applying any paint. Battens in hold and slat gratings in hammock berthing shall be painted light gray (formula No. 133-N).

43. Softwoods, Hardwoods and Graining.—(a) Softwoods shall be painted with at least three coats of oil paint, the finishd color to match the metal work in the vicinity, or shall be shellacked, oiled or varnished, as directed. If knots or discolored portions exist they shall be given one coat of shellac before paint is applied. When the surface of hardwood is not to be painted for some time, one coat of linseed oil shall be applied. Hardwood gratings shall be oiled. Other joiner work shall be finished as specified hereinafter. Graining shall be done as directed by the bureau. All woodwork must be thoroughly dry before paint, varnish, etc., is applied; each coat must be thoroughly dry before the next is applied; all finished work must show firm adherence and uniform appearance. Hardwoods shall be filled, shellacked, and varnished and polished as follows:

(b) *Filling New Work (Exposed to Weather).*—New work must be perfectly smooth before filler is applied. Stain the filler to desired color. The following pigments used for different varieties of wood: Oak, burnt umber and raw sienna; mahogany, burnt sienna, carriage, part lake and burnt umber; ash, burnt and raw umber. Apply filler with a brush, and when set rub down with excelsior or waste; allow it to dry 24 hours, after which remove grit with No. 00 sandpaper, then

dust off and apply one coat of clear shellac; putty (color of filler) shall be used where necessary. When shellac and putty have dried, rub surface with No. 00 sandpaper, dust off, and apply first coat of spar varnish; when this has become thoroughly dry (at least 6 days required), rub down with No. 00 sandpaper, then dust off and apply second coat of spar varnish; third coat shall be applied if directed.

(c) *Furniture, Interior Work, etc.*—Fill, shellac and varnish as for outside work (use interior varnish). Grade "A" shellac shall be used (formula No. 56). Three coats of varnish to be applied, allowing at least three days to intervene between successive coats. For a dull finish, rub with pumice stone and water, then wash off and dry surface with damp chamois skin. For a gloss finish, rub with pumice stone and crude oil, wipe and rub surface with rotten stone and crude oil, then clean with crude oil, eight parts, petroleum spirits, one part, finishing with cheesecloth or clean waste.

(d) *Refinishing Old Work.*—If in fair condition, wash surface with weak solution of ammonia to remove grease, etc., then rub with No. 00 sandpaper; this being accomplished, dust off and apply one coat of interior or spar varnish as nature of work requires. If necessary, remove old varnish with remover, wash off with benzine, remove dark spots, etc., with oxalic acid; when dry, sandpaper and proceed as with new work.

44. Metal Furniture.—Metal furniture shall be in strict accordance with the latest specifications issued by the Navy Department, obtainable from the Bureau of Supplies and Accounts.

In the care of metal furniture the following formula for metal furniture polish may be used:

Metal Polish (Proportions are by Volume).

Sweet oil	25 per cent.
Oil cedar leaf	25 per cent.
Crude petroleum oil	25 per cent.
Benzine	25 per cent.

Shake well before using. Apply by moistening a piece of cheesecloth with the mixture, and rub down with a dry piece of cheesecloth.

45. Uniform Cases.—Outside of uniform cases, when fitted, shall be enameled the same color as metal furniture when same is supplied, otherwise to be finished in maroon.

46. Metal Surfaces Under Linoleum, Gratings, etc.—Metal surfaces on which linoleum is to be laid must be perfectly smooth, clean and dry before the floor covering is put down, all recesses or rough spaces being filled in with red smoothing cement (formula No. 63). It is considered the best practice to cover thoroughly both the deck plating and the underside of the floor covering with linoleum cement (formula No. 61), in order that firm adherence may be assured.

Laying linoleum requires the following procedure: The linoleum shall first be "treated" by laying it face down in a passage way where much traffic will pass over it. This stretches the linoleum so that it will not stretch after laying it in place. Cut the linoleum to size, allowing about $\frac{3}{16}$-inch seam space. The strip of linoleum should be rolled up and placed at one end of the stretch of deck to be covered. Apply cement to the deck and to the under side of the linoleum on the roll. When the cement shows slight "tackiness" unroll it on the portion of the deck that has been coated with cement. Weight down the linoleum immediately by laying on sand bags. Sand bags should lay on at least 48 hours. Cans of cement should not be left open because it is quite volatile. Cans with greater capacity than two gallons should not be used for holding cement.

Metal surfaces on which gratings or solid wood shutters are to be laid except surface, already designated as light gray shall be thoroughly coated with red-lead paint.

47. Wood Decks.—In laying planking on metal decks, one priming coat of red lead (formula No. 1) shall first be applied to the upper surface of the deck plating. After this has thoroughly dried, a thick, heavy, red-lead paint shall be applied to the deck as each plank is being laid, sufficient to fill efficiently all interstices between deck planking and plating underneath. Where exposed the underside of planking shall be covered with priming coats of white lead in oil during the building of the vessel, and shall be painted before the delivery of the vessel to the government the same color and finish as the metal work in the vicinity. The upper surface of the planking shall be thoroughly protected during the building of the vessel by a thick coat of crude turpentine, cheap grade of Georgia pine pitch, or other approved material, well sprinkled with sawdust, and renewed as often as necessary to maintain a thoroughly efficient protection. After final planing the upper surface of the planking shall be cleaned where necessary. If not going directly into commission, the planking shall be coated with turpentine, pine and pitch, as described above.

48. Decks—Covering Not Specified.—Steel decks not provided with any special form of deck covering shall be given two coats of red lead; plating in dynamo rooms, air-compressor rooms, ice-machine rooms, steering-engine rooms, evaporator room, workshops, etc., shall be covered with two coats of red lead or with two coats of black paint (formula No. 52.)

49. Whitewash.—Whitewash or similar compositions shall never be applied to any metal portions of a vessel.

50. Standard Coloring for Piping.—All voice pipes shall be painted the shade and color of the ship in the vicinity. The body color of all pipes or pipe covering, exclusive of pneumatic piping, which shall be painted in its distinctive color throughout, shall conform in shade and color to that of the ship in the vicinity, except on edges and side of flanges, where the dis-

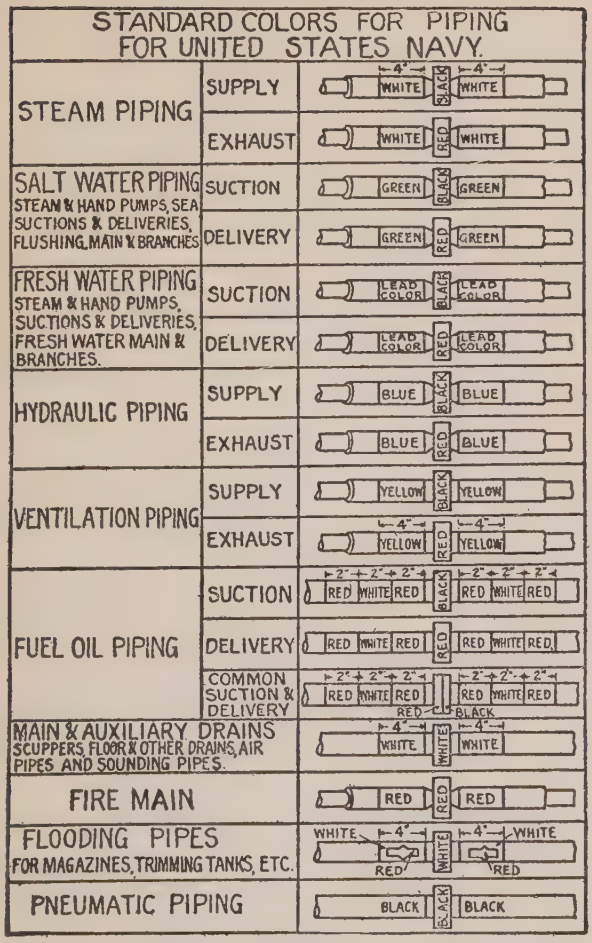
STANDARD COLORS FOR PIPING
FOR UNITED STATES NAVY.
STEAM PIPING
SUPPLY
WHITE
BLACK
WHITE
EXHAUST
WHITE
RED
WHITE
SALT WATER PIPING
STEAM & HAND PUMPS, SEA SUCTIONS & DELIVERIES, FLUSHING, MAIN & BRANCHES
SUCTION
GREEN
BLACK
GREEN
DELIVERY
GREEN
RED
GREEN
FRESH WATER PIPING
STEAM & HAND PUMPS, SUCTIONS & DELIVERIES, FRESH WATER MAIN & BRANCHES.
SUCTION
LEAD COLOR
BLACK
LEAD COLOR
DELIVERY
LEAD COLOR
RED
LEAD COLOR
HYDRAULIC PIPING
SUPPLY
BLUE
BLACK
BLUE
EXHAUST
BLUE
RED
BLUE
VENTILATION PIPING
SUPPLY
YELLOW
BLACK
YELLOW
EXHAUST
YELLOW
RED
YELLOW
FUEL OIL PIPING
SUCTION
RED WHITE RED
BLACK
RED WHITE RED
DELIVERY
RED WHITE RED
RED
RED WHITE RED
COMMON SUCTION & DELIVERY
RED WHITE RED
RED
BLACK
RED WHITE RED
MAIN & AUXILIARY DRAINS
SCUPPERS, FLOOR & OTHER DRAINS, AIR PIPES AND SOUNDING PIPES.
WHITE
WHITE
WHITE
FIRE MAIN
RED
RED
RED
FLOODING PIPES
FOR MAGAZINES, TRIMMING TANKS, ETC.
WHITE
WHITE
WHITE
RED
RED
PNEUMATIC PIPING
BLACK
BLACK
BLACK

FIG. 123.

tinctive colors shown in the following sketch shall be painted. The edges of flanges of fuel-oil pipes, down to the tank, when no manifold is fitted, shall be painted the same color as delivery pipes, *i. e.*, red. Where a pipe has no flanges, the couplings and elbows shall be painted as per standard at flanges. Where a pipe has neither flanges nor couplings, a circumferential band, or bands, containing the distinctive colors, shall be painted at suitable intervals. No compartment shall be left with pipes unmarked.

NOTE.—Piping for carbon dioxide fire extinguishing system to be painted as follows: Flanges black; two inches each side of flanges white; six inches each side of white stripe to be painted black; remainder of piping in any one compartment to be painted the same color as that of compartment.

CEMENTING.

51. Portland Cement.—(a) The Portland cement used shall comply with the latest specifications issued by the Navy Department, obtainable from the Bureau of Supplies and Accounts, as to chemical analysis, firmness, setting qualities, etc. Samples will be taken from time to time for analysis and test, for compliance therewith.

(b) *Sand.*—The sand used shall be clean and sharp and shall be such as to pass through a No. 20 sand sieve, 0.0335-inch openings, and retained on a No. 30 sieve, 0.0223-inch openings; the Nos. 20 and 30 sieve to conform to the standard sieve specifications of the Bureau of Standards, Department of Commerce. Sand having passed the No. 20 sieve shall be considered standard when not more than 2 grams pass the No. 30 sieve after one minute continuous sifting of a 200-gram sample.

(c) *Coke.*—In confined spaces where filling has a depth over 3 inches, coke crushed to small size shall be used.

(d) *Mixing Portland Cement Mortar.*—In mixing the Portland cement, one part of cement and two parts of sand

shall be used for the filling coat. This is to be mixed in small quantities to prevent setting prior to application, and in general should be mixed as wet as can be worked under the trowel.

(e) *Application of Cement.*—No cement is to be applied until compartments are completed and tested satisfactorily for water-tightness. Wherever cement is used on iron or steel the surface of the metal must be thoroughly cleaned down to the bare metal, and care shall be taken to clean off all oil, dirt, paint, scale or other foreign matter. Where coke is used, a thin coat of cement mortar, about 1 inch thick, shall be first put on. The space to be protected shall then be filled with fine coke, and a thin mortar mixed as stated in (d) above shall then be poured over it, filling the voids; it shall then be finished with a 1-inch coat of fresh mixed mortar sufficiently stiff to be trowled to a surface. All cement shall be carefully tested to ascertain if it has properly adhered to the metal, and where this is not found to be the case the contractors shall be required to remove the old cement and apply new cement until such adherence takes place.

52. Portland Cement, Quantity Used.—In general the quantity of Portland cement shall be limited to the minimum required for purposes stated in the succeeding paragraphs.

53. Double-Bottom Compartments.—No Portland cement shall be fitted in double-bottom compartments.

54. Cement Under Tiling.—Portland cement shall be used as a base for all tiling, and the minimum total thickness of tiling and cement shall be 2¼ inches. The cement shall be so laid that when a space is tiled water will not collect about bulkheads, stanchions, etc., but will flow freely to the deck drains.

55. Stem and Stern Casting.—Places difficult of access in stern casting around shaft tube and pockets in deck landings

on stern casting shall be filled with coke and cement, as directed in section 51.

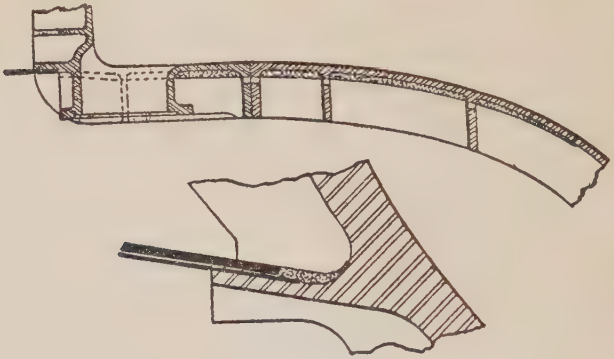

FIG. 124.

56. Corrugated Bulkheads.—The space between bounding angle and corrugated divisional bulkhead shall be filled with Portland or other approved cement.

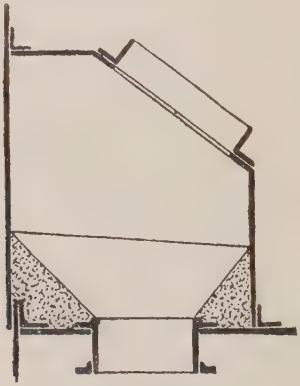

FIG. 125.

57. Seamen's Head.—The pockets of staples shall be filled with Portland cement, and tiled over, if directed.

58. Built-In Ash and Garbage Chutes.—Portland cement shall be laid in to form a funnel-shaped hopper inside the metal structure, to discharge the refuge therefrom; or, when fitted with a metal funnel hopper inside of a hammock berthing, the pocket formed behind the plates shall be filled in with either Portland cement or asphalt cement.

59. Asphalt Cement.—Asphalt cement, in accordance with formula No. 60, shall be used on all vessels to completely fill in the spaces subject to vibration, such as between shell and shaft tube (see sketch below). The surface of the metal shall be first thoroughly cleaned and a coat of asphalt priming applied (formula No. 58). The asphalt cement covering of the bottom plating of chain lockers shall be about 4 inches in thickness.

60. Hawse Pipes.—Inside of the bolster of the hawse pipe shall be filled with asphalt cement in accordance with formula No. 60.

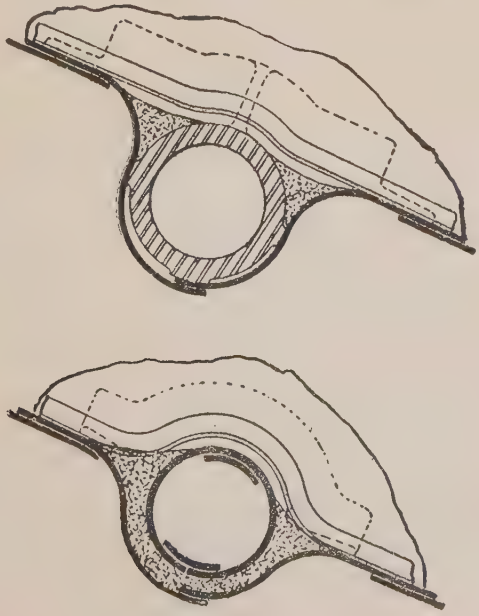

FIG. 126.

61. Precautions Against Lead Poisoning.—(a) In applying the lead paints to spaces herein enumerated, the latest instructions of the Bureau of Medicine and Surgery as to precautions to be taken shall be strictly adhered to at navy yards and on vessels in commission. For information the following excerpt is quoted from circular letter of the Bureau of Medicine and Surgery No. N. M. S. 124713, dated March 23, 1912:

"*Prophylaxis.*—Men working in compartments containing lead-laden dust should wear some type of respiratory mask, and care should be taken that they do not become fatigued, a condition which predisposes to lead poisoning. Alcoholics are particularly susceptible to lead poisoning and in particular to lead encephalopathy. In all forms of employment with lead a full meal should always be taken before commencing work. Thorough washing of hands and face before eating should be insisted upon, as well as bathing of entire body daily. Chewing of tobacco while working with lead should be prohibited. The taking of tablets of sodium hyposulphite is to be recommended during the continuance of work with lead. About five 5-grain tablets may be taken daily. The wearing of gloves during the process of handling, grinding or mixing lead paints is of great value in preventing poisoning. Clothing that is tight fitting at wrists and neck affords additional protection; cuts and abrasions should be protected until healed. When a workman complains of symptoms of lead poisoning he should be directed to report to the surgeon for observation, and should the diagnosis be affirmative he should be removed from further contact with the source of poisoning.

"As regards treatment, it should always be borne in mind that potassium iodide should be used with caution in cases of acute poisoning, as lead deposited in the tissues may be redissolved and intensify the existing condition."

(b) All compartments herein prescribed for bituminous solutions, enamels, cements, or paints must be thoroughly

ventilated while coatings or paints are being applied, in order to protect the workmen from obnoxious fumes. When applying lead paints in compartments a provision should be made by compressed air or otherwise to blow out lead particles in order to prevent lead poisoning.

62. Approximate Area Covered and Weight of One Gallon of Paint.—The weights per gallon of paint and approximate area covered, as given in Tables 100 to 103, are intended to be approximate only, these figures being dependent to a certain degree upon the materials used and the kind and condition of the surface to which the paint is applied.

Table 100.—Outside Paints.

Formula No.	Material.	Weight per gallon.	Covering power.	Ingredients.	1 gallon.
			Sq. yds.		
1	Red lead	25 lbs. 4 ozs....	56	Red lead, dry	20 lbs.
				Raw linseed oil.....	5 pts.
				Petroleum spirits ...	2 gills.
				Drier	2 gills.
2	Boot-topping, red	9 lbs. 10 ozs....	45	Venetian red, dry...	2 lbs. 14½ ozs.
				Mixing varnish	4 pts. 1 gill.
				Drier	8¾ gills.
				Petroleum spirits ...	3½ gills.
4	Boot-topping, slate color.	9 lbs. 12 ozs....	76	White zinc, dry .:....	3 lbs.
				Lampblack, in oil....	3 ozs.
				Mixing varnish	3 pts. 2 gills.
				Petroleum spirits	2 pts.
				Drier	2 pts.
6	Outside white ...	17 lbs. 4 ozs....	54	White lead, in oil...	5 lbs.
				White zinc, in oil...	9 lbs.
				Raw linseed oil.....	3 pts.
				Petroleum spirits ...	3 gills.
				Drier	2 gills.
				Ultramarine blue ...	$\frac{1}{32}$ oz.
7	Spar color	18 lbs. 11 ozs...	55	White lead, in oil...	14 lbs.
				Yellow ocher, in oil.	1 lb. 6 ozs.
				Venetian red, in oil.	$\frac{8}{16}$ oz.
				Raw linseed oil.....	3 pts. 1 gill.
				Petroleum spirits....	3⅜ gills.
				Drier	1½ gills.
8	Spar color for smokestacks (silica paint). Can be used on smokestacks alternately hot and cold.	20 lbs. 10 ozs...	37	Silica, dry	2 lbs.
				White lead, in oil...	6 lbs.
				White lead, dry.....	6 lbs.
				Yellow ocher, in oil..	1 lb. 4 ozs.
				Litharge	1 lb. 4 ozs.
				Boiled oil	10 gills.
				Petroleum spirits ...	8 gills.
				Venetian red, dry....	1 oz.
9	Spar color for smokestacks. Suitable for smokestacks continually warm, but not suitable for stacks which are cold most of the time.	12 lbs.	40	Spanish whiting	4 lbs.
				Portland cement	13 ozs.
				Yellow ocher, in oil..	1 lb. 3 ozs.
				Venetian red, in oil..	1 oz.
				Kerosene oil	6 pts. 2 gills.
10	Slate color for smokestacks.	13 lbs.	53	White lead, dry.....	4 lbs. 13 ozs.
				White zinc, dry.....	1 lb. 14 ozs.
				Lampblack, dry	5¾ ozs.
				Litharge	5⅜ ozs.
				Mineral oil (kerosene)	2 qts.
				Drier	2½ gills.
				Damar varnish	1 qt.

Table 100.—Outside Paints.—Continued.

Formula No.	Material.	Weight per gallon.	Covering power.	Ingredients.	1 gallon.
			Sq. yds.		
11	Outside brown ..	17 lbs. 4 ozs....	50	White lead, in oil....	10 lbs.
				Burnt sienna, in oil..	3 lbs.
				Burnt umber, in oil..	8 ozs.
				Indian red, in oil....	4 ozs.
				Raw linseed oil.....	3 pts.
				Petroleum spirits ...	3 gills.
				Drier	2 gills.
12	Hospital ship green.	11 lbs. 8 ozs....	....	Chrome green, in oil	7 lbs. 9½ ozs.
				Raw linseed oil.....	5 pts. 2 gills.
				Petroleum spirits ...	$3\frac{5}{16}$ gills.
				Drier	2 gills.
				Spar varnish	½ gill.
13	Outside black ..	8 lbs. 4 ozs.....	53	Lampblack, in oil....	3 lbs. 12 ozs.
				Raw linseed oil.....	3 pts. 1 gill.
				Petroleum spirits ...	3 gills.
				Drier	3½ gills.
14	Anticorrosive ship-bottom paint (Norfolk No. 17).	11 lbs. 8 ozs....	30	Grain alcohol	3 qts.
				Gum shellac, grade A	13 ozs.
				Turpentine	2 gills.
				Pine-tar oil	2 gills.
				Metallic zinc, dry....	1 lb.
				White zinc oxide, dry	3 lbs.
15	Antifouling ship-bottom paint (Norfolk No. 19).	10 lbs. 8 ozs....	27	Grain alcohol	4 pts. 3 gills.
				Gum shellac, grade A	1 lb. 8 ozs.
				Pine-tar oil	3 gills.
				Turpentine	3 gills.
				White zinc oxide, dry	1 lb. 8 ozs.
				Indian red	1 lb. 8 ozs.
				Red oxide of mercury, dry.	12 ozs.
102-N	Outside white ...	16 lbs.	54	White zinc, in oil....	5 lbs.
				Sulphate of lead, in oil.	5 lbs.
				Barytese, in oil.....	1 lb. 3 ozs.
				Asbestine, in oil.....	10 ozs.
				Raw linseed oil.....	3 pts.
				Petroleum spirits	¾ pts.
				Paint dryer	2 gills.
104-Na	Ready mixed red lead.	18½ lbs.	56	Red lead, dry.....	8½ lbs.
				Silica	4 lbs.
				Raw linseed oil.....	5 pts.
				Petroleum spirits ...	2 gills.
				Paint drier	2 gills.
107-Na	Red deck paint..	9½ lbs.	35	Portland cement	¾ lb.
				Red lead, dry.....	¾ lb.
				Indian red, dry.....	$3\frac{7}{8}$ lbs.
				Spar varnish	3 pts.
				Japan drier	1 qt.
				Asphaltum varnish ..	1 qt.

Table 100.—Outside Paints.—Continued.

Formula No.	Material.	Weight per gallon.	Covering power.	Ingredients.	1 gallon.
			Sq. yds.		
116-N	Black smokestack	.....		Lampblack, dry	6 ozs.
				Spar varnish	5 pts.
				Turpentine	2 gills.
				Japan drier	1 qt.
117-N	Coal tar paint...	13 lbs.	30	Coal tar	6½ pts.
				Kerosene	1 pt.
				Portland cement	4½ lbs.
133-Na	Standard light gray.	12 lbs.	53	Blanc fixe, dry	3 5/16 lbs.
				White zinc, dry.....	3 7/16 lbs.
				Graphite	3/8 lb.[1]
				Lampblack, in oil....	¼ oz.[1]
				Raw linseed oil.....	21½ gills.
				Petroleum spirits ...	3 gills.
				Paint drier	2½ gills.
134-N	Light gray boot-topping.	.....		White zinc, dry.....	3 lbs.
				Lampblack, in oil....	½ oz.
				Mixed varnish	½ gal.
				Petroleum spirits ...	¼ gal.
				Paint drier	¼ gal.
				Ultramarine blue, in oil.	⅛ oz.

[1] Quantity varies, depending on tinting strength.

Table 101.—Inside Paints

26	Red lead for confined spaces.	26 lbs. 14 ozs...	40	Red lead, dry.....	20 lbs. 10½ ozs.
				Boiled linseed oil....	6 pts. 1 gill.
27	Inside white	18 lbs.	48	White lead, in oil....	7 lbs.
				White zinc, in oil (American).	7 lbs.
				Raw linseed oil.....	7⅞ gills.
				Petroleum spirits ...	8⅛ gills.
				Drier	1½ gills.
				Ultramarine blue, in oil.	1/12 oz.
28	Inside white for confined spaces.	18 lbs. 10 ozs...	40	White lead, in oil...	14 lbs. 9½ ozs.
				Boiled linseed oil....	5 pts.
29	Flat white	17 lbs. 8 ozs....	60	White zinc, French, in oil.	15 lbs. 4 ozs.
				Petroleum spirits ...	3 pts.
				Damar varnish	½ gill.
				Drier	¼ gill.
				Ultramarine blue, in oil.	1/24 oz.
30	White enamel ...	11 lbs. 1 oz....	60	White zinc, French, in oil.	4 lbs.
				Damar varnish	7 pts.
				Ultramarine blue, in oil.	1/24 oz.

Table 101.—Inside Paints.—Continued.

Formula No.	Material.	Weight per gallon.	Covering power.	Ingredients.	1 gallon.
			Sq. yds.		
31	Priming green ..	18 lbs. 14 ozs...	60	White lead, basic sulphate, in oil.	7 lbs.
				White zinc, in oil (American).	8 lbs.
				Petroleum spirits ...	2 pts.
				Raw linseed oil.....	2 pts.
				Drier	1½ gills.
				Chrome green, in oil	½ oz.
32	Flat green	18 lbs. 2 ozs....	60	White zinc, in oil (American).	11 lbs.
				White lead, basic sulphate, in oil.	4 lbs.
				Petroleum spirits ...	3 pts. 2 gills.
				Drier	1½ gills.
				Chrome green, in oil	½ oz.
33	Cancelled.				
34	Light green enamel.	10 lbs. 3 ozs....	....	White zinc, in oil....	2 lbs. 5½ ozs.
				White lead, basic sulphate, in oil.	13½ ozs.
				Petroleum spirits ...	3 gills.
				Drier	⅛ gill.
				Chrome green, in oil	1/10 oz.
				Damar varnish	6 pts. 1 gill.
35	Metallic brown .	9 lbs.	....	Brown, metallic, in oil.	10 lbs.
				Raw linseed oil.....	11 gills.
				Petroleum spirits ...	4 gills.
				Drier	1 gill.
36	Brown	14 lbs. 3 ozs....	60	Venetian red, dry....	2 lbs.
				Damar varnish	2 qts. 6 gills.
				Turpentine	2 gills.
				Drier	1 qt.

Table 102.—Striping Paints.

37	White	17 lbs.	48	White lead, in oil....	7 lbs.
				White zinc, in oil (American).	7 lbs.
				Raw linseed oil.....	2 pts.
				Petroleum spirits ...	2 pts. ⅛ gill.
				Drier	1½ gills.
				Ultramarine blue, in oil.	⅛ oz.
38	Black	10 lbs. 11 ozs...	48	Lampblack, in oil...	9 lbs.
				Petroleum spirits ...	1 pt.
				Drier	1 pt.

Table 102.—Striping Paints.—Continued.

Formula No.	Material.	Weight per gallon.	Covering power.	Ingredients.	1 gallon.
			Sq. yds.		
39	Green	13 lbs. 10 ozs...	50	Chrome green, in oil	10 lbs. 8 ozs.
				Raw linseed oil.....	9¼ gills.
				Drier	2 gills.
				Petroleum spirits ...	4¾ gills.
40	Red	15 lbs. 7 ozs....	53	Vermilion, dry	13 lbs.
				Raw linseed oil.....	2 qts.
				Petroleum spirits ...	1 pt.
				Drier	2 gills.
41	Lead color	21 lbs. 7 ozs....	70	White lead, in oil...	17 lbs.
				Lampblack, in oil...	1 lb.
				Raw linseed oil.....	7 gills.
				Petroleum spirits ...	7 gills.
				Drier	1 gill.
42	Yellow	13 lbs. 12 ozs...	48	Chrome yellow, in oil.	11 lbs.
				Raw linseed oil.....	2 pts.
				Petroleum spirits ...	1 pt.
				Drier	1 gill.
43	Blue	16 lbs. 4 ozs....	48	Ultramarine blue, in oil.	2 lbs. 10 ozs.
				White lead, in oil...	10 lbs. 10 ozs.
				Raw linseed oil.....	2 pts. 1 gill.
				Petroleum spirits ...	1 pt.
				Drier	2 gills.

Table 103.—Miscellaneous Formulas.

51	Under cork	12 lbs. 5 ozs....	15	Spanish whiting	7 lbs. 5½ ozs.
				Interior varnish	5 pts. 1 gill.
				Raw linseed oil.....	1 gill.
				Drier	1 gill.
52	Black finish for decks of coal barges.	7 lbs. 8 ozs.....	....	Spar varnish	2 qts. 1 pt.
				Lampblack, dry	6 ozs.
				Turpentine	2 gills.
				Drier	1 qt.
53	Clear shellac	7 lbs. 12 ozs....	50	Alcohol (grain)	6 pts. 1 gill.
				Gum shellac, orange, grade B.	2 lbs. 6 ozs.
54	Red shellac	8 lbs. 9 ozs.....	41	Alcohol (grain)	5 pts. 3 gills.
				Gum shellac, orange, grade B.	2 lbs. 13 ozs.
				Venetian red, dry....	1 lb. 12 ozs.
55	Yellow shellac ..	9 lbs.	41	Alcohol (grain)	5 pts. 1 gill.
				Gum shellac, orange, grade B.	2 lbs. 8 ozs.
				Yellow ocher, dry..	2 lbs. 1½ ozs.

Table 103.—Miscellaneous Formulas.—Continued.

Formula No.	Material.	Weight per gallon.	Covering power.	Ingredients.	1 gallon.
			Sq. yds.		
56	Clear shellac for furniture.[1]	8 lbs.	50	Alcohol (grain)	6 pts. 1 gill.
				Gum shellac, orange, grade A.	2 lbs. 6 ozs.
57	Slate-colored priming for boats.	17 lbs. 14 ozs...	45	White lead, in oil..	13 lbs.
				Raw linseed oil.....	3 pts.
				Petroleum spirits ...	2 pts.
				Drier	1 gill.
				Lampblack, in oil....	2 ozs.
58	Asphalt solution [2]	8½ lbs.	40	Trinidad asphalt [2] ..	5 lbs. 8 ozs.
			40	Petroleum spirits [3] ..	2 qts. 1 pt.
106-N	White cold water paint.	.....	....	Zinc oxide, dry	2 lbs.
				Whiting	4 lbs.
				Plaster paris	2 lbs.
				Ultramarine blue, dry	$\frac{1}{16}$ oz.
				Brown glue	2 ozs.
				Water	¾ gal.
					100 pounds.
108-N	Red lead putty..	.....	....	White lead, dry	62 lbs.
				Red lead, dry.....	31 lbs.
				Raw linseed oil.....	5⅝ pts.
				Whiting	1 $\frac{7}{16}$ lbs.
109-N	White putty	.....	....	Whiting	73½ lbs.
				White lead, in oil...	8⅝ lbs.
				Raw linseed oil.....	1 $\frac{1}{16}$ gals.
					1 gallon.
120-N	Walnut stain ...	.....	....	Burnt umber, in oil..	2 lbs.
				Raw linseed oil.....	⅝ gal.
				Petroleum spirits ...	$\frac{1}{16}$ gal.
				Paint drier	$\frac{1}{16}$ gal.
121-N	Light oak stain..	.....	....	Raw sienna, in oil...	3½ lbs.
				Burnt umber, in oil..	½ lb.
				Raw linseed oil.....	$\frac{1}{16}$ gal.
				Petroleum spirits ...	$\frac{1}{16}$ gal.
				Paint drier	$\frac{1}{16}$ gal.
122-N	Dark oak stain..	.....	....	Raw sienna, in oil...	2 lbs.
				Burnt umber, in oil..	2 lbs.
				Raw linseed oil.....	$\frac{1}{16}$ gal.
				Petroleum spirits ...	$\frac{1}{16}$ gal.
				Paint drier	$\frac{1}{16}$ gal.

[1] White shellac shall be used if necessary to give the desired finish.

[2] The above is a primer for Formulas No. 59 and No. 60 and is made by heating the asphalt and petroleum spirits over a slow fire until the asphalt is entirely dissolved.

[3] The above quantities are for approximate gallons.

Table 103.—Miscellaneous Formulas.—Continued.

Formula No.	Material.	Weight per gallon.	Covering power.	Ingredients.	1 gallon.
			Sq. yds.		
123-N	Cherry stain	.....	....	Burnt sienna, in oil..	3 lbs.
				Raw linseed oil.....	$\frac{3}{8}$ gal.
				Petroleum spirits	$\frac{3}{8}$ gal.
				Paint drier	$\frac{1}{4}$ gal.
124-N	Oil and water stop.	.....	....	Gum shellac, grade A	10 ozs.
				Pine tar	$\frac{31}{32}$ gal.
125-N	Dark mission stain.	.....	....	VanDyke brown, in oil.	2 lbs.
				Lampblack, in oil...	$\frac{1}{2}$ lb.
				Raw sienna, in oil...	1 lb.
				Petroleum spirits ...	$\frac{3}{4}$ gal.
				Interior varnish	$\frac{1}{16}$ gal.
126-N	Transparent wood filler.	.....	....	Whiting	85 lbs.
				Raw linseed oil.....	$1\frac{1}{4}$ lbs.
				Petroleum spirits	$1\frac{1}{2}$ lbs.
103-Na	Aluminum paint.	.....	....	Aluminum powder ..	$1\frac{1}{2}$ lbs.
				Aluminum varnish ..	7 lbs. 5 ozs.
130-N	Red lead for gasoline engines.	.....	....	Red lead, dry.....	18 lbs.
				Petroleum spirits ...	$\frac{5}{8}$ gal.
				Interior varnish	$\frac{1}{4}$ gal.
131-N	Green for gasoline engines.	.....	....	Chrome green, in oil	6 lbs.
				Lampblack, dry	$\frac{3}{4}$ lb.
				Interior varnish	$\frac{1}{2}$ gal.
				Petroleum spirits ...	$\frac{1}{2}$ gal.

Table 104.—Asphalt Enamel.

Formula No.	Weight per gallon.	Covering power.	Ingredients.	1 gallon.
59	$9\frac{3}{4}$ lbs.	.....	Paving asphalt.....	2 lbs. 10 ozs.
			Trinidad asphalt.....	3 lbs. 5 ozs.
			Val de Travers asphalt.	11 ozs.
			English rosin.....	$\frac{1}{4}$ oz.
			Slaked lime.....	2 ozs.
			Portland cement.....	14 ozs.
			Petroleum spirits.....	5 ozs.

NOTE.—The metal is first coated with formula No. 58.

Asphalt Cement.

(Formula No. 60.)

Trinidad asphalt	pounds	90
Paving asphalt	pounds	25
Val de Travers asphalt	pounds	25
Rosin	pounds	2
Powdered slack lime	pounds	3½
Portland cement	pounds	30

The metal is first coated with formula No. 58. The cement is applied hot.

Linoleum Cement.

(Formula No. 61.)

Whiting	pounds	120
Gum shellac, grade A	pounds	32
Alcohol (grain)	gallons	7½
Gasoline	gallons	1
Crude rubber	ounces	2

The rubber is cut in the gasoline and is then added to the mixture of the other three ingredients and the whole is then ground to an intimate mixture. There are about 10½ pounds of cement in 1 gallon.

Slate Color Smoothing Cement.

(Formula No. 62. For 100 pounds.)

Whiting	pounds	32
White lead, dry	pounds	16
White zinc, dry	pounds	16
Litharge	pounds	16
Lampblack, dry	ounces	9
Raw linseed oil	gallons	1½
Turpentine	gallons	¾
Paint drier	gallons	⅜

Red Smoothing Cement.

(Formula No. 63. For 100 pounds.)

Venetian red, dry	pounds	10
Whiting	pounds	32
White lead, dry	pounds	16
White zinc, American, dry	pounds	16
Litharge	pounds	16
Raw linseed oil	gallons	1½
Turpentine	gallons	¾
Japan drier	gallons	⅜

Oil and Water Stop.

(Formula No. 64.[1] Weight per gallon, 19 pounds.)

Clear shellac ..... 3 quarts 2 gills.
Red lead, dry .....12½ pounds.

EXTRACTS FROM U. S. NAVAL REGULATIONS AND INSTRUCTIONS IN REGARD TO PAINTS AND PAINTING.

Preparation of Bottom Before Painting in Dry Dock.

Art. 2703, Par. (2), N. I.

"(2) When a vessel is docked, the bottom shall be thoroughly cleaned, and all blistered paint scraped, but no paint of any kind which adheres firmly and affords protection is to be removed, unless specific instructions have been received from the Bureau of Construction and Repair to that effect. Under exceptional circumstances only, to be specifically stated, shall red lead or a mixture of red lead and white zinc be used, and in such cases the bottom shall be carefully prepared and ample time allowed for the paint to dry thoroughly."

Rubber Gaskets Not to be Painted.

Art. 2705, N. I.

"(4) The rubber gaskets of water-tight doors, manholes, hatches, airports, etc., shall not be painted, greased nor oiled; louvres, gauze air screens, screw threads, moving parts of auxiliary machinery and zinc protectors on the bottom shall not be painted."

Whitewash and Shellac.

"(8) Whitewash and shellac shall never be applied to any iron or steel parts of the ship."

[1] The above will give a mixture about the consistency of thick paste. For light plating, stops will be made by soaking 10-ounce canvas for one-half day in clear shellac, then coated with the above mixture. For heavy plating ball lamp wick will be treated in the same way.

Precautions Before Entering Double Bottoms.

"(10) When about to examine, clean or paint double bottoms, or boilers, the following precautionary measures shall be adopted: They shall be opened and well ventilated, a connection being made to a fan system if possible. This done, the purity of the air shall be tested before entering by burning a candle on the bottom at least five minutes. Working parties inside shall always maintain communication with some one outside; they shall also have with them a lighted candle, and shall withdraw should it begin to burn dimly."

Oiled or Painted Canvas: Lights in Paint Room.
Art. 2707, N. I.

"(2) Oiled or painted canvas, and other oiled or painted fabrics, shall not be stowed below, and when not in daily use shall be frequently examined. Caution shall be used when lights are taken into the paint room."

Stowing Inflammable Liquids.

"(4) No inflammable liquid or explosive oil shall be allowed on board for ship's use, except such as is permitted by the allowance books. Spirits of turpentine, alcohol and all varnishes and liquid driers shall be kept in five-gallon shipping cans, securely stowed in chests on upper decks; and none of these liquids shall be taken below except in small quantities for immediate use. Asphaltum, varnish, boot topping and all other compounds of turpentine, naphtha, benzol or similar materials shall be included in this category. These compounds give off gases which, when inhaled, produce unconsciousness and asphyxiation or poisoning; the formation of poisonous gases by the interaction of varnishes, etc., salt water and air are not necessary to produce these results, it being only necessary to have open or leaking cans of varnish, etc., and a high temperature to have present all the elements necessary for causing insensibility. Certain brands of metal polish may generate explosive or asphyxiating gases, and such brands shall therefore not be stowed below."

Paint Materials, Care of Drums, Etc.
Art. 4583, N. I.

"(1) All paints and shellac issued for use on shipboard under the cognizance of the Bureau of Construction and Repair, shall be mixed ready for use and put up in closed containers. All such paints and painting and cementing generally shall conform to the requirements of general instructions for painting and cementing vessels, general specifications, appendix 6, approved by the Navy Department, and obtainable from the Bureau of Construction and Repair.

"(2) Raw paint material may be issued to ships on 'in excess' requisitions in small quantities for special purposes, which purposes shall be stated on the requisition. Small quantities of alcohol may be issued for thinning shellac if necessary. Empty 10-gallon drums shall be cleaned by the ship's force before being returned to the navy yards.

"The 10-gallon drums, in which a greater portion of the ready mixed paint will be issued, can be used repeatedly, and ships receiving ready mixed paints in these steel drums shall retain them on board when empty, to be turned in at the nearest navy yard for further use. All ready mixed paints manufactured at navy yards issued to ships must be thoroughly stirred in cans and drums before using in order to insure that paint has the proper body and to prevent waste of necessary pigments in residue of drums. The surplus of such paints for future use shall be carefully protected from the air."

FURTHER INSTRUCTIONS FOR PAINTERS.

(Not extracts from above official instructions.)

Simple Tests of Materials.

Test for Linseed Oil, Raw.

1. When placed in a thin glass tube and held to the light, bloom or iridescence indicates the presence of mineral or rosin oil.

2. Place a drop of the oil on a strip of glass coated with a film of lampblack; a bluish iridescence or bloom will indicate the presence of even small portions of mineral or rosin oil.

3. Place a few drops of the oil in the palms of the hands, and after rubbing briskly together, the presence of rosin oil or petroleum will be detected by its characteristic odor; fish oil will give a nauseating odor; corn oil will smell sweet and mealy; but pure linseed oil should have the characteristic odor of flaxseed meal.

4. Linseed oil placed on the tongue has a bland taste, at first changing to bitter and rasping, but not nauseating or offensive; mixed with rosin or mineral oil, the taste is offensive; fish oil is nauseating.

Test for Linseed Oil, Boiled.

1. For adulteration by petroleum, use the above test No. 2; test No. 3 above can be partially depended upon. A fishy odor in boiled oil, however, does not necessarily indicate adulteration with fish oil, as this fishy odor may belong naturally to a boiled linseed oil which has become aged.

2. When spread in a thin film on a piece of glass, and stood in a vertical position, pure kettle-boiled linseed oil should dry hard without tack, in from 24 to 48 hours, at a temperature of 70° F.

3. "Bung-hole-boiled" linseed oil is raw oil to which cheap benzine drier has been added. Test by filling a tube to a certain mark, and expose to the air for 24 hours, leaving top of tube open; note loss of volume by evaporation, which indicates the presence of benzine or other highly volatile oils. Light color and low viscosity also indicate that oil is either raw or is "bung-hole-boiled" to which driers are added to give it the drying qualities of boiled oil without raising the oil to the high temperature (350° F.).

Test for Spirits of Turpentine.

1. A single drop, placed on white paper, should completely evaporate at a temperature of 70° F., without leaving a stain.

2. A few drops on a piece of white paper hung vertically before the light, if pure and well distilled, should leave no mark on the paper after 5 to 7 minutes. A faint mark denotes the presence of rosin, due to imperfect distillation; this, however, is not a serious objection, as it does not harm the paint. If a greasy mark remains for an hour or more, it shows the presence of petroleum or kerosene oil, and if the mark remains for 12 hours, petroleum is present in large proportions.

3. Color should be water-white or slightly yellow, and not have the bluish tinge noted in benzine or coal oil.

4. Odor should be characteristic pungent, yet sweet, smell of turpentine, without the slightest odor of petroleum.

Test for White and Red Lead.

1. Burn a small portion on piece of charcoal with blow-pipe; if lead is pure it will be converted into a small globule or button of metallic lead; 5 per cent of adulteration will prevent the formation of this lead button.

CLEANING AND PAINTING SHIPS' BOTTOMS IN DRY DOCKS.

As dock is being pumped out, scrub the bottom well with deck brushes to remove all slime, grass, loose barnacles, etc. All foreign matter not removed in this manner should be taken off with scrapers; then brush the bottom well with wire brushes, to remove all loose paint and dust. In brushing off the bottom, care should be taken in getting all loose paint or rust in the pits and pin holes that may be found in the bottom plating; all rust scale should be scraped off. Then apply two coats of anti-corrosive and one coat of antifouling composition. If the bottom should be in good condition and only slightly foul, it may simply be brushed off with wire brushes to remove loose paint and dust, after which bare spots should be touched up, followed by the usual painting as above.

Regilding Figurehead.

Scrape off all loose paint and broken places, sandpaper the entire figurehead, touch up the bare and broken places with shellac varnish; next glaze up the uneven places with outside cement or hard-drying white-lead putty, after which apply the ground work, mixed as follows:

White Lead Tinted with Chrome Yellow.—One-third raw linseed oil and two-thirds spirits of turpentine, and sufficient drier to dry the same.

Oil Gold Size.—Take fat linseed oil and add sufficient chrome yellow to stain same; it is necessary to use a small portion of Japan drier, according to weather conditions.

Applying the Oil Gold Size.

Great care should be taken in applying the size to the work, which should be well brushed off under the brush to avoid runs and fat edges, which would cause a very unsatisfactory job when completed. The size should be tested before it is applied to the work. Ordinarily, size applied to the work in the afternoon should be in condition to gild the following day.

Laying the Gold-leaf on the Work.

In laying the leaf on the work, be careful to get all the surface covered well. Use a camel's-hair binder to fasten the leaf on the work. After the gold-leaf is laid on, go over the entire figurehead, mending all places that are not properly covered. Use raw cotton and camel's-hair binder to clean off surplus gold, and burnish with raw cotton. Do not attempt to burnish the same day the leaf is applied.

KEEPING PAINT BRUSHES.

After use, the paint or varnish should be thoroughly rubbed out of the brushes, and the brushes then placed in a liquid of some kind that will keep the bristles from becoming hard.

Brushes should never be set on end of the bristles in the liquid, this will turn up the ends in such way that good work cannot be done with them again. They should be suspended with about three-fourths of the bristles in the liquid; this may be done by boring a hole through the handle of the brush, through which a rod is run with the ends resting on or near the top of the vessel containing the liquid. When it is not convenient to hang brushes by the handles, if the bristles are wrapped in paper, they may be then stood on end in the liquid, because the paper stiffens the mass of bristles so that they do not bend out of shape, a small hole should be torn in the corner of the lower end of the paper after it is wrapped around the brush to permit the liquid to get in to the bristles; if it is desired to keep the brushes a long time without using them, this is decidedly the best method. Paint brushes wrapped in paper and placed with the ends in water will keep for six months and be in excellent condition when required for use again.

Brushes used in oil paints should always be kept in water, and brushes used in varnish kept in a mixture of raw linseed oil and varnish; brushes used in shellac and ship-bottom paint should be kept in thin shellac. It has been found to be a good practice to have a snug fitting cover for brush tanks in which shellac brushes are kept, by keeping the tank closed it prevents the alcohol in the shellac from evaporating so rapidly, thus keeping the shellac from getting thick. When varnish brushes are to be stowed away for a long time without using, they should be thoroughly washed out with petroleum spirits or turpentine, and then with warm water and soap, removing all the varnish from the bristles; shake and fluff the bristles out, permitting them to dry, then lay the brush away dry. The same practice may be applied to shellac brushes, using alcohol, of course, to wash them out. See page 689 for further data on the care of paint brushes. The following from a Bureau C. & R. circular letter:

"Paint Brushes, Inspection and Care of."

"It has come to this bureau's attention that paint and varnish brushes, in every way satisfactory at the time of inspection when delivered by the contractors, may, when issued from store, be defective in that they shed bristles to a very objectionable extent. This shedding of bristles has been ascertained to be due to the drying out of handles while in store.

"Steps should be taken to tighten the bristles of all paint brushes before they are put in use. This may be accomplished by wetting the end of the wooden handle inside of the bristles with about a teaspoonful of water, inverting the brush, and allowing about half an hour for the handle to swell, thus restoring the original pressure of handle and ferrule on the bristles. Better still, the brush may be immersed in water to top of ferrule for 24 hours."

The practice of dipping new brushes in water before using them is employed by most good, practical painters, the method usually being to immerse the bristles end of the brush to the top of the ferrule, then invert the brush, standing it with handle down for about half an hour to allow the handle to swell and tighten the bristles, after which rub the water out of the bristles and the brush is ready for use.

FORMULA FOR MIXING FLEXIBLE PAINT FOR TARPAULINS, BAGS, AND ALL OTHER CLOTHS WHERE FLEXIBILITY OF MATERIAL IS REQUIRED.

Black.

Common yellow or turpentine soap	2 ozs.
Beeswax	2 ozs.
Lampblack, in oil	10 lbs.
Rain water	3 pts.
Boiled linseed oil	12 pts.
Japan drier	½ pt.

Take the soap and beeswax, cut in small pieces, place them in a pot with the rain water, then start a fire and heat until the soap and wax have melted; then add the boiled linseed oil. When the oil has been well mixed with the soap, wax and rain water, and has been on the fire until hot, add the lampblack, great care being taken to mix thoroughly, with a wooden paddle, each ingredient as it is added, so that the ingredients may be incorporated with each other. When thoroughly mixed, remove from the fire and add the Japan drier. Keep this preparation in air-tight can until required for use.

Buff.

This shade of color is mixed the same as black, only use yellow ocher in oil instead of lampblack, and then add Venetian red in oil until the desired shade is produced.

OILING HOODS, ETC.

Take the above liquid, boiled oil, beeswax, soap, etc., and add to 1 gallon, ¼ pound of yellow ocher in oil; stir well and apply with a short bristle brush.

TO FINISH FURNITURE, OAK AND MAHOGANY.

First, apply wood filler, with which any desired color of stain may be mixed, allow this to dry about 16 hours, and then give the work a thin coat of shellac, followed by three to four coats of varnish, according to the condition of the surface. If quite smooth, three coats of varnish are generally sufficient. The work should be sandpapered lightly with 00 sandpaper after the shellac and also after each coat of varnish except the last one, which should be rubbed with pumice stone and water, and finally polished with rotten-stone. The shellac and varnish should in each case be allowed to dry hard before sandpapering or rubbing; shellac will dry hard in from four to six hours, and varnish in from 6 to 10 days.

TO BRIGHTEN UP FURNITURE WITHOUT APPLYING VARNISH.

Clean the surface well by rubbing with a little crude petroleum on cotton waste, after which rub dry and polish with clean, dry cotton waste or soft cloth.

TO BRIGHTEN UP LEATHER CUSHIONS, ETC.

If the cushions are dirty and hard, clean them off well with a little crude petroleum to remove the dirt and soften leather, allow to dry, and apply some of the many very good patented harness dressings according to directions always printed on packages. "Baum's French harness dressing" is an excellent preparation for this purpose.

REMOVING WHITE STAINS ON TABLES, CAUSED BY HEAT.

No process is known for removing, from polished wood, stains caused by heat, without entirely removing the varnish, except in cases where the stain is not very deep, when it may be much improved in appearance by rubbing lightly with pulverized pumice stone and crude petroleum, and then polishing with rotten-stone. Care should be taken, however, not to cut through the varnish, in spots, when rubbing with the pumice.

FORMULA FOR HARDWOOD FILLER.

Spanish whiting	3 lbs.
Turpentine	2 gi.
Raw linseed oil	1 gi.
Japan drier	½ gi.
Hard oil	½ gi.

VARNISHES.

Spar Varnish.—Does not dry as hard as other kinds, is more elastic, and should be used only on work exposed to weather.

Copal.—Dark in color, may be used for general rough interior work, such as hose racks, door facings, hardwood lockers, gun racks, pantry work, etc.

Damar.—Clear and has very little color, good quality should be almost "water-white"; used for making enamel paint, and for fine work that is not to be rubbed.

Mixing Varnish.—Mixing varnish used in making boot topping paints generally are combinations of raw linseed oil, China wood oil, petroleum spirits, lead manganese driers and sometimes rosin. It is a cheap varnish, and can be used successfully for a relative few purposes.

Furniture or rubbing varnish, and polishing varnishes are specially prepared by various firms; they are clear, flow smoothly and dry very hard.

PUTTY.

Common putty is made of whiting and linseed oil. The commercial article is ground in a mill, but putty may be made by mixing the two above ingredients with a putty knife.

White-lead putty is made by mixing white lead, ground in oil, with whiting or dry white lead.

Red-lead putty is made by mixing dry red lead with linseed oil; a little Japan drier should be added to each of the above, and the quantity of dry material, or oil, is to be governed by the consistency desired.

COMBINATION OF COLORS.

Various colors may be produced by combining the standard colors, the intensity of shades, light or dark, being governed by the quantity of the lighter or darker color used in the combination. White and black are not colors, but denote the combination of all colors or absence of all colors; they will, however, be considered and spoken of as colors, because they are so regarded in all practical painting.

The following are the ordinary standard colors of paint which cannot be made by combinations, but may be mixed

together for almost any color desired: Black, white, red, blue and yellow.

Table Showing Results of Combinations of Two Colors.

Black and white	produce	lead color, war color, or gray.
Black and yellow	"	olive or invisible green.
Black and red	"	brown.
Black and blue	"	dark blue.
White and yellow	"	light yellow or canary.
White and red	"	pink.
White and blue	"	light blue.
Blue and yellow	"	green.
Blue and red	"	seal brown (rich).
Red and yellow	"	orange.

There is no limit to the number of tints, shades and effects which may be produced by combining more than two of the above colors.

PAINT MATERIALS, PAINTS, AND PAINTING PRACTICES OF THE U. S. NAVY.

(By Mr. N. E. Adamson, Jr., Asst. Shop Supt., Navy Yard, Norfolk, Va.)

1. The most important materials used in manufacturing paints for the Navy are drying oils, volatile oils, pigments and resinous gums.

2. **Drying Oils.**—Drying oils are those oils of a vegetable origin, which at ordinary temperatures and upon exposure to oxygen (atmosphere) change from a liquid state into a solid elastic substance insoluble in the usual oil solvents. The most important drying oil used in the U. S. Navy is linseed oil. Other drying oils are used in combination with gum resins and linseed oil, as for example, China wood oil.

3. Linseed oil is used both as raw oil and boiled oil. Raw oil is a product obtained from crushing flaxseed. The process of manufacturing is a simple one, consisting of warm-

ing and cracking the flaxseed, forming the seeds into cakes, and then pressing the cakes in a hydraulic press until practically all of the oil is excluded. The fresh oil holds in suspension heavy gummy particles, which if not removed from the oil, will cause it to dry very slowly and probably would, under certain conditions, prevent its drying after application. Accordingly the fresh raw linseed oil is put into large settling tanks and these gummy particles form a sediment known as "foots." This sediment has a commercial value somewhat less than that of raw oil and it can be used in the manufacture of soap. Some paints are made from foots but such paints are quite poor in qualities.

4. Boiled linseed oil is the product obtained from heating raw linseed oil until part of the glutinous ingredients in the oil has thickened. Navy Department specifications require that the temperature to which the oil is raised shall be not less than 350° F. While the oil is boiling, lead and manganese oxides are added, which gives the boiled oil greater drying qualities. Boiled oil is heavier in body and darker in color than the raw oil and dries with less absorption of oxygen from the atmosphere. It is used chiefly in the Navy for paints to be applied in confined spaces. There are several grades of boiled oil, the grade name generally implying the method of boiling. There is one grade, however, known as "bung-hole," which is quite inferior to boiled oil made in kettles over a fire. "Bung-hole" oil is generally made by adding through the bung-hole of a barrel containing raw linseed oil a sufficient amount of driers to darken the raw oil, increasing its drying properties and giving the raw oil the appearance of boiled oil.

5. We speak of linseed oil's "drying," but as a matter of fact the term drying is not used here in its correct meaning. Drying should imply the losing of volume in weight from the vaporization of a part of the substance. When linseed oil dries its weight increases from 16 to 17 per cent, that is, it

takes up oxygen from the atmosphere in a chemical change of the molecular construction of the oil, changing the oil to a solid elastic substance known as "linoxin." This chemical change has an important bearing upon the welfare of the personnel living in rooms or compartments, which have been recently painted. One gallon of oil applied to the walls will require all the oxygen in 65 cubic feet of air to dry it. The headaches, etc., caused are due more to the rarification of the oxygen in the atmosphere than to the toxic effect of the turpentine generally used in the paint. In computing the weight of paint applied on board vessels, the neglection of the increase in weight due to oxidation will cause an error of about 10 per cent, which error is reduced to about 5 per cent when allowance is made for loss in weight due to the evaporization of the volatile oils used in the paints.

6. Before leaving the subject of drying of oil, it is well that a word of warning against the use of "driers," "Japan drier," or "paint drier" should be given. Such driers are used to speed up the oxidation of the linseed oils. If used excessively, the linseed oil is "burned" to such an extent that the film becomes non-elastic or entirely breaks down, thus permitting the paint to disintergrate or fall off in particles. The first symptoms from the effect of the excessive use of driers are small checks in the paint film. The ideal paint is one in which no drier is used, but such an ideal cannot be used in the Navy, because it is essential to speed up the drying. It is a good rule never to add more than 2 gills of a poor grade paint drier (such as is carried in stock at navy yards and costs from 40 to 80 cents per gallon) nor more than ½ gill of an excellent quality of Japan drier (such as is on the market at a cost of about $1.50 to $3.00 per gallon) to a gallon of paint.

7. **Volatile Oils.**—The most important volatile oils used in Navy paints are turpentine and petroleum spirits. In general an excellent grade of petroleum spirits is a very satisfactory substitute for turpentine. Both are used in oil paints to thin

the paint so that it can be more readily applied with a brush or painting machine. Since the volatile oils pass out of the paint films, soon after the film is applied, they do not add anything to the durability or life of a paint film. The use of gasoline or other oils more volatile than turpentine or petroleum spirits give poor results from the fact that they vaporize so fast that the oil in the film does not have a chance to fill up the spaces which were occupied by the volatile oil. This results in numerous small holes or pores being formed in the film through which pores the atmospheric moisture reaches the surface on which the paint was applied, causing rust or decay. Volatile oils should be used sparingly in oil paints.

8. **Flat Paints.**—There are certain paints, known as flat paints, such as flat white and flat green paints, which contain a large proportion of turpentine or petroleum spirits. Such paints are used where they will not be exposed to the weather, because when the paint film is dry it contains nothing but the pigments with only a sufficient amount of drying oil to hold the pigments to the surface to which the paint was applied. If such paints are applied on exposed surfaces they will soon wash off. Flat paints are generally used where a paint film, which is glossy and forms a good reflector of light is objectionable. The paint specifications will guide you in selecting the kind of paints to use.

9. **General Information.**—The Navy uses paints, varnishes and stains. A paint is a combination of oils and pigments, sometimes oils, varnishes and pigments. A varnish is a combination of oils and gums or resins. Stains are combinations of coloring pigments and oils. Paints are used to preserve from corrosion or decay and to give a desired color to the surface on which it is applied. Varnishes are used directly on wood or over a paint applied on wood or steel to bring out the color of the wood or the paint, giving it a richer and a more glossy appearance. It also protects the surface on which it is applied, but the protection is not so great from the use of paint. Stains

are used on soft woods to give it the appearance of rarer hard woods, or on iron and steel to imitate the rarer hard woods. Paints and stains are manufactured at navy yards and should be obtained from such sources rather than attempt to make them on board ships. Varnishes, with certain exceptions, are not made at navy yards, but are purchased and carried in stock at navy yards, from which source they should be obtained. The reasons why paints should not be made on board ships are first, that most paints require a grinding process in paint mills and in order to thoroughly mix the pigments with the oils and to break up or grind finer the particles of pigment, and, second, because of the necessity of maintaining standard colors. It can be readily understood that these requirements cannot be met on board ships where paint mills and standard samples are not available. The navy yards are supposed to deliver for use only such paints as are entirely suitable and ready for application. In the event you should find that the contents of a can or a drum is not in a fit condition to apply after the contents have been thoroughly stirred, you should report this fact, giving the name of the paint, formula number, name of the yard and the date of manufacture, all of which is given on a legend on the side of top of each can or drum of paint manufactured at the various navy yards. Paints are put up in one-gallon and two-gallon cans and ten-gallon drums. Your requisitions for paints should be in multiples of these quantities. Striping paints, that is, the paints used for marking pipes, conduits, etc., are put up in one pint cans.

10. On opening a can or drum of paint you will generally find that the pigments have settled in the bottom and that the lighter oils are at the top. If the can is too full to stir without wasting some of the liquid, you should pour off into a clean can some of the liquid. Stir the remainder and after the sediment is thoroughly mixed with this liquid then add the liquids, which were poured off and stir thoroughly. A painter usually has a method of stirring which is quite effective and which

consists of reversing the direction of stirring after two or three turns, and of giving the lower end of the stick a slightly upward tilt as he stirs.

11. In applying paint the first operation is to work the brush into the paint so that the paint is on every fiber. This can be done in two ways. The better method consist of dipping the brush in the paint until about one-half the length of the fibers are submerged and then slightly rotating the brush by holding the handle of the brush between the palms of the two hands and sliding one hand past the other, then working the brush against the inner edge of the can. Another method is to dip the brush in the paint and then work the brush against the edge of the can or on a board until it is thoroughly worked into the paint.

12. A painter will use care to take just enough paint on his brush to proceed with the work without dripping paint from the brush and without causing the paint to run after it is applied. If he is painting a sufficiently large surface, he will "cross" his work, that is, he will cover a portion of the area with strokes in one direction and finish with strokes perpendicular to the first strokes. He will leave the surface with no brush marks showing and with all parts of the surface covered.

13. The normal average cost of Navy paints is $1.00 per gallon. The paint that is lost by dripping from the brush, by spilling over the sides of the cans and by overturning cans, cost just as must as the paint that is used.

14. While painting in cabins and other places where drops of paint are apt to fall on the installed equipment or on the linoleum, the painter should use a piece of canvas under his work.

15. When the painter has completed his work he should work out the brush on the edge of the pot or on a paint board, if such a board is available. The brush can then be easily cleaned and stowed ready for use. Brushes for use in oil paints should be stowed by wrapping the fibers in paper and standing the brush

in water so that about three-fourths of the lengths of the fibers are covered. Brushes used in shellac or bottom paint should be stowed in thin shellac. Brushes should not be stowed by putting them in cans or boxes with the weight of the brushes resting on the fibers until the fibers have been wrapped with paper. Varnish brushes should be kept in a mixture of varnish and oil. Varnish and shellac brushes should be suspended in cans or boxes by passing the wire through the handles and supporting the ends of the wire on the edge of the box.

16. All cans and drums of paint when stowed should be covered so as to exclude air. This prevents evaporization of the lighter oils and the oxidation of the linseed oil. In the event air does get into the paint while stowed and causes the formation of a heavy skin over the surface, the skin should be removed, not stirred into the paint, before using.

17. **Good and Bad Practices.**—In the service you will find many peculiar practices among painters. A few of these should be given your attention. There is a prevalent idea that the addition of water, usually dirty dish water, to red lead paint improves the quality of the paint and causes it to work better under the brush. Often the painter will pour about one-half gallon of such water into a half-used drum of paint at the close of a day's work. Such a practice should be discontinued since the introduction of water greatly impairs the properties of the red lead paint as an iron and steel preserver. The paint doctored in this way does often work easier under the brush, but this benefit does not offset the disadvantage of having to frequently scale and repaint.

18. There is a great tendency to apply shellac on new linoleum, which has become dirty. The department permits the use of shellac only on linoleum previously shellacked and has directed that all other linoleum be cleaned by washing with soap and water and after drying, treated by rubbing with raw linseed oil, in which a small amount of drier has been added. Shellac rots linoleum. Linseed oil preserves linoleum.

19. There is generally one painter in every group of painters, who claims to be able to mix a paint superior to the standard paint. Sometimes their claims can be proven correct, but most of the times the painter is mistaken. The navy yard and Navy Department files are full of proposed formulas, which have proven inferior to the standard formulas. The standard formulas were adopted only after long tests at navy yards and on board ships, which tests have been checked by other tests at other navy yards and on board other ships. The claim for these formulas is not that they are the best, but that they produce, at the lowest cost, a paint suitable for a particular purpose.

20. There is a great tendency to cleanse the hands with turpentine. The constant use of turpentine in cleaning hands will lead to what is known in the trade as "drop wrist." Oil paints should be removed from the hands with warm soap and water or with linseed oil, if necessary.

21. Painters should be required to refrain from chewing tobacco, smoking or eating while their hands are soiled with paint. This is a precaution against lead poisoning. A further precaution is to require a painter to cover his hands with soap suds and permit the suds to dry before handling red lead putty (used in bedding zincs). The hands so treated will easily be cleaned when the work is completed because the putty will generally slide off the hands and thorough washing is much easier. Linseed oil may be used in the winter instead of soap suds, thus preventing chapped hands.

LAYING TILING.

The space allowed for the installation of ceramic tiling should be not less than 3 inches deep. The concrete foundation should be about 2 inches to 2½ inches thick, consisting of one part Portland cement to two parts sharp sand and two parts gravel, well mixed with water, tamped down solid and allowed to set. Over this is spread a coat of mortar consisting of one

part Portland cement and one part sand mixed with water, in which the tiling is set; this coat should be sufficiently thick to bring the tiling slightly higher than the required level, to allow for setting the tile down into the cement mortar, and for the cement which is squeezed up into the seams.

The tile should be laid immediately after the mortar is spread, and only such space should be covered at one operation, as will allow ample time to properly place the tiling before the cement begins to set.

The smaller sizes of tile are furnished in sheets glued to paper, which greatly facilitates the work of setting it; the sheets are laid with the paper side up, matching the edges neatly, after which the whole surface should be tapped down firmly and evenly to the required level with a smooth surfaced block of wood, using a hammer on the block. The paper is then removed by moistening it with a sponge or brush and pulling it off gently; when the paper is all off, it is again necessary to go over the tiling with the wood block, simply rubbing and tapping lightly to make sure that none of the pieces are tipped or depressed; this part of the operation should be very carefully done, for when the cement once sets, it is very difficult to make corrections.

If the compartment being tiled is so large that all of the tiling cannot be laid at one operation, remove enough of the cement mortar along the line where the setting ends, while it is fresh, to leave a perfect edge so that when starting the next section it will be an easy matter to connect the two; in starting a new section, the cement which has already set should be slightly roughed and wet so that the new cement will stick to it.

When the tiling is all laid, it is necessary to grout it, or fill the joints from the surface, which is done by spreading a mixture of pure Portland cement mortar over the entire surface; this mortar should be thin enough to run into all joints and cracks between the tiling, and should be well rubbed in with a trowel; allow this to stand about 15 or 20 minutes, and then rub

off the entire surface with sawdust; this will clean off the surplus cement and leave a nice smooth finish, after which the surface should be covered with clean, dry sawdust.

The tiling should now be allowed to stand undisturbed for about 24 hours, the time required for it to set hard.

Much care should be exercised to have the surfaces of the concrete foundation and mortar even, uniform, and the proper thickness where required to give the necessary slope from all bulkheads, stanchions and other fittings, so that the finished surface will have the proper pitch to prevent water standing at these places, and cause it to flow freely to the deck drains.

Wherever cement is used on iron or steel, the surface of the metal must be thoroughly cleaned down to the bare metal, and care should be taken to clean off all oil, dirt, paint, scale and other foreign matter.

QUESTIONS FOR PAINTERS.

Q. What are the principal elements of paint?

A. Paint is composed of two elements, the base which is the pigment giving it body and color; and the vehicle which is the oil and other liquids forming the fluid paint.

Q. What are pigments?

A. Solid substances of various colors, such as white lead, yellow ocher, chrome green, etc., ground into fine powder for mixing with oil.

Q. What are the principal pigments used in making all light colored paints?

A. White lead or white zinc, or both as a base, the desired tint or shade being obtained by adding pigments of various colors as required.

Q. What are the rough distinctions between white lead and white zinc as found in practical painting?

A. White lead is a chemical product of metallic lead, being composed usually of three parts carbonate of lead and one part hydrate of lead.

White zinc is the oxide of zinc.

White lead is extensively used in house painting.

Lead is not found to make so white a finish as zinc, but is more opaque, and does not require so many coats of zinc to cover a dark background. White lead dries somewhat softer and, when exposed to the elements, will eventually become chalky with a flat appearance resembling whitewash, and will come off readily on the hand. White zinc in drying becomes very hard, showing that the weakness of white lead is the strength of white zinc, and vice versa; and it is for these reasons that a mixture of lead and zinc makes such a good combination.

A very excellent outside white is made by a combination of lead and zinc; the proportion used for outside white in the Navy is 5 pounds of lead and 9 pounds of zinc to 1 gallon. Lead works tougher under the brush, is harder to spread, and requires more thinners than zinc.

Zinc is more crisp under the brush and requires more rubbing out.

Flat white for inside work is usually made of white zinc entirely as a base.

Q. What are the principal vehicles or liquids used in mixing paint?

A. Raw and boiled linseed oil as a body or binder, spirits of turpentine or petroleum spirits as thinners, and driers.

Q. What are the distinctions between raw linseed oil and boiled linseed oil?

A. Raw linseed oil is pressed from the seed of the flax plant. Boiled linseed oil is made by heating the raw oil to a temperature of from 300° to 500° F., or by adding about 2 per cent of oxide of lead or oxide of manganese, or both, which produces the same effect as boiling; this treatment generally increases its drying properties.

Paint made with boiled oil will dry in 24 hours, which is about one-fifth the time required for paint made of raw linseed

oil to dry hard; the use of driers, however, in paints made of raw oil will cause them to dry as quickly as if boiled oil were used, and in modern practice the general use of boiled oil has been discontinued except for special work, such as paint for confined spaces, etc.

Q. Describe spirits of turpentine and petroleum spirits and their use as thinners.

A. Spirits of turpentine is distilled from the gum of the pine. Petroleum spirits is a product of petroleum or crude oil and is somewhat akin, physically though not chemically, to benzine, gasoline, etc., and is very commonly used as a substitute for spirits of turpentine.

These liquids are used principally in paint as thinners, and are classed as volatile thinners, that is, they evaporate very quickly; turpentine is to a large extent a carrier of oxygen; this puts it in a class with driers, which effect it does have to a considerable degree.

Linseed oil is also a thinner, but the extent to which it will thin is limited to the density of the oil, and as this is the binding which holds the pigment together, great quantities used as a thinner can only have the effect of suspending a given amount of pigment in a greater volume, while the excessive use of volatile thinners will have much the same effect as too much driers; therefore much care should be exercised in thinning with spirits of turpentine and petroleum spirits, not to use too much, and especially on work which is to be exposed to the weather; these thinners have a tendency to lessen the toughness of paint, while linseed oil adds this quality to it.

Q. Describe driers and their use.

A. There are two classes of driers used in oil paints, Japan or resin driers and oil driers.

Japan driers are made by fusing metallic salts with rosin or resin and linseed oil and reducing it with benzine or turpentine.

The simplest method of making oil driers is to heat linseed oil, to which has been added lead and manganese oxides, to a

temperature of 500° to 600° F., until the oxides and oil are combined, and while this mixture, which is black in color, is still warm, it is dissolved in turpentine. The proportions of oxides to oil is about 4 pounds to the gallon; the amount of lead oxide used is usually greater than the manganese. This drier is somewhat dark in color.

A drier much lighter in color may be made by dissolving the lead and manganese oxides in a larger amount of oil, and at a lower temperature. A drier of this kind is not believed to be so injurious to paint, although all driers have a tendency to lessen the durability of paint.

Japan driers if spread on glass will dry in a short time like varnish, while oil driers will remain tacky for a long time. Of the two, oil driers are generally considered the better because their progressive oxidation is slower than that of Japan driers.

Q. What is the result of using too much drier in paint?

A. Where oil is used without drier and is allowed to dry naturally, it absorbs oxygen from the air, becoming a solid substance, after which no further oxidation occurs; but if a drier is added it acts as a carrier of oxygen, and while the action is very much decreased when the paint hardens, it does not cease entirely, but continues to oxidize the film, and finally destroys its toughness, causing it to crumble, and when this occurs, the painter's expression is that the paint is "burned" with driers. Driers used in moderation do not visibly produce this disastrous effect, although the chemical action is the same in all instances, the extent of oxidation being in proportion to the amount of oxide (driers) used.

As it is impracticable to wait four or five days for paint to dry, which would be necessary if only oil were used, the use of driers has been adopted to facilitate the completion of work; and they are for this reason, one of the essential ingredients of paint. But great care should be exercised not to use them in excess, for haste makes waste in paint as in other things, and it is usually considered by practical painters, to be a fact that

the longer it takes a coat of paint to dry the longer the paint will last.

Q. Describe the principal characteristics of red lead.

A. Red lead is composed of the oxide of metallic lead.

It is used as a priming coat on black iron and steel, and has been found to be the most efficient paint for this purpose.

Pure red lead should not be mixed in advance for use, because with linseed oil it forms a distinct combination which becomes hard and unfit for use in a short time. It acts somewhat in the same manner as plaster Paris or Portland cement when mixed with water; once it sets, it must be reground and will not set again, although by adding silica, clay and other inert pigments, it has been found that a very good ready mixed red lead can be made. The addition of dry silica alone (about 4⅔ pounds per gallon) has been found to prevent the setting or hardening of red lead paint in cans after mixing, without materially affecting its efficiency.

Putty made of red lead makes an excellent cement for pipe flanges and other water-tight joints.

Q. What precautions should be taken before painting iron or steel?

A. It should be thoroughly scraped, scaled and cleaned down to bare surface, and should be thoroughly dry and free from oil, grease or other foreign matter.

Q. How should the surface of galvanized iron be prepared for painting?

A. Cleaned with an ammonia or vinegar solution.

Q. What precautions should be taken where surfaces are to be cemented?

A. No paint is to be applied.

Q. What precautions are to be taken in painting machinery and hull fittings?

A. To see that no paint is applied to working surfaces or to oil holes or grooves, nor to rubber gaskets in doors, manholes, hatches, airports, etc. See page 693.

Q. What colors are the lamp pockets in running light boxes painted?

A. Red for port pocket and green for starboard pocket.

Q. What precautions should be taken with regard to zinc protectors when the bottom is being painted?

A. They must not be painted; zinc protectors shall, however, be bedded in red lead putty.

Q. How should metal behind built-in joiner work be painted?

A. With two coats of red lead before the joiner work is fitted in place.

Q. What are the restrictions as to the use of whitewash aboard ship?

A. Whitewash or similar compositions shall not be applied to any metal portions of a vessel.

Q. What ingredients are used in mixing white paint for outside work?

A. See page 739.

Q. Name the ingredients for mixing, and describe the manner of applying white enamel to inside work.

A. See pages 724 and 740.

Q. What are the ingredients for red lead for outside work? For confined spaces?

A. See pages 738 and 740.

Q. What precaution should be taken in mixing red lead, and why?

A. To mix only such quantity as required for immediate use, because mixed red lead, if allowed to stand, will harden even in sealed cans.

Q. What precaution is taken to prevent knots or fat streaks from showing through where pine wood is to be painted?

A. Shellac the knots and streaks.

Q. What is the weight of a gallon of slate-colored paint, and how many square yards of surface will it cover?

A. Weight, 15 pounds 8 ounces. Covering power, 53 square yards.

Q. What kind of varnishes are used for interior work on hard wood?

A. Copal, hard oil finish, and many interior varnishes manufactured by different firms.

Q. What varnishes are used for work exposed to the weather?

A. Spar varnish and coach varnish.

Q. What is meant by "fat paint," and what causes it to become so?

A. Paint becomes "fat" if left too long exposed to the air in an open pot, and is unfit for use. It may be reclaimed, however, if it has not been standing too long, by removing the fatty oil and paint skins from the top, and thinning with a little turpentine and linseed oil.

Q. Describe the process of making common putty, and red lead putty.

A. Common putty is made of Spanish whiting and linseed oil.

White lead putty, by mixing white lead, ground in oil, with Spanish whiting or dry white lead.

Red lead putty, by mixing dry red lead with linseed oil.

A little Japan drier should be added to each of the above; the quantity of dry material, and oil, is governed by the consistency desired.

Q. Describe the process of applying gold-leaf.

A. See page 751.

Q. Describe the proper care of paint brushes after use.

A. See pages 689 and 751.

Q. Describe the method of softening hard paint brushes.

A. Stand the brushes about 10 hours in soft soap and clean them in warm water, after which clean in benzine and turpentine.

Brushes that are very hard and dry can be softened by suspending the bristles about 10 hours in a solution of one part

soda to three parts water; the solution must be kept warm, but not too hot, as this would spoil the bristles; a temperature which the hand can bear will be about right. After this clean with warm water and soap, and finally clean with benzine or spirits of turpentine.

Q. Describe the process of finishing hard wood, such as oak and mahogany furniture.

A. See pages 727 and 754.

Q. How is Portland cement mortar mixed?

A. One part cement to two parts of sand mixed with fresh water.

This is to be mixed in small quantities to prevent settling prior to application, and in general should be mixed as wet as can be worked under the trowel.

Q. How should iron or steel surfaces be prepared before applying Portland cement?

A. Thoroughly cleaned down to the bare metal, and care should be taken to clean off all oil, dirt, paint, scale and other foreign matter.

Q. In what places aboard ship is Portland cement generally used?

A. As a base for tiling, places difficult to access in stem casting around shaft tubes, pockets in deck landings on stem casting, the space between bounding angles and corrugated divisional bulkheads, the pockets of staples in the seamen's head, in built-in ash and garbage chutes, and in general where structural arrangements form small pockets which are inaccessible or will not drain by gravity.

Q. When a space of considerable depth is to be filled, what other substance is used in connection with cement?

A. In confined spaces where filling has a depth over three inches, coke crushed to small size is used as a bottom filling. A thin coat, about 1 inch thick, of cement mortar, is first put on, the coke is then mixed with a thin cement mortar, and the

space filled, leaving 1 inch at the top, which is then finished off with a 1-inch coat of fresh mixed cement mortar, sufficiently stiff to be troweled to a surface.

For further data on Portland cement, see text page 732.

Q. Where is asphalt cement used?

A. To fill in spaces which are subject to vibration, such as between shell and shaft tube, bottom of chain lockers, etc.

Q. How should the surface be prepared before applying asphalt cement?

A. Thoroughly cleaned and given a coat of asphalt priming (formula No. 58).

Q. What is cork paint and why is it used?

A. Cork paint is pulverized cork held on to the surface by a sizing over which paint is applied in the usual manner.

Cork paint is applied only to such interior surfaces in living quarters, storerooms, magazines, etc., as are directly exposed to chilling by conduction through metal from the action of wind or water, or where sweating would occur due to opposite extremes in temperature.

Q. Describe the process of applying cork paint.

A. See page 725.

Q. Describe the method of cleaning and repolishing metal furniture.

A. See page 728.

Q. What precautions should be taken to prevent lead poisoning?

A. See page 736.

Q. Describe the operation of laying linoleum.

A. See page 729.

Q. Describe the operation of laying tiling.

A. See page 764.

CHAPTER VIII.

PROMOTION IN ARTIFICER BRANCH.

Many more opportunities for promotion are offered young, progressive mechanics in the artificer branch of the Navy than they would ever obtain in civil life. This is true because the number of vacancies in positions above the lower ratings in the service are so much greater, in proportion to the available, competent men to fill them, than is found in civil establishments.

A man to gain this promotion, however, must first prove himself worthy of it. This is done by striving to do your work well, by diligently and zealously performing your duties, by a strict observance of the rules and regulations of the Navy, and by unqualified obedience of the orders of your superior officers.

The following are the ratings, beginning with the lowest, and their respective rates of pay:

Carpenter's Mate Class.

Shipwright	$27.50 per month.
Carpenter's mate, 3d class	33.00 per month.
Carpenter's mate, 2d class	38.50 per month.
Carpenter's mate, 1st class	44.00 per month.
Chief carpenter's mate, acting appointment	55.00 per month.
Chief carpenter's mate, permanent appointment	77.00 per month.

Shipfitter Class.

Shipfitter, 2d class	$44.00 per month.
Shipfitter, 1st class	60.50 per month.

Painter Class.

Painter, 3d class	$33.00 per month.
Painter, 2d class	38.50 per month
Painter, 1st class	44.00 per month.
Plumbers and fitters	49.50 per month.
Blacksmith, 2d class	55.00 per month.
Blacksmith, 1st class	71.50 per month.

Men are required to serve a probationary term of one year in each rating, after which they are entitled to be advanced with an acting appointment to the next higher rating, provided, however, that their proficiency, obedience and general deportment show that they deserve such promotion.

QUALIFICATIONS FOR CHIEF CARPENTER'S MATE.

The following are the qualifications necessary for a chief carpenter's mate to receive a permanent appointment:

He should be able to read and write English and have some knowledge of arithmetic.

He should have been in the service for a period of not less than three years.

He should be an excellent mechanic, thoroughly familiar with all wood-working repairs generally required on board ship, and be fairly well acquainted with ship construction.

He should have sufficient knowledge of the pumping and drainage to pump compartments.

He should have a fair knowledge of the steam steering engine, and be thoroughly familiar with the capstan, windlass and deck winches, and be able to operate same.

He should know what valves to close when the drydock is being flooded preparatory to a vessel being taken out.

He should be well posted on the care of air ports, manholes, battle hatches and water-tight doors.

He should have sufficient knowledge of stores to enable him to exercise full care of them.

PROMOTION TO THE GRADE OF CARPENTER (WARRANT OFFICER).

A great many men of the artificer branch have been appointed carpenters in the Navy, the pay and allowances of which are from $1608 per annum to $2358 per annum, and after six years as carpenters they are promoted to the grade of chief carpenter, receiving as high as $3696 per annum, pay and allowances. Chief carpenters rank with but after ensigns.

QUALIFICATIONS FOR APPOINTMENT AS CARPENTERS (WARRANT OFFICER).

(Paragraphs 2 and 3, Article 3316, Navy Regulations.)

"(2) He must be a good mechanic, having a general knowledge of practical shipbuilding in wood, iron and steel, and of the qualities and strength of the materials used therein. He must be able to read plans, make working sketches, furnish estimates of the cost of work, and keep accounts of stores; he must understand in general the care and preservation of ships, their equipment and fittings, and the care and operation of such apparatus and machinery as he may be required to look after on board ship; and be familiar with the precautions necessary to be taken in docking and undocking ships.

"(3) He must be able to read and write with facility; must understand the first four rules of arithmetic, and proportion; must be able to keep correct account of stores; and must be thoroughly conversant with all drills and regulations of the Navy pertaining to the duties of a carpenter."

DEFINITIONS.

Abaft.—Toward the stern.

Abeam.—On a line at right angles with a ship's keel.

Aft.—Near or toward the stern of a vessel.

Amidships.—The middle or center of a vessel, either fore and aft or athwartships. The amidship frame of a vessel is at ⋈ and is termed "dead flat."

Anneal.—To heat steel or iron and allow it to cool slowly to toughen and soften it. Brass or copper is annealed by heating to a cherry red and dipping suddenly in water while hot.

Arbor.—The principal axis or spindle of a machine of revolution.

Athwart.—Across, from side to side, transverse, across the line of a vessel's course.

Athwartships.—Reaching across a vessel, from side to side.

Balk.—(In carpentry.) A piece of timber from 4 inches to 10 inches square.

Batten.—(In carpentry.) A piece of wood from 1 inch to 2.5 inches thick and from 1 inch to 7 inches in breadth, when less than 6 inches in length it is termed a deal end.

Beam.—The greatest width of a ship or boat.

Bevel.—A term for a plane having any other angle than 45° or 90°; a small tool similar to a try-square, except that the blade is adjustable for taking bevels.

Binnacle.—The receptacle (usually of brass) containing a steering compass and lamps.

Bitter End.—(Nautical.) The inboard end of a vessel's anchor chain which is made fast in the chain locker.

Breadth Extreme.—Width over outside of shell plating or armor plating at widest frame.

Depth Moulded.—The depth from the top of the keel to the top of the main deck beam at side.

Moulded Breadth.—The width of the widest frame at its outside, and is therefore a dimension taken inside of all shell plating.

Calk.—To stop seams and pay them with pitch, etc., or to drive the adjoining edges of metal together to stop or prevent leaks.

Cam.—A projecting part of a wheel or moving piece in machinery, so shaped as to give variable motion to another piece against which it acts.

Camber or Round Up.—The curve or convex toward the top, given to deck beams to add to the arch strength of the structure and insure proper drainage of decks.

Camel.—(In engineering.) A decked vessel having great stability designed for use in the lifting of sunken vessels or structures. A float.

Capstan.—A vertical windlass.

Carlings.—Pieces of timber set fore and aft from the deck beams of a vessel, to receive the ends of the ledges in framing a deck.

Chamfer.—A bevel surface formed by cutting away the angle of two faces of a piece of timber.

Chock.—(In naval architecture.) A small piece of wood used to make good any deficiency in a piece of timber, frame, etc.

Cleats.—Pieces of wood or metal, of various shapes according to their uses, either to belay ropes upon, to resist or support weights or strains, as sheet, shoar, beam cleats, etc.

Coamings.—Raised borders around the edges of hatches.

Deals.—(In carpentry.) The pieces of timber into which a log is cut up, usual dimensions $3'' \times 4'' \times 6'$.

Displacement.—The amount of water displaced by any floating body is called its displacement. In the case of ships it is generally expressed in tons, one ton of sea water being equal to 35 cubic feet, and one ton of fresh water being equal to 36 cubic feet.

The displacement of any floating body is equal to the weight of that body, and consequently the displacement of a ship is equal to the weight of the ship with everything on board.

Dowel.—A pin of wood or metal inserted in the edge or face of two boards or pieces, to secure them together.

Draft.—The depth from water-line to bottom of keel when vessel is afloat.

Draft Aft.—Draft measured at the stern.

Draft Extreme.—Draft measured to the lowest projecting portion of the vessel.

Draft Forward.—Draft measured at the bow.

Load Draft.—Draft at load displacement.

Mean Draft.—The average between draft measured at the bow and stern, or draft measured at the middle length.

Draught.—(Usually written draft.) The depth which a vessel or any floating object sinks into the water.

Dutchman.—(In mechanics.) A piece of like material with the structure, let into a slack place, to cover bad work.

Felloes.—The pieces of wood which form the rim of a wheel.

Flange.—A projection from an end, or part composing it, for the purpose of receiving, confining or of securing it to a support or to a second plate.

Furrings.—Strips of timber or boards fastened to frames, joists, etc., in order to bring their faces to the required shape or level.

Forward Perpendicular.—A line perpendicular to the keel line, and intersecting the forward side of the stem at the designed load water-line. This is known as F. P.

Mid Perpendicular.—A line perpendicular to the keel line taken midway between the forward perpendicular and after perpendicular. This is known as M. P.

After Perpendicular.—A line perpendicular to the keel line, drawn tangent to the after contour of the stern. This is known as A. P.

Length Between Perpendiculars.—The dimension used by naval architects in connection with the design of ships; it is measured from the ford perpendicular, or F. P., to the after perpendicular, or A. P.

Girth.—A band encircling a body. The measurement around the body of a ship; the half girth is taken from the center line of the keel to the upper deck beam end.

Grommet.—A wreath or ring of rope.

Harpings.—The fore part of the wales of a vessel which encompass her bows, and are fastened to the stern.

Hogging.—A term applied to the hull of a vessel when her ends drop below her center.

Horsing.—(In naval architecture.) Calking with a large maul or beetle.

Kerf.—Slit made by the cut of a saw.

Length Over All.—The length measured from a line perpendicular to the base line at forward side of the stem, to a line perpendicular to the base line and tangent to the after end of the stern.

Mitred.—(In mechanics.) Cut to an angle of 45° or two pieces joined so as to make a right angle.

Mold.—(In naval architecture.) Pieces of thin board cut to the lines of a vessel's timbers, etc.

Mortise.—A hole cut in any material to receive the end or tenon of another piece.

Mullion.—A vertical bar dividing the lights in a window.

Ogee.—A molding with a concave and convex outline, like an "S."

Pawl.—The catch which stops, falls or holds to a ratchet wheel.

Payed.—(Nautical.) Painted, tarred, or greased to resist moisture. Deck seams are payed by pouring melted pitch or marine glue into them after calking.

Peen.—The lesser head of a hammer, and is termed "ball" when it is spherical, "cross" when in the form of a round-edged ridge at right angles to the axis of the handle, and "straight" when like a ridge in the plane of the handle.

Purlin.—(In carpentry.) A piece of timber laid horizontal upon the rafters of a roof, to support the covering.

Rebate.—(In nautical architecture.) The grooves in the side of the keel for receiving the garboard strake of plank. (Commonly called rabbet.)

Riband.—A long, narrow, flexible piece of timber.

Sagging.—A term applied to the hull of a vessel when her center drops below her ends.

Scarf.—To join; to piece; to unite two pieces of timber at their ends by running the end of one over and upon the other, and bolting and securing them together.

Sheer.—The longitudinal curve of the rail, decks, etc., which shows the difference of height above water, or freeboard, at the stem and stern over that amidships.

Sheers.—Elevated spars connected at the upper ends, and used to elevate heavy bodies, as masts, etc.

Shim.—(In naval architecture.) A piece of wood or iron let into a slack place in a frame, plank or plate to fill out a fair surface or line.

Shoar.—An oblique brace, the upper end resting against the object to be supported.

Sholes.—Pieces of plank under the heels of shoars, etc.

Skeg.—The extreme after part of the keel of a vessel, the portion that supports the rudder post.

Specific Gravity.—The ratio of the weight of a given volume of any substance to the weight of an equal volume of distilled water, and is found by dividing the first weight by the second. Water weighs 62.4 pounds to the cubic foot, any substance, a cubic foot of which weighs less than this, has a specific gravity less than one, and will float in water, and any substance of greater weight per cubic foot has a specific gravity of more than one and will sink.

Strake.—A breadth of plank or plate forming part of the outside shell of a ship.

Swage.—To bear or force down. An instrument having a groove on its under side for the purpose of giving shape to any piece subjected to it when receiving a blow from a hammer.

Tenon.—The end of a piece of wood cut into the form of a rectangular prism, designed to be set into a cavity of a like form in another piece which is termed the mortise.

Templet.—A mold cut to an exact section of any piece or structure.

Tholes.—The pins in the gunwale of a boat which are used as rowlocks.

Thwarts.—The athwartship seats in a boat.

Treenails.—Wooden pins employed instead of nails or spikes to secure the planking of a vessel to the frames.

Trim.—The difference in draft at bow of a vessel from that at the stern.

Drag.—The designed excess in draft aft over that forward. This is little used in modern warships, though often found in yachts and other sailing vessels.

INDEX.

A

PAGE

Abbreviations 1
Addition 4
Acetylene welding 358
Air craft, insignia for 712
painting 711
Air ports, care in closing 90, 327, 331
Air testing compartments 538
Air tests, periodical 547
Ammunition lighters, painting 714
Anchor engine, instructions for operating 93
handling, modern battleship 95
Anchors, boat 151
Navy type 153
stockless 156
Annealing, brass and copper 685
steel and iron 673
Areas, squares, cubes, etc 68
Arithmetic 2
Artificer branch, pay and ratings 775
Asphalt cement 735, 745
Asphaltum solution 743
Ash, lumber 258
Auxiliary machinery 92

B

Barges, flag officer's, location of stars 184
Bells, ships and boat 171
Beech, lumber 259, 321
Birch, lumber 259, 321
Bitumastic compositions 718, 721
Blacksmiths, instructions for 647
questions for 679
tongs 676
tools, care of 650
required on ship 679
Blocks, chopping for wood, plan 248

PAGE
Board measure, tables and to calculate 262–263
Boats, small, carrying capacity 196–199
chain slings 199, 202
changes in status 204
for Naval Militia and Boy Scouts 192
general notes 181
loan of 184, 187
manufacture of 189
material of which made 207–209
Navy standard 177
nomenclature of parts 207–209
outfit 179–180
painting 707
plan of 30-foot motor sailing launch 210
repairing 192, 214
replacement of equipment 182
reports 203–206
requisitions for, not made 185
sizes of 178
standard weather cloths 185
to lay off planking of 213
to take spiling of planking 212
Bolting and riveting 380
for riveting oiltight work 406
Bolts and pins, backing out 375
Booms, proportions of 219
sketches of plan for laying out 220
Boot topping, paint 701, 738
Brads, standard sizes of 224
Brazing 530
Breaking strain and safe load, to calculate 66
Brushes, paint, care of 689, 751, 753, 762
to clean 689
Buoy, cork ring, life 112
position, plan 247
spar, anchor 246

C

Caisson, of dry dock 106
Calking around fittings 342
metal 342–353

PAGE
Calking oiltight work 343
tools, metal 343
wood 335
wood decks 215, 335
Cancellation 25
Capacity of tanks, to compute 60
Carpenter, U. S. Navy, qualifications for 777
Carpenter's Mates, instructions for 177
promotions for 775
questions for 326
Case hardening 674, 685, 686
Cedar, lumber 257, 303
Cement, bitumastic 745
instructions for applying 718
Portland 732
rivet, smoothing 745
Cements, formulæ for 745
Chain, anchor 655
boat 657
slings for 199–202
cable 655
making 653
material for 654
welding 654
Cherry, lumber 259
Chief Carpenter and Carpenter, duties of 326, 332
pay of 777
Chief Carpenter's Mate, qualifications for appointment 776
Circle, the, elements of 53–55
Cleaning metal surfaces before painting 691–692
ships bottom before painting 104, 746, 750
Clear hawse pendant 662
Coal, to find amount taken by change of draft 61
Coaling trucks, plan 249–251
Cofferdam for working below water-line 107
Colors, combinations of, to mix 756
Compartments, method of numbering 79
painting inside 715
testing with air 538
Compound or denominate numbers 10–22
Cone, pattern for making 62

PAGE
Cork painting 725
Cube root 44
Cubes, areas, etc. 68
Cypress, lumber 257, 297

D

Dado, finish in machinery space, painting 722
Deadweight, cargo ships 176
Decimal fractions 33
Decks, nomenclature of 82
graving pieces in 215
wood, laying 214
Definitions 777–783
Deterioration, to prevent 461
Dip-ropes 660
Displacement 73
Division 7
compound numbers 24
fractions 32
Docking and undocking ships in dry dock 101
Double bottoms, no cement to be used 733
precautions before entering 747
Draft, difference in sea and fresh water 76
marks and gages 83
painting 703
of ship, to read 85
Drainage 531
bilge 533
main 532
modern battleship 535
secondary 532, 536
Drawings, to read 108
Drills, tap, wire gage size for machine screws 435
for bolts and tap rivets 436
for standard pipe taps 473

E

Elbow, pattern for cutting from sheet metal 63
Enamel, white, paint 724, 740
Evergreens, lumber classifications 255–258

F

PAGE
Factors 25
Faying surfaces, treatment of 378, 461
Filler, hardwood, formula for 744, 755
Fir, lumber 256, 292
Fire, to build in forge 647
main, repairs to 567, 571
system 554
Fittings, pipe, cast iron 488
composition, low pressure 483
malleable iron 490
Flanges, pipe 495
Flexible paint, formula for 753
Floods, magazine and trimming tanks 552
Flushing system 557
by-pass 559
repairs to 567, 571
Fluxes 669
Forge, oil burning 648
portable 676
Forging, simple operations 651
Formulæ for various paints and cements 738, 745
mathematical 46
Fractions 27
Fresh water system 560
tanks 561
Fuel barges, painting 714
Furniture, finishing of 728
metal, care of 728, 754
oak and mahogany, to finish 754
to brighten up 755
to remove stains 755

G

Galvanic action 566
Galvanizing 167
Gasoline, hazards in handling 643
Gilding figure head 751
Glass, to drill 168
Gold size, formula for 751
to apply 751
leaf, laying on 751
Graining 727
Greatest common divisor 26

H

PAGE
Hackmatack, knees 323
Hardwoods, lumber classifications 258
Hasp and staple, plan 254
Hatching, Navy standard 109–111
Hemlock, lumber 256
Hickory, lumber 259
Hooks, chain, sketch 655
Hose fittings 507
threads, Navy standard 500, 515
valves 498
Hypothenuse 51, 62

I

Inflammable liquids, stowing 747
Internal draft gages 85

J

Joiner work 215, 239–244
metal behind, painting 727
painting 727
Joints, making up, for water and oil-tightness 86

L

Lead lined pipe, instructions for lining 567
unions for 576
pipe for lining 574
poison, precautions against 736
red, properties of 770
white, properties of 766–767
Leak stoppers, Colome's patent 114
Least common multiple 27
Linoleum cement, formula 745
to lay 729
Lumber, description of various kinds 255–260, 334
ash 258
beech 259, 321
birch 259, 321
board measure to compute and tables 262–263
cedar 257, 303
cherry 259

PAGE
Lumber, cypress 257, 297
defects, definitions of standard 264
evergreens 255
fir 256, 292
hackmatack knees 257, 323
hardwoods 258
hemlock 256
inspectors rules 264
lignum vitæ 260, 324
mahogany 260
maple 259, 321
oak 258, 310–321
pine, white 255, 268–283
yellow 255, 283–285
poplar 259
redwood 258, 307
rules for piling 260
shipping weights 263
spruce 256, 285–292
sycamore 259
teak 260, 325

M

Machinery and hull fittings, care in painting 693
Mahogany, lumber 260
Malleable iron fittings, pipe 490
flanges, pipe 495
Maple, lumber 259, 321
Material, shapes used in shipbuilding 430–432
Materials, strength of, table 65
weight of, table 67
Measure, tables of 11–14
Measurements, to calculate of stock for forgings 666
to take of pipe for fitting 469
Mensuration 49–59
Metal surfaces under linoleum, preparation of 729
Metals for forge work 647, 680
symbols for various 109
Metric system and approximate equivalents 12–22
Mirrors, silver plating 166
Money, tables and relative values 11

PAGE
Multiples 27
Multiplication 6
of fractions 31

N

Nails, standard sizes and dimensions 224–226
Notation and numeration 3

O

Oak, lumber 258, 310–321
Oars 244
Oil burning forges 648
stops 379
tanks, sounding and air escapes 552
tight joints 86
Oiling hoods and canvas 754
Oxy-Acetylene, welding and cutting 358

P

Paint, anticorrosive 694, 739
antifouling 694, 739
asphalt solution 743
bituminous compositions 718
black, formula 739
blue, formula 742
boot topping, formula 701, 738
brown, formula 739
brushes, care of 689, 751, 753, 762
cork 705, 725
drums, care of 748
flexible for canvas 753
green enamel, where applied 725
formula 741
light gray, formula 700, 740
materials, general information 757
miscellaneous formulæ 742
red lead, formula 738
properties of 770
simple tests 748
spar color, formula 738

PAGE
Paint, white enamel, formula 740
flat 740
glossed, where applied 724
inside, formula 740
outside, formula 738
yellow striping, formula 742
Painting, Admiral's quarters 725
air craft 711
boats 707
bottom of ship 694, 695
bow ornaments 703
brass work 715
Captain's quarters 725
chart house 724
double bottoms 716
draft marks 703
faying surfaces 378, 461
fire control towers 724
fire mains, standard colors for 731
fresh water tanks 718
galvanized fittings 691, 694, 699, 715
gaskets on watertight doors prohibited 693, 746
hardwoods 727
hull fittings 693
inside 715
outside 693
joiner doors 726
load marks 703
machinery 693
metal behind joiner work 727
decks, priming coat 704, 730
surfaces under linoleum 697
metal outside 693
piping, standard colors 730, 731
preparation of bottom before 694, 695
of surfaces for 691, 692
running light boxes 704
submarines 705
trimming tanks 718
wash strakes 726
water ways 704
zinc protectors, to be avoided 695, 704

PAGE
Paints and oils, simple tests for 748
approximate covering capacity and weights 737
inside, formulæ 740
outside, formulæ 738
striping, formulæ 741
Painters, instructions for 689
questions for 766
Pattern making 216
Paying shell, pitch ladle 252
Percentage 36
Pipe, brass, dimensions 477
bending 470
cutting and threading 469
fitting, glossary of terms, definitions 587
fittings, dimensions 485, 489, 494
fittings, making up 472
flanges, dimensions 496, 497
iron or steel, dimensions 481
standard dimensions 474
threads and dimensions 473
taps, drills for 473
Plimsoll mark 175
Plumbers and Fitters, instructions for 469
questions for 580
Plumbing system proper 563
Pneumatic hammers, care of 354
system 579
Portable fittings, care of 341
Pressure due to head of water, tables 72
Problems, practical 60–64, 66, 70–77
Promotion and pay, Artificer Branch 775, 777
Proportion 37
Protectors, steel, for sea chests 457–458
Pumping and drainage 531
Pumps, hand 535
Putty, to mix 743, 756

R

Red lead, see paints 738, 770
gun, its uses 341
Redwood, lumber 258, 307

PAGE
Rivet diameters 417
order sheet 415
rod and rivets, specifications 436
Rivets, burning to be avoided 380
length of 414
plate of standards 401–406
points of 407
spacing 386–390, 417–429
symbols of 408, 441–442
tap 377, 383
tables of efficiency 392–395
types of 381, 401–406
Riveting, general specifications for Navy 375
bolting up for oiltight work 406
oiltight work 387–389, 406
laps and straps 384, 387
workmanship 376
Rope, lubrication of 165
Navy standard, tables 159–164
Ropes, dip 660
Rubber gaskets, care of 91, 746
Rudder head, setting up on stuffing box of 373
Running light boxes, color, see painting 704

S

Saws, hand, filing 222
Scarfs, welding 672
wood 217
Screws, standard machine and tap drills 435
wood, dimensions 227
Scuppers 562
Sea valves 105, 374
care of in dry dock 105
Shapes used in shipbuilding 430–432
Sheaves, size of 165
Shell plate, practical method of laying off 374
Sheet iron and steel, gages and weights, table 433
Shellac 742
Ship's name, painting 703
Shipfitters, instruction for 341
questions for 459

PAGE
Shrinking 653
Solder, composition of and specifications 529
Soldering 525
iron to tin 526
Solids, to compute volumes 56–59
Sounding compartments 90
tubes 551, 552
Spar making 219
Specific gravity 73
Spruce, lumber 256, 285
Spruce poles, specifications 285
Square root 42
Squares, cubes, areas, etc 68
Stains for wood, formulæ for 743
Stand pipe, to compute height for given pressure 70
Steel, rivet rods and rivets for hull construction 436
structural, specifications 441–456
Steering engines and appliances 115–150
care and operation 148–150
Stock, to calculate for forgings 666
Stop waters 87, 379
Stops, oil-tight 87, 379
Strength of materials, table 65
Submarines, painting 705
Subtraction 5
of fractions 30
Sycamore, lumber 259

T

Tacks, standard sizes and dimensions, table 226
Tanks, feed water 552
fresh water 561
painting 718
gravity 561
to compute capacity of 60
Taps, standard machine for bolts and tap rivets 436, 439
for pipe 473
Teak, lumber 260, 325
Telemotors 123–148
Tempering tools 674
springs 675

PAGE
Tiling, foundation of 733
to lay 764
Tongs, blacksmiths 676
Tonnage, gross and net, cargo ships 175
Tons per inch immersion 75
Tools, carpenter's, elementary instruction in use 228–244
Torpedo-boats, paint for decks 704

V

Valves, grinding and reseating 523
hose, magazine flood, etc. 498
sea 105, 374, 552
Ventilation 99

W

Water barges, painting 715
closets 565
elements of 70
pressures due to head, table 72
Watertight doors, care of 91
testing 92
proper way to close and open 90
Weights of material, table 67
Weld, working the 670
Welding 668
oxy-acetylene process 358
heat to take 668
points, shapes of 671
White vessels, painting 702
Wiping joints 526
solder 527
Wood decks, painting under 215, 730

Z

Zinc, white, properties of the paint 767
Zincs, protectors on sea valves 457
not to be painted 458